ICELAND SPAR AND ITS INFLUENCE ON THE DEVELOPMENT OF SCIENCE AND TECHNOLOGY IN THE PERIOD 1780 – 1930: NOTES AND REFERENCES

LEÓ KRISTJÁNSSON
INSTITUTE OF EARTH SCIENCES
SCIENCE INSTITUTE
UNIVERSITY OF ICELAND

Fourth edition, September 2015

Fourth edition
September 2015
JH-2015-02

Summary

In 1668, King Frederik III of Denmark and Iceland ordered arrangements to be made for the collection of large transparent crystals which had been noted at a site on the Reydarfjördur fjord in Eastern Iceland. In the following year, R. Bartholin in Copenhagen published a 60-page booklet describing their properties. This booklet is generally acknowledged as a major milestone in the emergence of both crystallography and optics as scientific disciplines. Among the properties of Bartholin's material was the appearance of a double image when objects were viewed through it. A few decades later, this double refraction of the Icelandic crystals was discussed in treatises on light by C. Huygens (who considered light to be a wave motion in a very tenuous "aether") and I. Newton (who described it as a stream of emitted particles). Both realized that their theories had to be modified to account for the behavior of light in this material (a variety of calcite which came to be known as Iceland spar) and in other doubly refracting crystals such as quartz.

Not much happened in this field of optics during most of the 18th century. From about 1760 Iceland spar and other crystal forms of calcite played an increasingly important role in the development of crystallography (T. Bergman, R.J. Hauy, and many others). It also generated much interest among mineralogists, regarding for instance concepts like di- and isomorphism (E. Mitscherlich). D. Brewster demonstrated how certain optical characteristics of a mineral could help determining to which crystal class it belonged, and he also demonstrated the effect of stress on the optical properties of transparent solids.

Following sporadic publications after 1760 (such as by E. Malm, B. Martin, and G. Monge), Iceland spar revived general interest in theories of light around the turn of the century (e.g. R.J. Hauy, W. Wollaston, T. Young). E. Malus' observation in 1808 that light became "polarized" by reflection as well as by passage through Iceland spar, led to much new research on optical phenomena by brilliant scientists. The realization by Young and by Fresnel in 1817 that light had the character of a transverse wave opened up a new dimension in optics. Interference effects in polarized light, the polarization of sky light, and optical activity (rotation of the plane of polarization during the passage of light through various compounds) sparked additional interest. In the first half of the 19th century, observations on the polarization of radiated heat by Iceland spar and other means (J.E. Bérard, M. Melloni, J.D. Forbes) contributed to its acceptance as being of the same kind as visible light.

In 1820-50, much progress was made in the theory of elasticity and wave motion in matter (S.D. Poisson, C. Navier, A. Cauchy, G. Green, F.E. Neumann, J. MacCullagh, G.G. Stokes and others) but a reasonably satisfactory theory for propagation of purely transverse waves in the aether within material media was not developed until after 1880. Measurements of the refracting and reflecting properties of Iceland spar were made with increasing accuracy through the 19th century (e.g. by J. Grailich, A. Cornu, and R.T. Glazebrook), in order to test theoretical predictions by Huygens, Fresnel and others.

In optical research it was important to separate light vibrations distinctly into its orthogonal components. Attempts to do this included wedges specially cut from Iceland spar and quartz crystals (Rochon prisms, etc.), dichroic materials (chiefly tourmaline), and inclined piles of glass plates, but the winner was the compound Iceland spar prism invented by W. Nicol of Edinburgh in 1829. Nicol prisms in various modifications were subsequently incorporated into specialized optical instruments, the most common types being polariscopes or polarimeters (for analysis of elliptically polarized light, from about 1840), petrographic microscopes, and photometers, see below. These instruments were widely used by physicists and others studying fundamental questions of optics, interactions between light and matter, luminous phenomena, vision, etc.

Research on the optical activity of organic liquids and solutions which had been initiated by J.B. Biot before 1820, led to much new knowledge about these compounds, especially sugars and processes involving them (hydrolysis, fermentation, etc.). Further work in that field especially by L. Pasteur from 1848, later opened up a whole new branch of chemistry, stereochemistry. Polarimetric measurements continued to be of great value in studying the structure of many types of molecules, through the 19th and 20th centuries. They were also pivotal in early research on the kinetics of chemical reactions such as hydrolysis by acids and enzymes (L. Wilhelmy, L. Michaelis, H. Euler).

From the 1820s onwards, Iceland spar was important to the experimental and theoretical development of various aspects of anisotropy (i.e. directional dependence), which characterizes properties like hardness, thermal and electric conduction, electric and magnetic susceptibility, and elastic parameters of crystals. Here, the names of E. Mitscherlich, H. Senarmont, M. Faraday, H. Knoblauch, W. Thomson, W. Voigt and many other scientists may be mentioned.

Microscopical studies on crystals and thin sections of rocks, which utilized polarized light more and more after 1860 (H.C. Sorby, F. Zirkel, A. Des Cloizeaux, H. Rosenbusch, A. Michel-Lévy) revolutionized the fields of crystallography, mineralogy and petrology. Apart from Nicol prisms (in many modifications), Iceland spar was used in various accessories in this research, such as dichroscope prisms, Savart plates, Calderón plates, and later rotatable compensators. Several manufacturers of optical equipment developed standard petrographic microscopes as well as more specialized devices for mineralogy, incorporating these components. These microscopes also found a variety of uses in amateur science (from the 1840s), chemistry and chemical industries, agriculture, textiles, food science, biological research especially in histology (G. Valentin, T. Engelmann, W.J. Schmidt), and so on. Reflected-light microscopes, introduced after 1900 (by J. Königsberger, F.E. Wright and others, with later technical innovations by e.g. H. Schneiderhöhn and M. Berek) for studying properties of ore minerals and metals with the aid of Iceland spar prisms and accessories, became increasingly popular in the late 1920s and 1930s. Knowledge of crystal structures deduced from microscope observations has been central to many technical advances, e.g. metallurgy and in telecommunications.

M. Faraday's discovery in 1845 that magnetic fields could affect the state of polarization of light in transparent materials, demonstrated a link between magnetism and light and prompted further research into the magnetic properties of all matter. This was probably a factor influencing J.C. Maxwell in his development of an electromagnetic theory of light (early 1860's), and the acceptance of this theory by physicists may have been hastened by the discovery by J. Kerr of other electrical and magnetic effects on light in the mid-1870s. Polarization also was a key concept in research on scattering of light by particles, e.g. with respect to the blue color of the sky (J. Tyndall, Lord Rayleigh). Calcite prisms and lenses played a part in the development of atomic spectroscopy in the late 1800's, especially in the ultraviolet (W. Huggins, A. Cornu and others). Around the turn of the century, measurements of light polarization were important in the study of additional electro- and magneto-optical effects. These included the Zeeman effect (1896), which indicated that electrons were the chief emitters of light. It was later strongly involved in the application of quantum theory to atoms and molecules, as well as giving new insight into astrophysics. Several other polarization phenomena (found e.g. by A. Cotton and by J. Stark) also were useful in studies of atomic and molecular structure.

After 1865 the artificial generation of twinning and slip planes in Iceland spar by mechanical pressure, also increased the understanding of crystal physics. In crystallographic work on the various forms of calcite, however, specimens from other localities were studied in much more detail than Icelandic ones. Research on the etching effects of various fluids on surfaces of Iceland spar and other minerals (mostly after 1880), helped in research on symmetry of crystals.

Iceland spar was used considerably in the 19th and early 20th century as a source material in atomic weight determinations for calcium and in other chemical research. In investigations of the properties of X-rays, as well as in the use of X-rays to study crystal structure from 1913 to at least 1955, Iceland spar crystals (from Iceland and elsewhere) were used by many (such as M. Siegbahn, A.H. Compton) as a reference material for wavelengths because of their unusual purity and structural regularity. This research contributed to our knowledge of atomic structure and to the development of various aspects of modern physics such as quantum mechanics (e.g. the photoelectric effect) and relativity. Iceland spar crystals were also involved in the precise evaluation of fundamental quantities of physics including the electron charge and Planck's constant.

Among still other fields benefitting greatly from polarized light in the late 19th and early 20th centuries were studies of mechanical stress and strain (photoelasticity), of suspensions and colloids (nephelometry, flow birefringence), of the so-called liquid crystals, and of metal surfaces and thin films (ellipsometry). Observations on optical rotatory dispersion of various compounds, along with infra-red reflectance measurements (Reststrahlen method of H. Rubens) contributed to the understanding of molecular oscillations. High-speed light shutters incorporating Kerr cells and Nicol prisms were used for wireless transmission of pictures, precise measurements of the speed of light (from 1925), etc.

Nicol prisms also were an essential component of various photometers (for measuring light intensity) including spectrophotometers, from around 1860 to at least 1930. These instruments were developed by P. Glan, H. Wild, F.F. Martens and others. They were used in astronomy (F. Zöllner, E.C. Pickering) and in many fields of optics research, e.g. regarding emission and absorption of light (by E. Becquerel and others), fluorescence, and scattering. Later applications included in particular chemical analysis. Modified types of these instruments were useful in the science and technology of colors, photography and dyes, for measurements of high temperatures (H. Wanner), and in studies of visual perception (A. König).

For many decades, polarimeters were indeed standard equipment in chemical and biochemical laboratories, being especially important in the sugar industry. E. Fischer's research around 1900 on the structure of sugars, amino acids and other classes of organic molecules brought new understanding of their biological functions. It was followed by detailed studies on the structure of sugar molecules (W.N. Haworth, C.S. Hudson) and of complex ones like terpenes, proteins, enzymes, sterols, and nucleic acids. A. Werner's work on so-called coordination compounds which had great effect on inorganic chemistry, got crucial support from polarimetric observations. New knowledge on for instance alkaloids and glycosides obtained by polarimetry was valuable for pharmacology, as was knowledge of starch and other polysaccharides for food science and the fermentation industries. Information obtained on urinary glucose and on glycogen had direct effect on medical research into diabetes and its treatment. The use of essences from plants in food, medicaments, cosmetics and detergents was completely transformed by large-scale factory synthesis of their ingredients.

Almost all calcite used for optical research and instrumentation (and many of the crystals used in physical property studies) well into the 20th century seems to have been obtained from the single quarry at Helgustadir in Eastern Iceland. The cause of the exceptional size, lack of defects, and chemical purity of these crystals is connected with the presence of a Late Tertiary volcanic center in the area (mapped by G.P.L. Walker in the late 1950's). Probably, crystals were mostly picked from the soil or near-surface outcrops until the 1850's, when organized mining and exporting started. The heyday of activities was in 1863-72, when the quarry was leased by C.D. Tulinius, a merchant in Eskifjördur. The site was fully owned by the State from 1879. Extraction of crystals was only intermittent from 1873 until 1914, causing (after 1880) "famine" conditions for many scientists and instrument makers in need of the material. In Europe, much effort was spent on ways to economize in the use of Iceland spar and to discover or invent substitutes.

Apparently, new sources of optical crystals in commercial quantities were located in South Africa in the early 1920's, soon after the Icelandic government had re-opened the Helgustadir quarry at considerable expense. After 1925, not much optical-quality material seems to have been extracted there, but inferior calcite material from the tailings of the quarry was used extensively in a surface finish for buildings between the 1930's and early 1960's. A smaller calcite deposit at Hoffell in SE-Iceland was worked intermittently in 1911-39. The Helgustadir quarry and its immediate surroundings were declared a protected area by the Government of Iceland in 1975, including a ban on removal of mineral specimens.

"Polaroid" dichroic materials patented in the U.S. 1933 and later improved, greatly reduced the optical industry's dependence on calcite but the supply of optical-quality material was still insufficient for decades. The demand for the calcite crystals increased again after 1960, due among other things to the advent of lasers in optics research. Many deposits of Iceland spar are now being exploited commercially, e.g. in Russia, Southern Africa, Mexico, the U.S. and Brazil.

1 Introduction

Motto: *"…Iceland spar, this incomparable mineral… the cornerstone of our knowledge of crystal physics…" (Tschermak 1881, p. 101)*

1.1 On this compilation

At the farm Helgustadir north of the fjord Reydarfjördur in East Iceland there lies a small disused quarry. The word "quarry" seems appropriate here, as "mine" generally refers to underground workings. The quarry was for at least two and a half centuries the world's chief source of a certain variety of crystals of calcite ($CaCO_3$). By the late 18th century they were well known among mineralogists and collectors by the name Iceland spar (spath d'Islande), while Icelanders called them silfurberg (silvery rock).

Although the quarry has been protected by law since 1975, no one is taking care of it. In the recent geographical, historical and tourist literature about the region, it has generally only been stated in brief terms, that the crystals were exported for use in optical equipment or for displaying at mineralogical museums. Various quite inaccurate statements on these uses may also be found in the above type of literature, even up to the present day (section 40.4). Sporadic papers have described the nature of the quarry and of these crystals, including some by Th. Thoroddsen around 1900, a couple in the Journal of the Society of Engineers in Iceland (Eiriksson 1922) and in the natural history journal Nátturufraedingurinn (Thordarson 1945), etc. None of these publications quoted any other papers describing applications of the material.

I began in 1995 to study the history of the Helgustadir quarry and the crystals it produced. This came about while I stayed for a few months in Madison, Wisconsin where my wife had obtained a temporary academic position. The University of Wisconsin did not have facilities for the geophysical research that I have been carrying out here in Iceland. Instead, I decided to look up in the University's excellent libraries some information regarding past connections of Iceland with the history of the natural sciences, such as foreign scientific expeditions to the country and studies on its minerals. I soon came across references to Iceland spar in various 19th century journals in these libraries, and I have continued to collect them. The first brief paper describing my findings appeared in a symposium volume of the Icelandic Physical Society (Kristjansson 1996), and the first Icelandic edition of this report was issued by the Science Institute of the University of Iceland five years later (Kristjansson 2001a). A second edition of more than twice its size was prepared in 2007, and papers on various aspects of the Iceland spar story were published in the meantime (e.g. Kristjansson 2001b, 2002, 2003). The English version (Kristjansson 2010) of the report began as a translation of the 2007 edition, with new information, illustrations and references being added to most of its sections.

My knowledge on Iceland spar has been acquired in various ways: i) by photocopying papers (or parts of papers) in journals accessible in libraries. Again the University of Wisconsin libraries deserve special mention, as I have visited Madison six times after 1995. Other university libraries which I have found useful include those in Copenhagen, in Lund, and at the M.I.T. ii) by printing out papers that have been scanned and made available on the Internet. My prime source of this type since 2000 has been the website gallica.bnf.fr (operated by the French National Library); more recently this has been supplemented by the Internet Archive, Google Scholar, adsabs and Hathitrust sites. It has also been very helpful to be able to look up and download material from journals that their publishers or others have made freely available. iii) by ordering photocopies through inter-library loan services, mostly at the University of Iceland. iv) by purchasing books from antiquarian shops and dealers, largely through the Internet.

The period covered in this compilation is essentially from 1780 to 1930. My emphasis has been on the applications of Iceland spar in experiments and in optical instrumentation, and on the impact that these applications often had on the development of different fields within science and technology. Obtaining information on quarrying operations at Helgustadir and the recovery of Iceland spar crystals elsewhere has not been a priority. However, some notes on these aspects (based mostly on government documents accessible in the National Archive of Iceland, old newspaper items, and biographical accounts) appear in sections of the report. I have not looked for documentation on for instance the exporting of Iceland spar, the trade in these crystals, or the manufacture of instruments containing them. This awaits the appearance of historians interested in such subjects.

I wish here to express my thanks to Geirfinnur Jónsson and to my son Kristján for help in scanning pictures from various books and preparing them for my reports and papers. Kristján and his wife Hildigunnur Sverrisdóttir provided valuable assistance in the production of some of these pictures in A1 poster format, for an exhibition of 20 posters in the Askja building of the University of Iceland in 2005. Kristján also did the layout work for the second edition of the report in 2007. The layout of the third edition and the present one was mostly the responsibility of Frum ehf in Reykjavik, but some improvements were made by Kristján, also the cover design. My wife Elín Ólafsdóttir has furnished much information regarding in particular aspects of organic chemistry, biochemistry and medicine. The costs of these investigations have largely been carried by myself and by the Science Institute of the University of Iceland; contributions from various quarters towards for instance travel expenses have also been very helpful.

1.2 The impact of Iceland spar on the natural sciences

One main question to be answered by my compilation efforts, concerns the uses to which Iceland spar crystals, and equipment incorporating these, were put by scientists. Then, I try to assess the contribution that the resulting publications made to various fields of science. As mentioned above, the period covered is from 1780 to the 1920s, but many developments occurring in the preceding and succeeding decades are also mentioned. During this time, enormous progress has been made across a wide frontier of natural science and technology, and it has profoundly influenced the activities and environment of mankind.

Iceland spar crystals appear in surprisingly many different roles in this story, and were often essential to the success of experimental studies. As the term “Iceland spar” commonly has been used to designate large transparent crystals of calcite regardless of provenance, it is not always certain whether the crystals being described in particular instances came from Iceland. However, it seems that those from Iceland were of such superior quality, that scientists carrying out critical research would have been wasting their time using material from elsewhere. According to Klockmann (1903, p. 394) the fundamental (cleavage) rhombohedron is not commonly found, as it appears to crystallize only from very pure solutions, like at Helgustaðir. Accounts of experiments often merely state that such rhombohedra were being used, without giving their origin. However, some secondary sources such as the chapter in the major mineralogical work by Hintze (1930) where papers on the various properties of calcite are reviewed, occasionally assert that Icelandic crystals were involved even if that information is not provided in the primary publications.

The many roles of Iceland spar just mentioned may perhaps be split into three categories:

Firstly, very numerous experiments were made on, or with the aid of, Iceland spar crystals by themselves. Throughout the 19th century and later on (in X-ray work, etc.), some of these experiments created much interest and discussion, which directed the attention of scientists towards fundamental aspects of optics, crystallography, mineralogy, physics of the solid state, elasticity, and various other disciplines.

Second, calcite and Iceland spar in particular was a "type example" in theoretical work and education on important properties of crystals and their directional dependence (anisotropy), also on aspects of the nature of light, its properties and propagation.

Third, prisms from Iceland spar were a vital component in optical instruments of several kinds. Beginning around 1840, many thousands of these instruments were manufactured and purchased for the scientific study of a wide range of natural phenomena, as well as for practical applications in industry and technology.

With respect to these matters and particularly the third type of roles, it needs pointing out that physicists and chemists collect evidence on the nature of the material world by many different methods. They investigate how materials respond to applied pressure, temperature changes, electrical and magnetic fields, sound waves, chemical effects of other materials, and so on. However, the various uses of light may collectively represent the most efficient modern way of probing materials. The physicist can for this purpose change e.g. the intensity of the light or the length of a light pulse, the wavelength (color) of the light, or its angle of incidence on a material surface, in addition to studying light emitted by the material under various conditions. After 1810 the polarization properties of light, which were most conveniently investigated with the aid of Iceland spar prisms (especially Nicol prisms from c. 1840) turned out to be very sensitive to interactions with matter. These prisms have been used extensively in physics, chemistry and other fields of the natural sciences since then. Additionally, Iceland spar prisms were employed in devices for estimating semi-quantitatively light intensity, colors and temperature.

The raw material for the construction of these prisms and various other related components in optical equipment seems to have mostly originated at Helgustadir at least until 1900 (Appendix 1). It also seems that no single area became a larger supplier of large optical-quality calcite until after 1920. Some aspects of the operation of the Hoffell calcite mine have been described in print by the people involved, but the amount of crystals from there which eventually found their way into optical equipment is unknown.

Arguably, three naturally occurring minerals have been the most valuable ones in physics research during the last couple of centuries. These are diamond (due to its hardness and its optical and thermal properties), quartz (due also to its hardness, optical, elastic and electrical properties), and calcite (in particular Iceland spar) as will be explained in this report. The calcite however was mostly obtained from a single locality in the period covered in this report, while diamond and quartz crystals were found in many places. Excluding special cases such as ice, the list of other minerals of particular value to physics may include graphite, common salt, zinc sulfide, and mica.

1.3 On the references and the reference list

The list of references in this report is set up in a less formal or rigorous way than in most scientific journals. The report, although based on thousands of references, is in some ways incomplete and not historically precise. Many of these references I have come across by chance when looking for other references or just browsing, and they may not be the first or the most complete account of the topic referred to in the report. However, they always contain some pertinent information, and the reference list has been augmented by many notes on where supplementary material can be found. When one is living in Iceland, obtaining copies of papers from many old foreign publications can be a slow and expensive process. I keep very long lists of papers and books which might provide additional information about the many uses of Iceland spar, but that information is by now likely to be to a large extent "more of the same". One is also deterred somewhat by experience: many of the publications with promising titles which I have purchased in the hope of finding valuable new data or illustrative material regarding Iceland spar, have in fact turned out to contain little of relevance to my studies.

An enormous number of papers and books concerning the topics dealt with in this report (polarized light, double refraction, crystallography, etc., etc.) appeared in the period covered by the report. The reference list therefore only constitutes a very small subsample of all the publications available on these topics, but it hopefully conveys an idea of their great breadth. Many aspects of the story deserve closer attention by historians of science. Later accounts such as reviews or biographies do not always agree upon who was the first to introduce an idea, an instrument, or a method, or on what occasion this happened. I have not had the opportunity to follow up on most of such conflicting accounts, but advice from readers regarding corrections or additional material would be most appreciated.

In the 19th century it was quite common for the same scientific results to be reported through two or more different channels. Thus, an abbreviated version of a paper in Annales de Chimie et de Physique might appear in the Comptes Rendus of the Academy of Sciences, with translations following in Annalen der Physik, the Philosophical Magazine, the Edinburgh (New) Philosophical Journal, and so on. These accounts were sometimes published more or less simultaneously, while in other cases there were lag times of up to years. Years might also pass between the submission or reading of a paper at an academy or scientific society, and its publication in print. More abbreviated accounts (Referate, etc.) of the contents of papers in other journals commonly appeared for instance in Neues Jahrbuch für Mineralogie, Zeitschrift für Kristallographie, Naturwissenschaftliche Rundschau, Chemical News, and Bulletin de la Sociėté Chimique. Some journals issued special abstract volumes, including the Journal of the Chemical Society and Annalen der Physik (Beiblätter). As I have sometimes only had access to these secondary publications, the titles of articles are occasionally not given in the original language in the present list of references. For a more complete list of the various appearances of the same paper, the reader is referred to the great work "The Royal Society Catalogue of Scientific Papers 1800-1900".

The list of references also reflects to some extent a variable accessibility to journals. Thus, in general it has been easier to obtain articles published in the U.K., France, Germany and the U.S. than in for instance Italy or Russia. Furthermore, publications that only had a limited circulation will obviously be preserved only at few libraries and not be readily available for browsing. That is especially the case with some old journals catering to specific branches of science or of industry (meteorology, sugar production, photography, illumination, strength of materials, glassmaking, microscopy, brewing, physiology,…), manufacturers' equipment catalogs, journals published by amateur societies and regional academies, Festschrifts, and doctoral theses.

In spite of these shortcomings, I hope that the present work will give a reasonable insight into the enormously varied and often important applications of Iceland spar.

1.4 Expectations

Ever since I began presenting results from my studies on the valuable functions of Iceland spar, I have hoped that these results would spark related actions by others to terminate the decades-long neglect and ignorance in Iceland of the Helgustadir quarry. It has become more evident to me year by year, that the quarry is probably the world's single most important mineral locality, and that it has had a greater impact on human activities in the last two centuries than anything else happening in this country. For instance, the history of the quarry and of Iceland spar might be given some attention in the national educational system, in the tourist industry, as the basis of a local dedicated museum and permanent exhibition, as the subject of documentary films for international distribution, as a focus for geological and geochemical research in the surrounding area, and as a source of inspiration in design. The site is very accessible, being a short walk from a country road 10 km east of the town of Eskifjördur. It is not impossible that new occurrences of large calcite crystals remain to be discovered in areas of similar geological character in Iceland.

Unfortunately, most of the parties who might have the means of promoting such actions or who might benefit from them, have so far not shown much interest in the matter. The quarry has therefore languished as before. The only change at the site in the last decade has consisted in improvements of the local gravel road by the state Road Administration, with an accompanying expansion of a car-parking area and the erection of descriptive billboards.

2 On limestone, calcite, Iceland spar, and the Reydarfjördur volcanic center

2.1 Nomenclature

Rocks in the earth's crust generally consist of crystals of various minerals. Each type of rock, such as basalt, contains a characteristic set of minerals. Some of these minerals are primary, i.e. originating with the rock. Others may have been formed at a later date, during secondary alteration processes. A pure mineral can be composed of a single element (e.g. diamond) but most are chemical compounds of two to several elements. Natural minerals generally contain admixtures and impurities which may for instance change their color. At least 4000 minerals are known but the great majority occur very rarely: about 10 make up altogether 95% of the Earth's crust.

In the choice of a name for a mineral in the 18th century and earlier, the appearance and other properties of the respective crystals often played a part. The old expression "spar" or "spath" seems to have referred to minerals whose crystals could be easily cleaved, were light in color and lustrous. In the great French Encyclopaedia (published in 1751-80) the Swedish mineralogist Wallerius is said to have defined nine types of spar. Most minerals with -spar names are metal carbonates, but exceptions include fluorspar and the feldspar series.

Among the commonest crystalline materials in the crust are silica (silicon oxide, SiO_2) which includes quartz in its various modifications such as rock crystal, and calcium carbonate ($CaCO_3$) which crystallizes in two different ways (see section 5.3). The better-known of these two types was early on called carbonate of lime or calcareous spar, often abbreviated to calc-spar. In German the corresponding names were kohlensäure Kalkerde and Kalkspath (later: Kalkspat), in French chaux carbonatée or spath calcaire. The shorter name of calcite which was given to a rare mineral in 1836 (see Des Cloizeaux 1843) gradually became attached to this one. Limestone and chalk are names used in a wider sense to cover all kinds of rock formations from calcium carbonate, such as sediments composed of shells of marine organisms.

Silfurberg is the Icelandic name for calcium carbonate which in volcanic formations is generally formed as a secondary mineral during hydrothermal alteration. Large clear crystals of this mineral were called Iceland crystal in the 17th and 18th centuries, later Iceland spar (isländischer Doppelspat, spath d'Islande). In the late 20th century, the alternative term "optical calcite" has also often been used.

The characteristic crystalline form of Iceland spar is a rhombohedron, with sides in the shape of a parallelogram. The angles between the sides are 105°05' or 74°55' while the angles of each parallelogram are 101°55' and 78°05'. The density of pure calcite is 2.71029 g/cc according to the review by Birge (1941). The so-called Bravais-Miller axial ratio a/c is 0.8545 (Tutton 1922, p. 378), c being the symmetry axis.

2.2 The Reydarfjördur central volcano, and its Iceland spar deposit

The volcanic geology of Iceland (as now exposed above sea level), spans about 15 million years. Eruptions of these volcanics chiefly took place in so-called central volcano complexes. These are similar in character to those in the older Tertiary areas of the British Isles but smaller in size, of order 5-10 km. Each center may have been active for around half a million years. The geologist G.P.L. Walker (1959) who mapped the geological formations around Reydarfjördur, made the important observation that such volcanic centers occur in East Iceland. This had not been stated clearly before, and in fact Walker only mentions explicitly in a paper in the following year, that the eroded remains of one of these volcanoes are situated in Reydarfjördur. It is elongated north-south and spans the outer part of the fjord. A dike swarm belonging to this volcano can be traced to the nearby fjords Mjóifjördur to the north and Fáskrúdsfjördur in the south. Many sill-type intrusives are also noted within the Reydarfjördur volcano, being most dense in an area about 6 km across (Walker 1974).

The doctoral thesis of one of Walker's graduate students (Gibson 1963) deals with the Reydarfjördur volcano, but it does not cover the secondary alteration of its strata in any detail. Gibson only shows that the area of greatest alteration (propylitized zone) reaches the shore both at Helgustadir north of the fjord and on the south side of the fjord. Evidence of a caldera collapse, observed in many of the central volcanoes of Iceland, does not seem to have been noted in Reydarfjördur. The age of that central volcano may be estimated at some 11 million years.

In and around central volcanoes, advanced hydrothermal alteration has been caused by circulating hot water which dissolves some of the constituents of the rock and deposits them in cracks and vesicles elsewhere at lower temperature. The best-known minerals formed in this way in Iceland include zeolites and silica. The former belong to a large class of hydrated compounds of sodium, potassium and other metals, while the silica is usually in the form of opal, chalcedony and jasper rather than the transparent rock crystal variety. Calcite is also a common alteration mineral in Iceland, but its crystals are rarely pure or more than a couple of cm in size. Their growth has probably in most cases been irregular due to changes occurring in the chemistry, temperature and pressure of the geothermal fluids. However, in at least one locality in Reydarfjördur conditions have for a long period of time been stable enough for large, pure and regular crystals to form in cavities. They are often accompanied by the zeolite stilbite, also called desmin. The crystal deposit reached the surface in a small spot at 90-100 m above sea level east of the farm Helgustadir. Then a small brook gradually broke up this exposure and carried crystals with it down towards the sea shore.

3 Iceland spar attracts attention – developments to 1700 A.D.

3.1 Collection of minerals in past centuries – Ole Worm and Icelanders

In the 16th to 18th centuries it was popular among scholars as well as noble and wealthy persons, to collect beautiful works of art or handicraft, objects from distant lands, antique relics, and specimens from Nature. The last category included minerals and fossils, see the extensive compilation by Wilson (1994). Such collections were named "Kunstkammer" or "Naturalienkabinet". One, probably the largest in Europe, belonged to the Danish polymath Ole Worm who died in 1654. Among other things, Worm had contacts with several Icelanders who sent him collectible items (see Benediktsson 1948, Schepelern 1965-68, 1971), and much of their correspondence has survived. One of the Icelanders was Gisli (nicknamed "the Wise") Magnusson who was sheriff of the counties of central Eastern Iceland from 1649. Gisli had studied Natural History and stayed in Denmark, Leiden in the Netherlands, and England. He was very interested in various aspects of the geology of Iceland, such as the mining of sulfur (which was exported for use in gunpowder). It is quite possible that Gisli or others sent Ole Worm or his son Willum pieces of Iceland spar, but nothing definite about this can be gleaned from the above correspondence. It is also not mentioned specifically in other letters from Gisli that have been preserved, for instance to his son in Copenhagen 1669-70 (Benediktsson 1939). Worm had family connections with the Bartholins, whose generations of notable scholars included Rasmus Bartholin. As described in section 5.2, Rasmus Bartholin had lived in Leiden like Gisli the Wise. After the death of Ole Worm, his collection of minerals and other objects was acquired by King Frederik III who also had a keen interest in such matters.

By chance, one of the trading posts of the Danish monopoly trade with Iceland (instituted in 1602) was situated at the inlet Stóra-Breidavík in Reydarfjördur. The site, now occupied by the farm Útstekkur, is close to the Iceland spar outcrop of Helgustadir. It is then almost inevitable that local farmers and other persons crossing the brook below the outcrop would pick up crystal specimens and bring them to the attention of staff at the post. In the period 1662-83 one of the two Copenhagen merchants licenced to trade in Reydarfjördur was Christopher Hansen, who until 1664 served as one of the four mayors of that city. He was also the father-in-law of of the famous medical doctor and anatomist Thomas Bartholin, brother of Rasmus.

Contemporary accounts of how Iceland spar was transported abroad in the period 1600-1800 may exist in archives in Denmark and elsewhere, but I have not attempted searching for these. Paragraph 11 of a decree by Frederik III in 1662 which sets out conditions for the monopoly trade, states that: "…if Our envoys to Iceland recover sulfur, saltpeter, minerals or other ores which may be found there, the licencees are obliged to load these materials on to their vessels and transport

ERASMI BARTHOLINI

EXPERIMENTA
CRYSTALLI ISLANDICI
DISDIACLASTICI
Qvibus mira & inſolita
REFRACTIO
detegitur.

ANNO 1669.

HAFNIÆ,
Sumptibus DANIELIS PAULLI Reg. Bibl.

Reſkript til Kammer-Collegium, ang. Krystalbrydning i Island. Khavn 11. April 1668. — Siell. Tegn. XXXVIII, 409.

Frederik den Tredie &c. V. S. G. T. Voris naadigste Villie og Befaling er, at I udi sex Maaneders Tid til den islandske Krystal at udbryde antager og bestiller en Stenhuggersvend, og samme til maanedlig Besolding imidlertid lader bekomme 12 Rigsdaler; item en Mand til hannem om Maaneden 8 Rigsdaler; nok som vil behöves udi adskillige Maader til Arbeidet at fortsette, Penge 80 Rigsdaler; disligeste 6 Maaneders Proviant, nemlig en Skipper-Kost for Stenhuggeren selv og en Baadsmands-Kost imidlertid for den som hannem medfölger. Dermed &c. Hafn. 11. April 1668.

re, neqve imago in ſuperficie niſi remotione objecti vacillare; heic obſervavimus, unam ex dua-

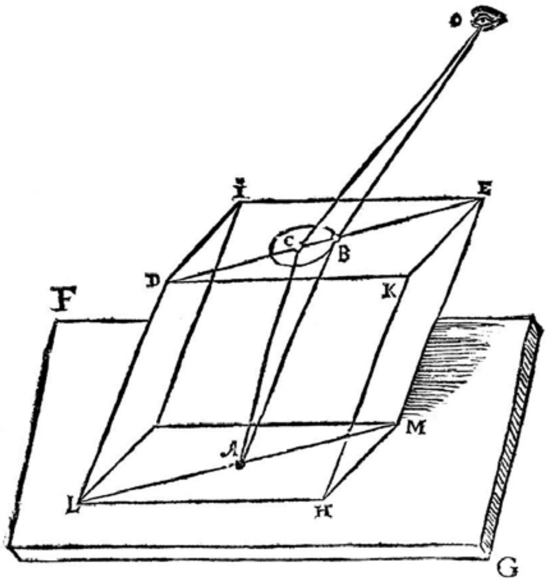

bus imaginibus eſſe mobilem: id qvod hac ratione indagare licet. In ſchemate præcedente,

C 3 ma-

remains unmoved. Wherefore in this Tranſparent-ſubſtance, the Image which appears fixt, may proceed according to the ordinary Laws of *Uſual* Refraction; but that, which moveth, and is carried about according to the motion of the Diaphanous Body, while the Object remains un-ſtirr'd, ſheweth an *Un-uſual* kind of Refraction, hitherto un-obſerved by *Dioptricians.*

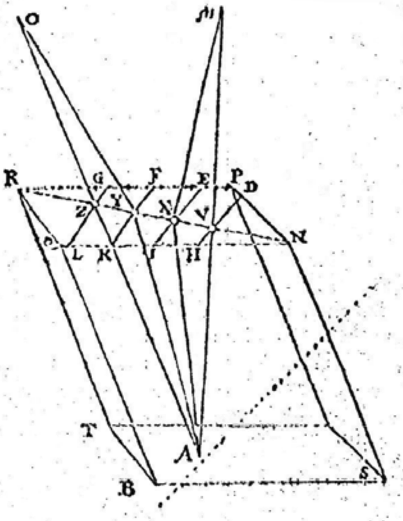

Hence, that I might examine the nature and difference of both, I put, upon ſome Object, as the point A, the Priſme of my Double-refracting Chryſtal N, P, R, Q, T, B, S; and the Eye M, being perpendicularly poſited over the upper plain of the Priſme N, P, R, Q, I noted, whether there was any Refraction of the point A, (for the *uſual* Laws of Refraction teach, that there is none.) But the Perpendicu-

Figure 3-1. *Top left*: The front page of R. Bartholin´s (1669) essay. *Right*: The text of a royal decree by Frederik III in 1668, on sending a stone mason to Iceland to recover crystals. *Bottom left*: A drawing from Bartholin (1669) showing how B, one image of the dot A, moves when an Iceland spar crystal is rotated about a vertical axis. *Right*: A description of Bartholin’s (1671) experiments in the Philosophical Transactions.

them hither at moderate cost". A similar condition may be found in a 1684 decree by Frederik's successor Christian V, when modifying the monopoly regulations: "…Minerals and other rarities… which may be found in the country, shall be …collected by them on Our behalf and transported hither at moderate cost".

3.2 The first records of Iceland spar – Rasmus Bartholin and his 1669 essay

The first document known with certainty to mention the Iceland spar deposit, is a decree by Frederik III in the spring of 1668 (Fig. 3-1). This document, the text of which was later (1853) included in the first volume of a collection of older legislation concerning Iceland, states that a stonemason and his assistant shall be sent for six months to collect "the Icelandic crystals". An accompanying letter quoted by Garboe (1918; Buchwald and Pedersen 1991) concerns procurement of tools for the stonemason. As indicated in the previous section, this matter must have had some events leading up to it.

Then the very important essay of Rasmus Bartholin (1669, Fig. 3-1 and 5-2) on the Iceland spar crystals was published in Copenhagen. Here he described his various observations on these, especially regarding their effects upon light rays. Bartholin had become professor of geometry in 1656 and of medicine in 1657. In the entry on him in the Danish Biographical Lexicon it is stated that his researches on the Icelandic crystals (apart from their optical properties) are important enough to place him alongside his countryman Steno as a founder of crystallography. This refers to the discovery by Steno (Niels Stensen), also made in 1669, that the angles between the crystal surfaces in hematite and quartz were constant during the growth of these crystals (see e.g. Flint 1971). Lang (1868) similarly argues that the origin of proper crystallographic research is tied to the discovery of Iceland spar.

At the time of these developments, some laws regarding the refraction of a light ray at a plane material surface were already known. Among these was the fact that both the refracted and the reflected ray lie in the plane of incidence, defined by the incoming ray and a normal to the surface. The so-called Snell's law which was probably discovered by W. Snell in 1621 and first published by R. Descartes in 1637, states that for a variable angle of incidence i of a ray from empty space, the angle of refraction b obeys the relation $\sin b = \sin i / n$. The constant n, known as the refractive index of that material, is about 1.33 for water and 1.5 for ordinary glass. n is also dependent on the color of the light, changing for instance in one type of glass from 1.508 for red light (700 nm wavelength) to 1.525 for violet light (400 nm). This dispersion property greatly puzzled scientists for more than two centuries.

The behavior of Iceland spar was at variance with the known laws, especially in that when a rhombohedron of this crystal was placed on a sheet of white paper with a black dot on it, two dots were seen (Fig. 3-1). Both appeared to lie within the crystal as happens in the case of water or glass, but one was higher than the other. When Bartholin rotated the crystal about a vertical axis, the upper image was fixed but the lower one rotated with the crystal. This was investigated by Bartholin in clever experiments. He showed that the path of light from the fixed dot agreed with Snell's law. A ray incident on the crystal thus was split in two, and the refraction of one of these was determined by the fundamental structure of the crystal (rather than, for instance, by its lateral dimensions or by reflections from some internal planes). This "double refraction" was a totally new phenomenon.

3.3 Research by C. Huygens, 1670-90

Bartholin's essay and samples of Iceland spar (Grew 1681, p. 309-310) reached the Royal Society of London. His extract of the essay was published in the Society's Philosophical Transactions (Bartholin 1671, Fig. 3-1) as well as elsewhere (see Romé Delisle 1772). In a short note in another journal in 1671 (see Garboe 1949), Bartholin pointed out the necessity for further research on the properties of Iceland spar. From his stay in Leiden, Rasmus Bartholin was acquainted with the Dutch physicist C. Huygens (Fig. 5-2), and sent Iceland spar crystals to him and to some other scholars (Garboe 1949). Huygens made (around 1677, according to Garboe 1959, p. 86 and Ziggelaar 1980) remarkable measurements on these crystals which are described in detail in one of the six chapters of his book on light. Huygens presented his findings to the French Academy of Sciences in 1679 (e.g. Bruhl-Metzger 1914) but the book (Huygens 1690) was not published until more than a decade later. Shapiro (1973) and Dijksterhuis (2004) who have studied the diaries and letters of Huygens, consider the double refraction to be the central theme of the book, and even a main reason for its being published.

Huygens imagined light to be a wave motion transmitted through matter as well as empty space, in a tenuous elastic substance called aether. Inside a body of matter, the properties of the aether were to some extent governed by that of the material. Among other 17th century scientists who supported such ideas, were R. Descartes (1596-1650), F.M. Grimaldi (1618-63) and R. Hooke (1635-1703). It was known that the speed of light was not infinite, after observations on the motion of Jupiter's moons made by O. Rømer (assistant and later son-in-law of R. Bartholin) were published in 1676. Every particle inside a material excited by light sends out a spherical aether wave. The combined emission of such waves by many particles can form a narrow ray of light or a wide wavefront, depending on circumstances. If a particle emitting a wave is at the plane interface between two media, two hemispherical waves will emanate from it. It is easy to deduce from Snell's law that the speed of light in a medium, and hence the radius of the hemispheres, varies as the inverse of the refractive index. Light therefore behaves differently from sound in that its speed is generally slower in dense materials than in materials of lower density. Another difference lies in the fact that sound waves are not dispersed appreciably, i.e. waves of low and high frequencies travel equally fast.

In his 1690 book, Huygens argued in clear terms for the very important hypothesis that in Iceland spar each excited particle emitted two waves. One of these was spherical and the other one was in the shape of an ellipsoid (Fig. 3-2 top), a surface generated by rotation of an ellipse around one of its two axes. The ellipsoid would be symmetrical about a particular direction in the crystal, i.e. that of the line (later called the optical axis) equidistant at about 45° from all three edges of the crystal where they meet at obtuse angles. According to modern measurements, the spherical wave corresponds to the refractive index $n_o = 1.658$ (o is for ordinary; the value applies to yellow light) while the other wave has a refractive index n_e (e for extraordinary) which is 1.486 at right angles to the optical axis and appears to vary from 1.486 to 1.658 depending on direction.

One thing noted by Huygens concerning light passing through a piece of Iceland spar, was that the crystal did not just separate the light ray into two fainter rays; a change in the character of the light also occurred. This could be appreciated by placing one piece of Iceland spar on top of another one with a dot underneath, and rotating the upper piece. The expected pattern of four still fainter but equal dots was not seen, cf. Fig. 3-2: instead the intensity of all the dots varied. Various other important observations and ideas concerning Iceland spar appear in the writings of Huygens (1690, and his correspondence), for instance his hypothesis that it is composed of small ellipsoidal particles (Fig. 3-2). Some of these ideas were not followed up until the 19th century.

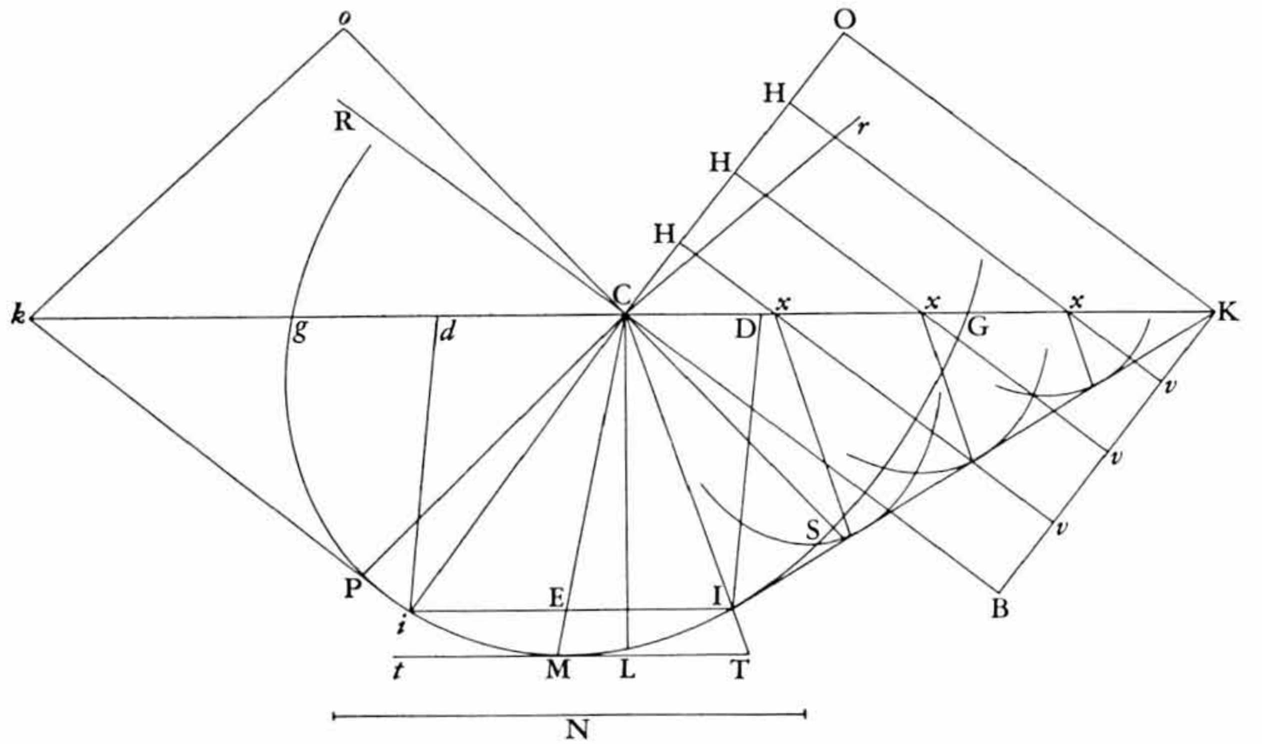

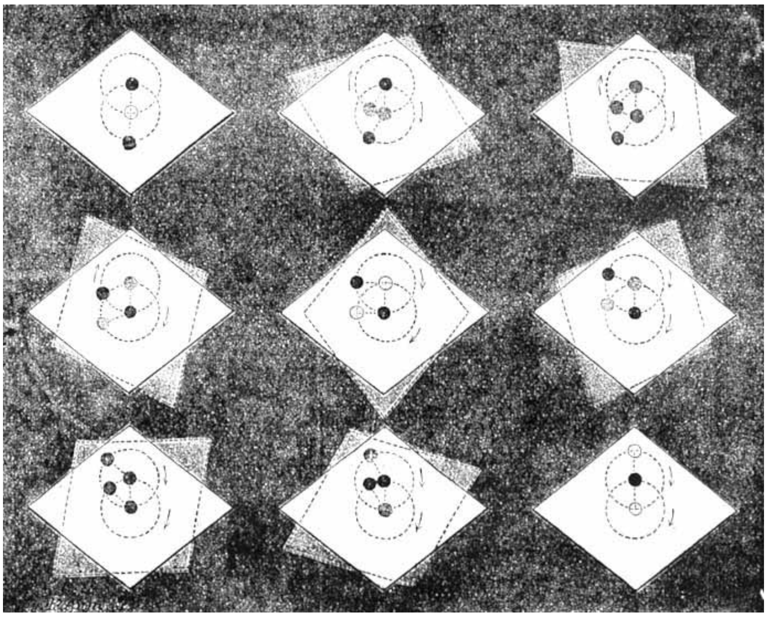

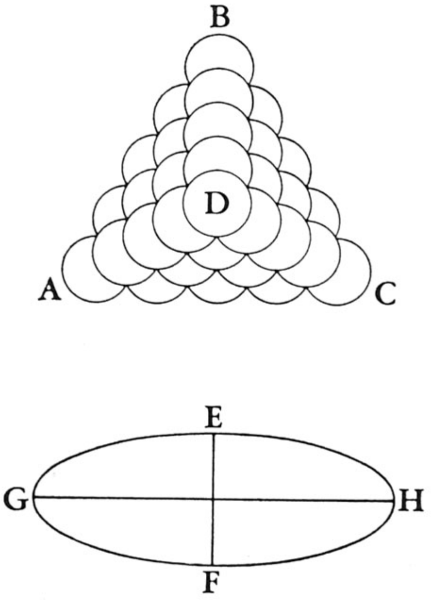

Figure 3-2. *Top*: A drawing by Huygens (1690) of a narrow light ray RC incident on the surface kCK of Iceland spar. It gives rise to an ellipsoidal wave inside the material, and so do also the rays Hx, Hx, Hx and OK from the same wave front. The ellipsoidal waves combine to form the (extraordinary) wave front SK which is their common tangent. *Bottom left*: A view of a dark dot on paper lying underneath two Iceland spar rhombs. In the first drawing, the rhombs have the same orientation. When Huygens rotated the upper one a half-turn in eight steps, he saw four or two dots of varying gray shades, and finally a single dark dot. From Paulsen (1893). *Right*: Huygens' drawing of the composition of Iceland spar from particles. Here they are shown as spheres but he in fact considered them to be ellipsoidal, formed by rotation about the diameter EF. He also draws attention to the threefold symmetry of an Iceland spar crystal about one of its corners. These diagrams are taken from a 1952 edition of an English translation of Huygens' book where they have been redrawn.

3.4 I. Newton, around 1700

Isaac Newton (1642-1727) in England had also carried out groundbreaking research on light, his results originally appearing in his book “Opticks” in 1704. He considered light to consist of particles that were emitted in straight lines away from any luminous body. He contemplated the presence of an aether which was different from that of Huygens, but his ideas on that subject mostly went unpublished. Newton (1706, and in later editions) discusses the properties of “Island Crystal”. It is not entirely clear from the text whether he himself had acquired specimens, but it is very likely that he obtained some from Huygens who visited England in 1689. During that visit, they both addressed a meeting at the Royal Society (Hall 1993, p. 131). Newton‘s contemporary, R. Cotes (1775) measured the density of Island crystal and many other materials around 1710.

In Opticks, Newton (1706) puts forward some numbered queries about the Icelandic crystals. One of these contains the suggestion that light particles may have two “sides” (cf. the two poles of a magnet) that are pulled in different measure to the sides of these crystals as they pass through. According to Newton, the speed of light-particles in a material increases in proportion to its refractive index. Thus, direct measurements of this speed in transparent materials could have decided between his ideas and those of Huygens, but techniques for making such measurements were not available until 1850.

Huygens and Newton were both aware of the fact that double refraction occurs in rock crystal. However, the difference between the ordinary and the extraordinary refractive index in quartz is small, only one-nineteenth of that in Iceland spar (i.e. less than 0.01 as compared to 0.17). This also applies to many other crystalline minerals. If the property had not been discovered in Bartholin’s crystals, it might not have been noticed until much later. Barnard (1863) says in a review article on optics that double refraction “…is exceedingly common…it is only in Iceland spar, however, that it manifests itself in a degree remarkable enough to attract attention…, and in most cases it can only be detected by special arrangements.”. Barnard also mentions the size and transparency of the spar crystals in this context.

4 Crystallography and optics, 1700-80

4.1 Not much happened regarding double refraction

During all of the 18th century and even into the 19th, most scholars did not question Newton's corpuscular theory of light, which is understandable in view of his stature in this and other fields of science. Apart from Newton's work, I have only come across one published essay from the early 18th century which discusses Iceland spar in any detail. This essay by la Hire (1710, see Buchwald 1980) describes its properties in comparison with a type of rock found in the Paris region, and recounts the observations of Bartholin and Huygens. A posthumously published work on medical remedies from the mineral kingdom by Geoffroy (1741, p. 90) who died in 1731, refers to Crystalli species rhomboidalis in Islandia insula & quibusdam in Galliae, mentioning its cleavage and double refraction. In an obituary of C.-F. de C. Dufay in the Mémoires of the French Academy for 1739 (p. 71-83), Dufay is said to have studied the refraction of light in cristal d'Islande, rock crystal and other transparent minerals. He was unable to complete these studies, but he had found that all crystals having 90° angles do not exhibit double refraction while others do. The abbot de Sauvage (1746, p. 729-731) includes a description of cristal d'Islande and its effects on light in a paper on the geology of the Languedoc province in France. The great Encyclopédie (Diderot 1754) devotes almost a whole page to Crystal d'Islande which seems well known to savants, and the authors assert that it is un spath calcaire.

Hill (1748, p. 333-335) describes the double refraction and other properties of a "hard, pellucid and colourless parallelopipedium, the Island crystal of authors" which is "a true and genuine spar....In Island, in the sides of the mountains, in which it is very plentiful, it is sometimes found in complex masses of great breadth, from ten to eighteen or twenty inches in length... ". A similar view probably originating from Grew (1681) echoes in the 1797 edition of Encyclopaedia Britannica (entry on Island Crystal, vol. 5): "...a mountain, not far from the bay of Roezfiord...has its whole outside made up of it..."

It is quite likely that the behavior of light in Iceland spar was by many considered an odd curiosity without a wider significance. Various other more general properties of light called for explanations, such as its dispersion, the absorption of different colors in materials, vision, the reflection of light from surfaces, light emission by hot bodies, fluorescence, etc. Perhaps the only well-known European scientist of the 18th century who favored the wave theory and Huygens' aether, was L. Euler (in his 1746 book Nova Theoria Lucis et Colorum quoted by Born and Wolf 1999, possibly again in 1769). He did not attract many followers (see Brougham 1803a) and he did not address the problem of double refraction. I have also noticed that Benjamin Franklin (cf. Physics Today, Oct. 2003) supported the wave theory.

The Latin thesis of E. Malm (1761, Fig. 4-1) at Uppsala described double refraction in Iceland

I. N. J.
DISSERTATIO GRADUALIS,
DE
REFRACTIONIBUS
CRYSTALLI
ISLANDICÆ,
QUAM,
CONSENT. AMPLISS. FACULT. PHILOSOPH.
IN REGIA ACADEMIA UPSALIENSI,
MODERANTE
MAG. SAMUELE
DURÆO,
PHYS. PROFESS. REG. ET ORD.
REG. ACAD. SCIENT. HOLM. MEMB.
PUBLICE VENTILANDAM EXHIBET,
ALUMNUS REGIUS,
ERICUS MALM,
SUDERMANNUS.
IN AUDITORIO GUSTAVIANO DIE X. JUNII.
ANNI MDCCLXI.
HORIS ANTE MERIDIEM CONSVETIS.

UPSALIÆ.

Von dem
die Bilder verdoppelnden ſogenannten
Isländiſchen Cryſtall,
oder
Doppelſpath.
von
J. E. Silberſchlag.
3te und 4te Tafel.

§. 1.

Der ſo genannte Isländiſche Cryſtall gehöret zu den Kalkſpathen, und iſt oft in einem hohen Grade durchſichtig, zuweilen aber nebelt ſein Glanz. Sein Körper ſtellt nicht nur im Ganzen ein rhomboidaliſches Prisma vor, ſondern er zerbricht auch in lauter kleinen Rhomboiden, nicht anders, als ob er aus lauter verſchobenen rautenförmigen Theilen zuſammengefüget wäre.

Bildet ſein Körper eine Rhomboide: ſo verſtehet es ſich von ſelbſt, daß ſeine einander gegenüberſtehende Seiten einander gleich, und jede ſeiner Flächen von zween ſtumpfen und eben ſo vielen ſpitzen Winkeln eingeſchloſſen ſeyn müſſe. Die ſtumpfen Winkel a b d und a c d haben insgemein 101 und die Spitzen b a c und c d b 79 Grad zum Maaße, Fig. 1.

II. Band. 2. Stück. A woven

TWO
ESSAYS
ON THE
NATURE and wonderful PROPERTIES
OF
Iſland CRYSTAL.

ESSAY I.

CONTAINING,
All that has been hitherto delivered in regard to its Form, Dimenſions, and double Refraction of Light; with the Addition of ſeveral New Experiments with poliſhed PARALLELOPIPEDS and PRISMS made of this Subſtance, which diſcover a *various, multuple, and colorific* REFRACTION; and exhibit a *Variety* of IMAGES of one and the ſame Object.

To which is ſubjoined,
A Computation of the magnifying Power of Reflecting Teleſcopes; and a Table thereof, from 6 Inches to 12 Feet in length.

The Whole illuſtrated with COPPER PLATE FIGURES.

By BENJAMIN MARTIN.

LONDON:
Printed for, and ſold by the AUTHOR, at No. 171, in
FLEET-STREET. Price 1s. 6d.

VARIÆ CRYSTALLORUM
FORMÆ,
A SPATHO ORTÆ,
EXPLICATÆ
A
TORBERNO BERGMAN,
CHEM. ET METALLURG. PROF. EQVIT. REG. ORD.
DE WASA.

Cryſtalli ſalinæ, lapideæ, pyritaceæ & metallicæ corporum geometricorum tantam primo intuitu offerunt varietatem, ut forma, modis fere infinitis multiplicata, nobiscum ludere videatur Natura. Hiſce vero ſingulis ſeduſo conſideratis compa-

Spathum calcareum, uti notum eſt, teſſera conſtat ſeu parallelepipedo obliquo, cujus omnia plana rhombeam habent figuram ejus indolis, ut anguli obtuſi gradibus $101\frac{1}{2}$, acuti vero ſinguli $78\frac{1}{2}$ ſint æquales. Diſpiciamus jam, quomodo ex hac, ſola parallelogrammorum ſimilium idonea accumulatione, cryſtalli generari poſſint diverſiſſimæ.

Figure 4-1. Pages from four publications on Iceland spar and optics in 1760-80. *Top*: The front pages of Malm's (1761) thesis and Martin's (1774) two essays on Iceland spar. *Bottom left*: A page from Silberschlag's (1787) paper. *Right*: Front page and a paragraph from Bergman's (1773) article on Iceland spar.

spar (Crystallus Islandica, Dubbelsten in Swedish), but it is brief and to me does not appear to contain new discoveries. At a similar time G. Beccaria (1762, 1772) investigated this phenomenon in quartz. He was familiar with the works of Huygens and Newton on the subject, and he probably had some Iceland spar for comparison. Hill (1772) has observed double refraction in all kinds of spar, while he claims that quartz only distorts an image. His booklet is the earliest source of the expression "Iceland spar" in English that has come to my attention.

The next one to write about double refraction was the versatile instrument dealer B. Martin in London. He invented and constructed various optical devices, in addition to much writing and lecturing about science. See Williams (1863) and Moe (1990, in particular p. 103-110). Martin (1774) published a leaflet containing two essays on the remarkable optical properties of Island Crystal, cf. Fig. 4-1. The essays describe his experiments on these crystals, including the making of a lens with two focal points. Martin's work on Iceland spar does not seem to have been much noticed among his contemporaries (Brewster 1822-23), but Rochon (1783) describes a similar lens made of cristal d'Islande. Martin mentions that calcite crystals are commonly found in the county of Derbyshire (but their forms are different from those in Iceland, see Naumann 1885).

Soon after Martin's essays appeared, O. Olavius travelled around Iceland to observe the state of its economy, visiting the Helgustadir crystal site in 1776. In his report (Olavius 1780) which was for instance published in German in 1787 and 1805, he states that people have often attempted excavating this mineral (Doppel-stein), but no pieces weighing more than 10 pounds have been recovered. With the help of others he managed to collect one of 42 pounds. Olavius recounts some earlier ideas about using Icelandic decorative stones in altar pieces, and suggests that Iceland spar might be embedded in the walls of royal palaces. Another traveller on a similar mission, N. Mohr, inspected this source of Dobbelt-spat in 1781. Older Danish versions of that expression have recently come to the author's attention. One is Isländischer doppelt Spath in a Verzeichniss von einer Sammlung allerhand Naturalien (preserved in the Bayerische Staatsbibliothek), auctioned in Copenhagen in 1765. A 1778 letter from the sheriff B. Einarsson in Northwest Iceland mentions klardobbeltspat, i.e. clear double spar. See an account by L. Björnsson in the 1981 Yearbook of the Ísafjörður Historical Society, p. 133-137.

The oldest German examples of the word Doppelspath that I have come across, are in Pasquay's (1777) catalog which also uses Doppelstein and Doppelcristall, and in Gerhard's (1782) book on minerals. In 1783 a piece of Icelandic Doppelspath of 12" by 5" size (in a collection in London) is mentioned in vol. 10 of J. Bernoulli's compilation of travel accounts. I have also seen a paper on Iceland spar (Silberschlag 1787) where it is called Isländischer Crystall (Fig. 4-1) and Isländischer Spath. That author has clearly been able to carry out his own experiments on specimens, and among other things he concludes that the double refraction is not caused by internal reflections. Chemnitz (1799) in Copenhagen who had supplied Silberschlag with samples, writes in 1794 that the largest, purest and most excellent pieces of Doppelspath are found in Iceland, notably in Reydarfjördur.

Newton's Opticks was translated into French in 1787 by J.-P. Marat, better known for his participation in the Revolution. Marat himself wrote a book on the subject published in the following year, but it does not mention double refraction. In the manuscripts of the famous chemist A. Lavoisier it is mentioned that cristal d'Islande, also called spath parallélogrammatique, was one of the compounds which he attempted to heat using sunlight and a converging lens in 1772-73. In a description of geological phenomena in the Pyrenees published in 1786, Baron de Dietrich refers to an older pamphlet which states that spath d'Islande has been found there.

Finally, Count Buffon's (1786) book on the natural history of minerals contains a section on Bartholin's studies and some observations made by Buffon himself on cristal d'Islande or spath d'Islande. Buchwald (1980) states that Buffon did not grasp the significance of Huygens' research on its double refraction, and a hypothesis on the subject which Buffon put forward, was soon forgotten (Bruhl-Metzger 1914). The same may apply to ideas presented by Link (1797). One of the founders of the École Polytechnique in Paris, G. Monge (1789?) who is best known for his contributions to mathematics, described a curious optical effect observed in Iceland spar crystals.

4.2 Crystallography, to 1780

Following the 1669 publications by Stensen and Bartholin on what Lima-de-Faria (1990) calls "the first important experimental discoveries in crystallography", new ideas about chemical compounds, crystals, minerals and rocks gradually emerged. These developments are dealt with in various books on the history of these fields in science, but here I am only going to mention a few points.

One of the main tasks of research in the natural sciences, is the classification of related subjects according to some rational system. By the middle of the 18th century C. von Linné had created such schemes for the animal and vegetable kingdoms, and attempts to set up analogous ones for the inanimate worlds of elements, compounds, crystals, minerals, fossils etc. could be expected. Linné himself (around 1735, according to Jong and Stradner 1954-56) divided crystals into classes depending on their external forms, constructed wooden models of them, and published accurate drawings of crystals. His works influenced many later scholars. Linné (1748, p. 153) assigns Spatum compactum subfissile, pellucidum objecta duplicans to the order of Calcarii, and gives its Swedish name as Islands crystall. Two of Linné's countrymen who describe the Icelandic type of calcite (Wallerius 1750, Cronstedt 1758) quote the above names as well as Dubbelsten and Spatum Islandicum. The crystals from Iceland are also mentioned in several mineralogical publications in the period 1760-90. A few examples are given below; some others merely quote previous sources.

Westfeld (1767, see Lima-de-Faria 1990, p.7) and Bergman (1773, based on observations by J.S. Gahn; Fig. 4-1) put forward hypotheses on the structure of calcite crystals. They envisaged these to be composed of layers of rhomboeders around a small nucleus, even if the crystal itself had a different form (scalenohedral, see later). Gahn was clearly familiar with Iceland spar (cf. Cuvier 1829, p. clvi). So was Westfeld who mentions the purity, transparency and double refraction of the "isländische Krystall". Writings by Bergman (1762, 1763) on its electrical properties have survived. Wyckoff (1922, p. 1) considers Bergman to have "developed what might be called the first geometrical theory of crystal structure". A chemical analysis by Bergman in 1774 (quoted by Hauy 1801 and Hintze 1930) indicated that calcite contains 11% of water which is of course incorrect; his results may refer for instance to sinter from carbonate-rich springs which are well known in the Snaefellsnes peninsula of Western Iceland (cf. correspondence printed in U. von Troil's contemporary travel account from Iceland).

Romé Delisle (1772) states that le Spath rhomboidal, doublant les objets is commonly known as cristal d'Islande. Werner (1774) and Romé Delisle (1783, vol. 1, p. 497-503) discuss the optical properties of this Doppelspat at some length. A sentence in the chapter on Calx in Bergman's (1782) book on minerals begins "Rarissime omne desideratur martiale, quo etiam contaminatum clarissimum spathum Islandicum…".

5 Crystallographic research by Abbé Hauy and others, 1780-1830

5.1 Introduction

Around 1780 a major step forward in crystallographic science was taken when A. Carangeot constructed an instrument for measuring angles between crystal faces. This "contact goniometer" had arms which could be aligned with the faces. On the basis of Carangeot's measurements, Romé Delisle (1783) suggested that Stensen's 1669 hypothesis on the constancy of angles in quartz could be extended to all crystals.

A gradual change took place in attitudes to fossils, crystals and minerals (Wilson 1994), as emphasis moved from individual large-scale collectors to scientists and to public museums and exhibits. At that point in time also, the first societies and learned journals dedicated to minerals were born. The latter part of the 18th century saw a great increase in the number of mineral purveyors living in the vicinity of rich occurrences. Mineral dealers also became numerous, for instance in cities like Vienna.

Chemists such as M.H. Klaproth and C.F. Bucholz in Germany, L.N. Vauquelin and J. Proust in France and J.J. Berzelius in Sweden had by 1800 perfected methods for analyzing minerals and rocks, which led to the discovery of many new elements. Analyses on calcite and/or aragonite may have been carried out by Klaproth or Proust around 1800 (see e.g. Ann. Chim. 58, p. 209, 1806) but they seem to have been presented only in qualitative terms. The earliest quantitative results I have been able to locate are those by Phillips (1803), Fourcroy and Vauquelin (1804), Bucholz (1805) and Thenard and Biot (1807), cf. section 5.3 and Appendix 2. From their data, people presumably realized that Iceland spar was calcium carbonate of unusual purity.

5.2 Research by Hauy and others on crystals, 1780-1805

The beginning of a period of major progress in crystallography and optics may be marked by a single chance event, similar to the fall of Newton's proverbial apple. The abbot R.J. Hauy (see Fig. 5-2 where he appears to be holding a rhombohedron of Iceland spar) who was a keen collector of minerals, was one day in 1779 handling a cluster of calcite crystals at his friend's house. He accidentally dropped the cluster on the floor and it broke into pieces. Hauy then noticed that the angles between surfaces of these pieces were similar to those of Iceland spar, and cried: "Tout est trouvé!" (Cuvier 1829, Fig. 5-1). The simple characteristic form of the Icelandic crystals (which was rarely seen in calcite from elsewhere), had to be the fundamental one for all calcite crystals, in spite of their very diverse appearances (Fig. 5-1, top). This story indicates that Hauy was already familiar with Iceland spar. Measurements of the angles of the above-mentioned fragments, as well

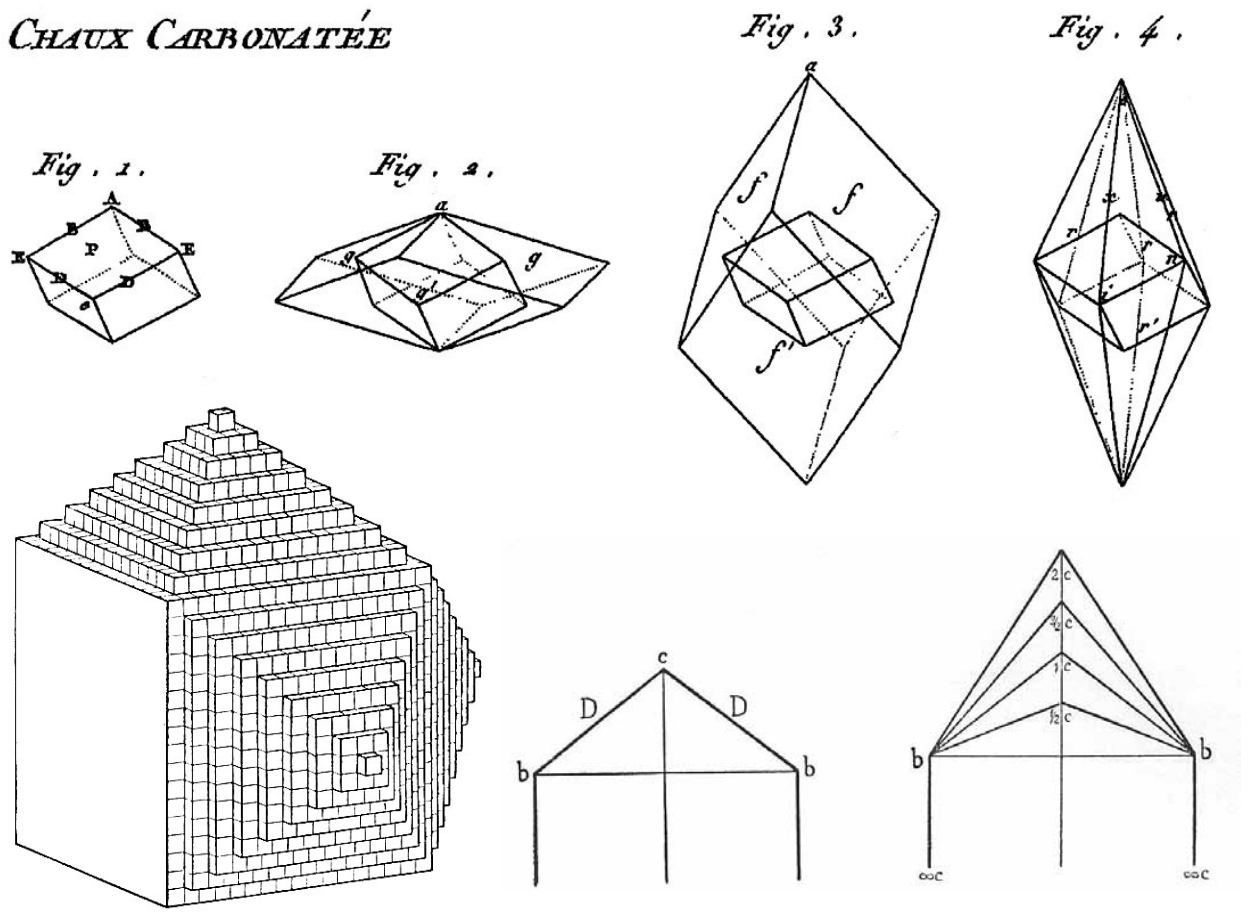

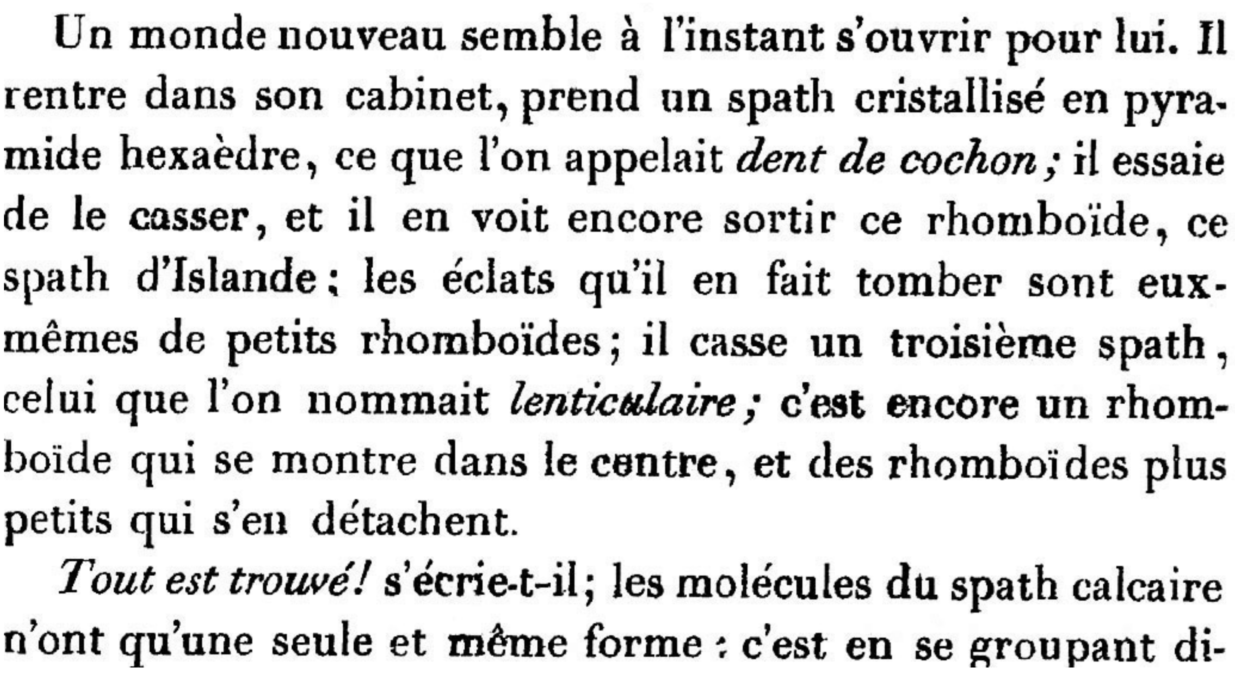

Un monde nouveau semble à l'instant s'ouvrir pour lui. Il rentre dans son cabinet, prend un spath cristallisé en pyramide hexaèdre, ce que l'on appelait *dent de cochon;* il essaie de le casser, et il en voit encore sortir ce rhomboïde, ce spath d'Islande; les éclats qu'il en fait tomber sont eux-mêmes de petits rhomboïdes; il casse un troisième spath, celui que l'on nommait *lenticulaire;* c'est encore un rhomboïde qui se montre dans le centre, et des rhomboïdes plus petits qui s'en détachent.

Tout est trouvé! s'écrie-t-il; les molécules du spath calcaire n'ont qu'une seule et même forme: c'est en se groupant di-

Figure 5-1. *Top*: Part of a series of diagrams on calcite crystals, from Hauy's (1801) book. *Center*: Hauy's suggestion that a crystal grows in steps. The slope of a side in a cubical crystal can only have a value of a or a(n/m) where n and m are (usually small) integers. In two of the diagrams the slope of the pyramidal sides is 1 but in the right-hand one the possible sides with slopes 1/2, 3/2 and 2 are also shown. *Bottom*: A famous anecdote published in the obituary of Hauy by Cuvier (1829). It describes his reactions when he accidentally broke a group of calcite crystals and noted that the pieces had the same form as the one prevailing in Iceland spar.

as on pieces from other crystals that he smashed or split deliberately, confirmed his conclusion (see Hauy 1784, 1793b, p. 228-232). From then on his work was mainly concerned with crystals and minerals.

Among the many scientific publications of Hauy, at least two deal specifically with Iceland spar. In one of these (Hauy 1782) which treats its crystallographic properties, he uses the expression "spath d'Islande". Other papers by Hauy (1788, 1792) on Iceland spar describe aspects of its double refraction in considerable detail. A lengthy section on Iceland spar may also be found in vol. 2 of Hauy's (1801) great work on mineralogy. T. Young (1802, p. 45, 1809) states that Hauy's refraction experiments on Iceland spar supported the wave theory of Huygens rather than Newton´s corpuscular theory of light, but not all of Hauy's results were correct (Buchwald 1989, p. 9-18). His writings on the subject were also unclear (see Gillispie 1997) and his refraction research did not lead to new discoveries (American Mineralogist 1918, p. 117). Hauy (1801) claimed to have found double refraction in 20 minerals (quoted by Brewster 1823; see also Hauy 1793a). His textbook on physics (Hauy 1803) which was no doubt read by many, also contains sections on crystals and on the refraction of light in Iceland spar.

Hauy experienced his share of hardships in the troubled times following the Revolution of 1789. Later, the authorities became generous to scientists and the French made great progress in various fields of the natural sciences. Many honours were bestowed upon Hauy, as may be seen in the biographical literature, for instance Cuvier (1829; American Mineralogist 1918). He is often called the "father of crystallography" and he had a huge collection of mineral specimens.

It has been debated by historians of the subject whether Hauy was aware of the previous work of T. Bergman (Dictionary of Scientific Biography 1980-90), but Hintze (1930, p. 2897) considers that "with his studies of calcite, Hauy founded mathematical crystallography". One of his main discoveries (Hauy 1796, 1801) concerns what has been called "the law of rational proportions". It implies that the surfaces of crystals are either completely plane (i.e. cleavage surfaces) or that they are formed by microscopic steps. These steps are built up from cells (molécules integrantes) arranged in a regular fashion, for instance one step up for one step along (as on the cubical kernel in Fig. 5-1), or one step up for two steps along, etc. Another way of expressing this law was put forward by Weiss (1804).

5.3 More on crystallography: Hauy and others 1805-22

Early on, Hauy (1785) began studying the electrification of crystals and other substances caused by friction, pressure, and heating. Later he found (Hauy 1817) that Iceland spar (already investigated with respect to these properties by T. Bergman and others) acquired by rubbing and compression a greater electrical charge than most other materials, and kept it for longer periods. Hauy´s research was continued (from 1820 or earlier) by a young scientist, A.C. Becquerel (1823, 1827) who investigated the electrical behavior of various substances including Iceland spar (see Dictionary of Scientific Biography 1980-90). He made significant discoveries in this field, but Iceland spar turned out to be much less interesting in this regard than for instance quartz. See also section 9.2.

J.J. Bernhardi (1807) wrote a paper on double refraction in many materials, criticizing some points made by Hauy. He says that Iceland spar is well known and very suitable for research on this phenomenon, whereas the available specimens of other crystal types tend to be too small, irregular, or insufficiently transparent. He stresses the role of a direction of symmetry which he calls "Lichtaxe" and which later acquired the name "optical axis" in English. Bernhardi (1808b) also discusses the surfaces and cleavage directions of calcite, including his "purest pieces of Icelandic Doppelspath". Bernhardi (1808a) was the first to divide crystals into six groups (now called sys-

Figure 5-2. Four of the first and most distinguished scientists who carried out research on Iceland spar and polarized light. *Top left*: R. Bartholin (1625-1698). *Right*: C. Huygens (1629-1695). *Bottom left*: R.J. Hauy (1743-1822). *Right*: E.L. Malus (1775-1812). The portrait of Bartholin is taken from the 1991 facsimile edition by the Copenhagen University Library of his Iceland spar essay, but others in this report are mostly obtained from collections on Internet websites.

tems) depending on their geometrical properties, but Weiss (1815) preferred splitting one of these groups in two. They are still in use, each system being later subdivided into two to seven so-called symmetry classes or point groups, a total of 32. One of the systems is the cubic or regular one, and Bernhardi states that all minerals belonging to it which he knows of do not exhibit double refraction (as was in fact also observed by C. Dufay before 1739) nor do they have an optical axis. Weiss (1811), Cauchy (1813) and Hauy (1815) also realized that geometrical symmetry constituted an important aspect of the structure of crystals. Seeber (1824) further emphasized that repetition or periodicity was another major factor in that structure. Seeber used calcite crystals as a particular example in his paper, which has later been acknowledged to be one of the milestones in the development of geometrical crystallography (Lima-de-Faria 1990, p. 47).

Hauy (1801) had expressed clearly in his mineralogy a rule to the effect that each crystal species is distinguished from all others by the unique form of its fundamental cells. The regular polyhedra such as the cube were an exception from the rule. However, later findings showed Hauy to have erred here on two counts, and in both cases Iceland spar was involved in these findings. First, chemists (e.g. Fourcroy and Vauquelin 1804) demonstrated shortly after Hauy's proclamation, that the common mineral aragonite had the same chemical composition as pure calcite, namely $CaCO_3$. Yet their crystal structures are quite different (Bournon 1808), and so are their refractive indices, densities and other physical properties. This caused great puzzlement until around 1820 (see a comprehensive review by Arzruni 1893, p. 22-36). Some people (e.g. Stromeyer 1813, 1814) suggested that the differences were caused by the aragonite containing some strontium or water, but that explanation had already been discounted by Thenard and Biot (1809) who analysed aragonite from Auvergne and Iceland spar. See Gay-Lussac (1816) and Rose (1864); the story continues in the next two sections.

5.4 Dimorphous compounds, 1823-40 and later

E. Mitscherlich (1823, see Rose 1864) then observed that substances other than calcium carbonate, even pure elements like sulfur, could crystallize in two ways. The name "dimorphism" was coined to describe this behavior. Calcium carbonate was in fact later found to exist in a third modification called vaterite, but it is quite rare. Mitscherlich (1831) pointed out that aragonite becomes unstable on heating and is converted to calcite. Subsequent research confirmed that this happens at around 400°C.

Various experiments were carried out on dimorphous materials, in order to ascertain the causes of the phenomenon. In the case of calcium carbonate, it was found that the ambient temperature, pressure of CO_2 and other conditions determined whether calcite or aragonite crystallized from a solution, see for instance Rose (1837) and Credner (1870). According to further experimental work, these parameters also decide the form of the crystals in the case of calcite (Kostov 1968, Fig. 5-3 bottom; Kostov and Kostov 1999). Investigators studied thoroughly the influence of other compounds (Lösungsgenossen) in the carbonate solution, for instance Credner (1870) and Vater (1893, 1899) both of whom used Iceland spar in some of their experiments. Hintze (1930, p. 2819) quotes research indicating that the carbonate has to be very pure for the Icelandic form (Spaltungsrhomboeder) to be precipitated. In the 20th century it was established that the size of the metal ion relative to the CO_3-ion decides to which crystal system the carbonate will belong. When the former is small, the carbonate crystallizes in the same system as calcite; when it is large the carbonate chooses to crystallize like aragonite. The calcium ion is a boundary case, which according to Kostov (1968) also causes calcite to exhibit a greater variety of crystal forms (Fig. 5-3, top) than any other mineral.

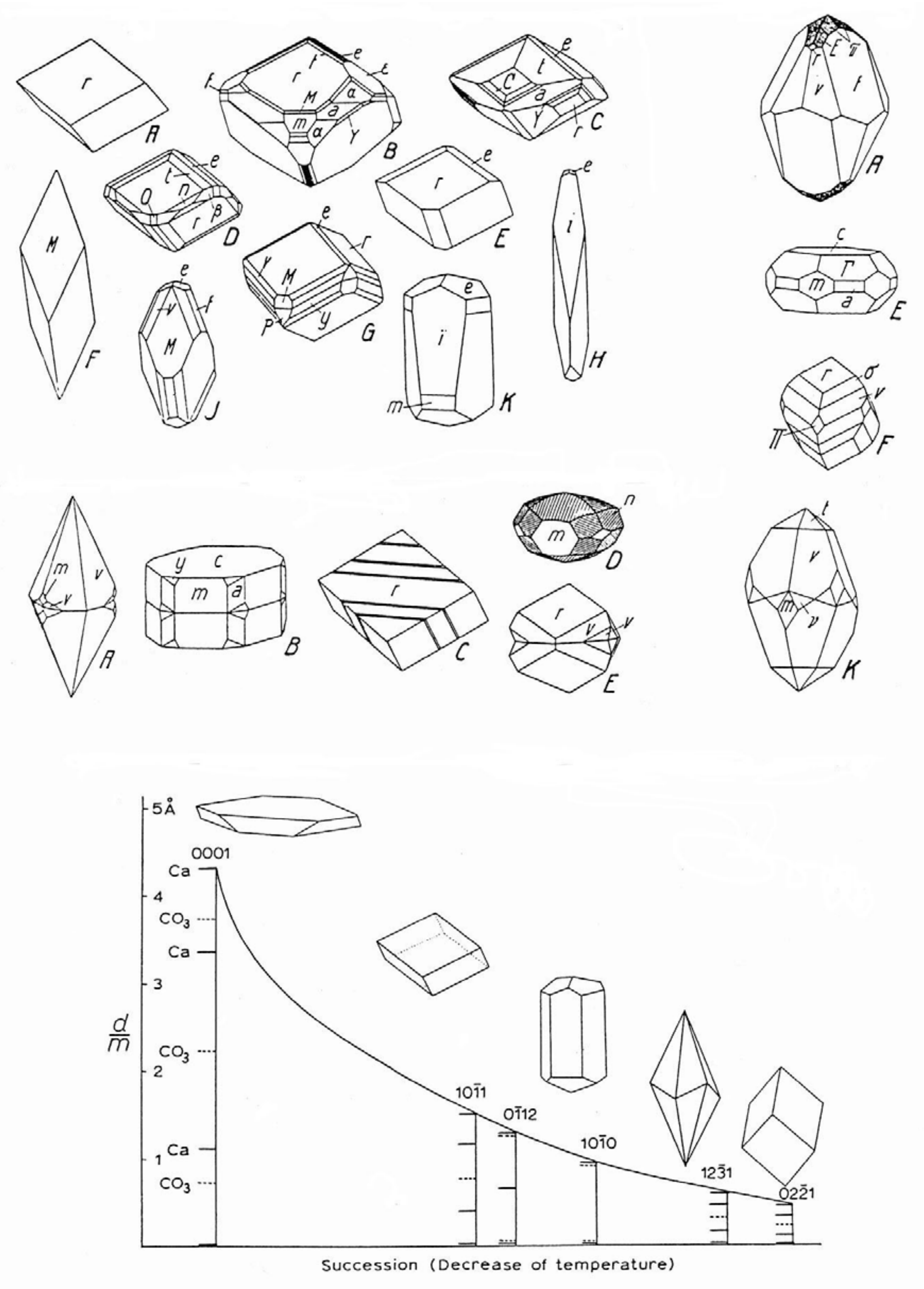

Figure 5-3. Some types of calcite crystals. *Top left*: Examples of what crystallographers call rhombohedral forms. Irby (1878) stated that 50 different forms of this type had been confirmed to occur in calcite. A is the fundamental cleavage rhombohedron. According to Tschermak (1894) and others, this form was common at Helgustaðir but it was probably rarely seen in calcite specimens from other locations before 1900. G is from Iceland. *Right*: Examples of so-called scalenohedral forms, from the U.S. and Europe. Irby (1878) stated that 155 of these are known. Center left: Various types of twin crystals A-E. Twin lamellae as in C can be produced artificially by pressure, see section 21.3. The diagrams are from P. Niggli's Lehrbuch der Mineralogie, 2nd ed. Vol. II, 1926. *Bottom*: Kostov's (1968) suggestion on how the different crystal forms of calcite reflect lowering of the ambient temperature during its deposition. 1011 is the fundamental rhombohedron, 1231 is a scalenohedron. The quantity on the vertical axis relates to a characteristic distance (grating space) between crystalline layers involved in the respective forms.

5.5 Isomorphous minerals, around 1820 and later

The other side of Hauy's (1801) assertion on a one-to-one correspondence between the unique molecular and crystalline shapes of compounds, also turned out to be debatable. Calcite again was a player in this debate, because the shape of its fundamental rhombohedron was very similar to that of the metal carbonates $(Ca,Mg)CO_3$ (dolomite), $MgCO_3$ (magnesite), $FeCO_3$ (siderite), $ZnCO_3$ and $MnCO_3$. At first the crystal angles seemed to be identical, but Wollaston (1812) came to Hauy's rescue by finding with a novel accurate goniometer that the acute angles of Iceland spar, dolomite and magnesite were respectively 74°55', 73°45' and 73°0' (see Partington 1952, p. 114).

Mitscherlich (1818-19, see Rose 1864) then pointed out that in various related or even unrelated compounds, the differences between crystal angles and other properties could be very small; his first examples included certain phosphates and arsenates. A new name had to be found for this phenomenon, and such groups are said to be "isomorphous".

The similarity in shape of the calcite series of metal carbonate crystals gave rise to many kinds of comparative studies, intended to throw light on causes of systematic variations in their physical properties. Thus, Neumann (1831) showed that their specific heats vary inversely with molecular mass, which turned out to be a special case of a general empirical law. Much material on such studies may be found in Arzruni (1893), Tutton (1922, part IV), Linck (1923, chapter IV) and Groth (1926). Related research using X-rays will be described in chapter 36 below. In addition to the above metal carbonates, sodium nitrate (Chile saltpeter, $NaNO_3$) is isomorphous with calcite. Frankenheim (1836) made interesting observations on the deposition of saltpeter crystals from solution on an Iceland spar substrate, which could be shown to govern the crystal growth under certain conditions. Tschermak (1881) carried out a thorough comparison between properties of saltpeter, Iceland spar and the other isomorphous carbonates. The saltpeter will be returned to later, for instance in section 33.3.

6 An epoch of great progress in optics, 1800-15

6.1 Events in optics etc. in Britain 1800-10

Around 1800, important discoveries were made in England, in fields relevant to the history of Iceland spar. In particular, T. Young (1802, 1807) had investigated the behavior of light incident on opaque screens with narrow slits and introduced the concept of wave interference into optics. His results (supported by studies on the colors of thin glass plates, soap films and the like) strongly indicated that light had to be a wave motion in an aether substance. His conclusions did not please a certain H. Brougham, who had previously published two papers on optics (Brougham 1796, 1797). In the latter of these, Brougham had repeated some of the experiments of Martin (1774) on Icelandic crystals. He trusted Newton's ideas of light, and published polemical reviews (Brougham 1803a,b) discounting Young's work. His criticisms along with wars and other factors may have caused a delay in the general acceptance of the wave theory: Thus, no translations of Young‘s 1802 and 1804 papers appeared in French journals, and in Annalen der Physik only in 1811. Brougham's arguments do not appear convincing today; all of his writings on a wide variety of subjects had in fact "but little permanent value" according to Chambers's Biographical Dictionary of 1938. Young (1802, 1807) referred to Huygens' observations on Iceland spar as interesting, but did not himself study double refraction.

W. Herschel published five papers about his experiments on radiation including heat in 1800-01. In one of these (Herschel 1800) he tested how heat rays were transmitted through Iceland crystal and many other bodies. Herschel‘s results suggested to Young (1802) that the heat radiation from the Sun had in many respects the same character as visible light. Young had by then found out that wavelengths of the visible spectrum ranged from 425 nm in the extreme violet to extreme red at 675 nm, so that the heat rays had a longer wavelength than red light. Indications that the total spectrum of solar radiation also reached beyond violet were first noted on the Continent by J.W. Ritter (1803), and soon confirmed by Young.

Wollaston (1802a) constructed a new instrument for making accurate measurements on the refractive indices of solids and liquids for light of different colors. He also made (Wollaston 1802b, see Fig. 6-1) measurements on the refraction of the extraordinary ray in Iceland spar at various angles of incidence. The measurements agreed, at least to the second decimal place, with calculations by Hauy based on Huygens´ (1690) suggestion of elliptical wavefronts. This could be considered, in Wollaston's words, "to be highly favourable to the Huygenian theory". In a review of Wollaston´s paper, Brougham (1803b) praised his experimental work but was obliged to lambast the "untenable and useless hypothesis" of light being a wave.

Wollaston (1809) described another novel instrument, a reflection goniometer for measuring angles between the faces of crystals (top of Fig. 6-1). Here the crystal was placed at the center of a rotatable circular platform, and a horizontal light ray was reflected from its sides in turn. In the first material that Wollaston measured, namely Iceland spar, he confirmed his own previous result that the angle between the symmetry axis and any of the three sides of the crystal is slightly greater than the exact 45°-value assumed by Huygens. The new instrument was more precise than that of Carangeot mentioned in section 5.1 above, and it could also measure small or broken crystals. Its accuracy was improved further by the addition of a telescope with crosshairs (by E. Malus, probably 1809-10) and later by employing a collimator to produce parallel light, see Ann. Phys. 2, 83-89, 1824.

Wollaston also was the first to describe (in an article on the element palladium, in 1804) crystals whose colors depended on the direction from which they were viewed. These were named "dichroic" minerals, the best known being tourmaline. Its properties were described in more detail by Biot (1815d) and Brewster (1820). It turned out that such crystals were doubly refracting but they absorbed one of the two rays much more strongly than the other one. Throughout the 19th century, thin plates of tourmaline were a useful tool for studying double refraction in other materials, and related optical phenomena. However, finding crystals of tourmaline suitable for making such plates could be difficult (see Herschel 1820, p. 97 and Groth 1885, p. 149). It is not always clear from the text of publications early in the century whether Iceland spar, tourmaline plates, or other techniques were being used in various experiments within this field of optics.

6.2 Great times for science coming up in France around 1800

In France, large strides were made in the natural sciences and engineering around and soon after the turn of the century. This progress was in part connected with the country's famous Academy of Sciences (named Institut de France from 1795). In a few decades, a remarkable number of important discoveries were made in for instance mathematical analysis, mechanics, thermodynamics, electromagnetism, the properties of solids and fluids, geodesy, and engineering design (see Timoshenko 1953, Grattan-Guinness 1990, and other historical accounts). Many of the foremost natural scientists of France were either teachers or past students at the engineering school École Polytechnique, established in 1794. Including the development of optics to be described below, it may be said that in the years 1795-1825 physics was becoming solidly established as an independent field of the sciences. The rapidity of this progress is even more remarkable because the careers of scientists were often adversely affected by the political turmoil and wars following the Revolution of 1789; some also suffered poor health.

6.3 News of Wollaston's research reaches France: consequences

Communications between England and France at the time of the Napoleonic wars (1799-1815) must have been rather sporadic. Some historians have claimed that French scientists did not learn about Wollaston's (1802b) research on the double refraction of Iceland spar until 1807 (see Gillispie 1997, p. 211-212, and the entry on Laplace in Dictionary of Scientific Biography 1980-90). However, translations of both of Wollaston´s 1802 papers were actually published in vol. 46 of Annales de Chimie in 1803. In 1805-06 P.S. de Laplace, J.B. Biot and F. Arago were investigating matters connected with the refraction of light, and Buchwald (1989) expects that Laplace wanted to test whether Newton's corpuscular theory of light could explain double refraction. Laplace himself had much faith in that theory, and used it in the interpretation of experiments. He was very influential in the scientific institutions of France, having been for decades one of the nation's

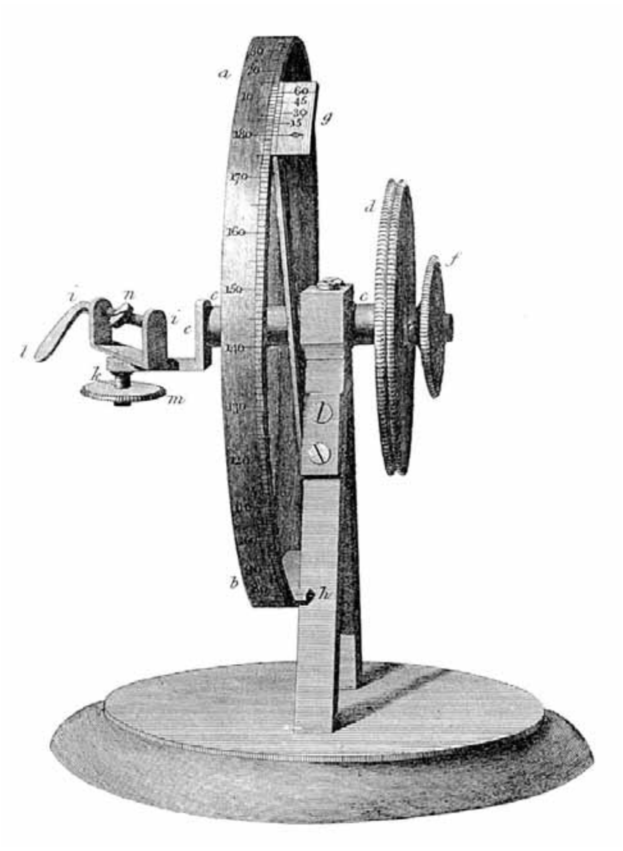

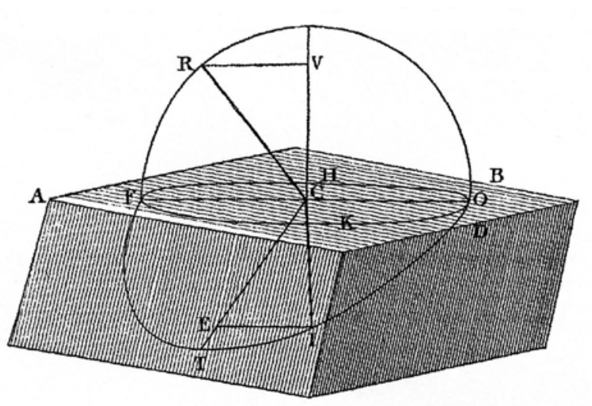

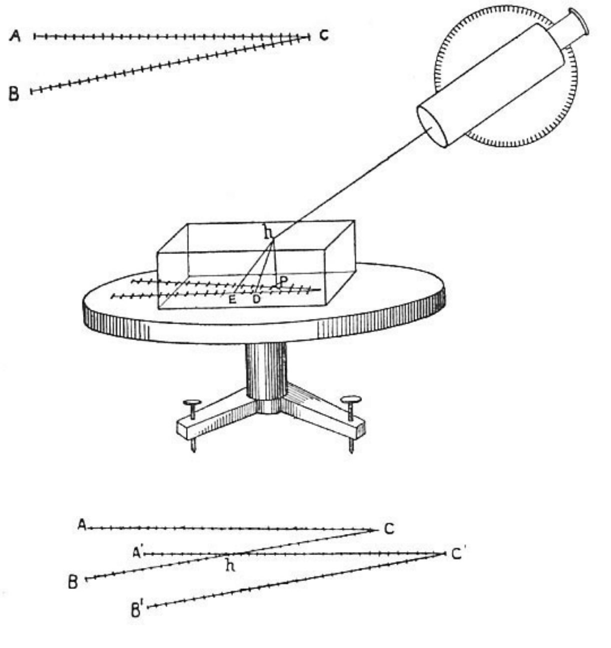

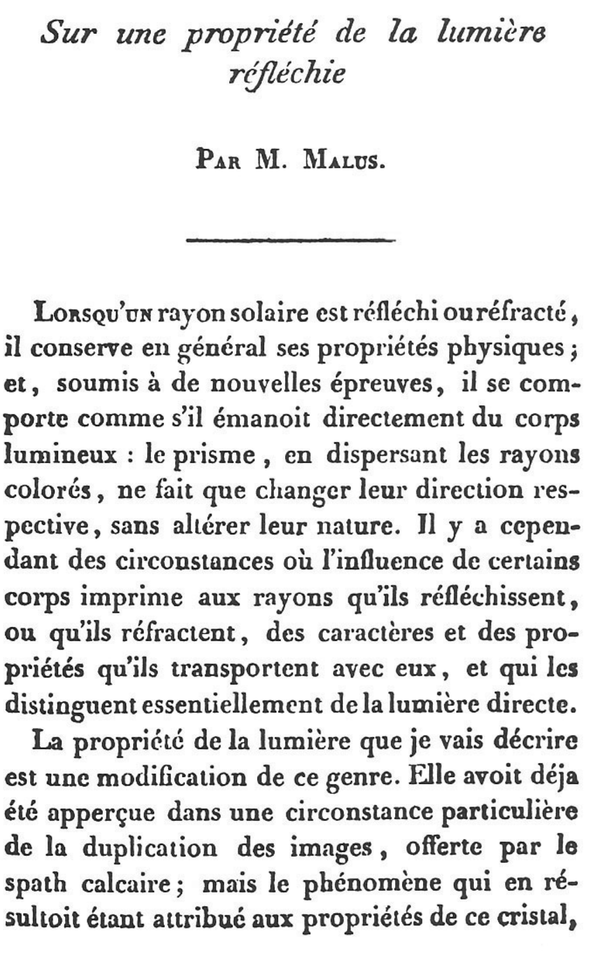

Sur une propriété de la lumière réfléchie

PAR M. MALUS.

LORSQU'UN rayon solaire est réfléchi ou réfracté, il conserve en général ses propriétés physiques; et, soumis à de nouvelles épreuves, il se comporte comme s'il émanoit directement du corps lumineux : le prisme, en dispersant les rayons colorés, ne fait que changer leur direction respective, sans altérer leur nature. Il y a cependant des circonstances où l'influence de certains corps imprime aux rayons qu'ils réfléchissent, ou qu'ils réfractent, des caractères et des propriétés qu'ils transportent avec eux, et qui les distinguent essentiellement de la lumière directe.

La propriété de la lumière que je vais décrire est une modification de ce genre. Elle avoit déja été apperçue dans une circonstance particulière de la duplication des images, offerte par le spath calcaire; mais le phénomène qui en résultoit étant attribué aux propriétés de ce cristal,

Figure 6-1. *Top left*: Wollaston's (1809) reflection goniometer for crystals. *Right*: A diagram from Wollaston (1802b) showing light-wave propagation in Iceland spar. *Bottom left*: Drawing (Wood 1905a) of Malus' 1808 method for measuring precisely the refraction of light in natural and cut pieces of Iceland spar. The lower part shows what was seen in the telescope with the crystal in place. *Right*: The initial paragraphs of the paper by Malus (1809) on his fundamental discovery regarding the polarization of light by reflection. He uses the term "spath calcaire" here, but "spath d'Islande" later in the paper.

most prolific and famous researchers in fields including mathematics, astronomical sciences, and theoretical physics. Probably at his initiative, the Academy announced in December 1807 a prize competition on double refraction, calling both for a theory to explain it and an experimental test of that theory. The competition would close at the end of 1809.

6.4 On the role of Iceland spar around 1800, and on beam-splitting prisms 1777-1820

To 1820 or later, Iceland spar rhombohedrons were probably the main tool for studying double refraction in other materials, because of their large size, transparency and regular shape in addition to the fact that the difference between the two refractive indices of Iceland spar is unusually large. Observers then watched rays passing through the materials, checking whether their intensities changed on rotation (cf. Fig. 3-2).

The two rays coming through the Iceland spar are parallel and not far apart (just over 2 mm for 2 cm thickness, see Fig. 8-3), so that the images of objects overlap. At some point in time it was realized that such observations would be easier if the rays were separated in direction. This could be effected by a wedge-shaped prism, but it is better to cement two such wedges of spar with different optical axes together into a rectangular shape as in Fig. 12-1. In that way, the ordinary ray will pass straight through without dispersion while the extraordinary one is deviated. The earliest available description of such a prism is by A. Rochon (1777, 1783), see also Torelli de Narci 1803 and references, e.g., in Partington (1953).

Rochon's original prisms however, were made of calcite or quartz combined with glass, and served a quite different purpose. He intended to use the constant small angular distance between the two images of a small or distant light source, as a standard in measurements of small angles. Rochon (1811, 1812) also mounted this sort of prisms in telescopes, intended as range-finding devices in for instance naval warfare. They would be simpler to use than glass prisms invented by L. Euler in 1783. More on this in section 12.1.

6.5 A big leap forward in optics: the discovery by E.L. Malus in 1808

A young engineer, E.L. Malus (Fig. 5-2) who had carried out research in optics (Malus 1807a,b) that was of interest to Laplace, took part in the competition mentioned above. He designed a new and very accurate instrument for measuring the refraction in natural or cut pieces of Iceland spar. It employed a circular goniometer invented earlier by J.C. Borda, and two scales engraved in a metal plate, meeting at an angle of arctan(0.1) (Fig. 6-1). Buchwald (1989, p. 31-36) describes Malus' procedures, which were exemplary. First, he bypassed certain problems with internal reflections that had affected Wollaston's results; second, his measurements and the presentation of results including error estimates, were executed with thoroughness and clarity; third, processing of the results and comparisons with Huygens' hypothesis on the extraordinary wave surface, were carried out by computations which was a more complicated but also a more exact method than the previous one of drawing geometrical constructions. Malus confirmed the theoretical predictions of Huygens within 1%, but he did not himself favor the undulation hypothesis (see e.g. Born and Wolf 1999, p. xxvii) and neither did Wollaston (see Gillispie 1997, p. 212). Malus also tested Huygens' theoretical predictions in a less comprehensive way on some other crystallized compounds like lead sulfate, quartz and sulfur. Biot (1818b) verified Malus‘ results on quartz with great accuracy.

A big leap forward in the understanding of the nature of light occurred by a chance event during Malus' researches. According to a biographical account by F. Arago, Malus was one evening inspecting a doubly refracting crystal (most probably Iceland spar) in his rooms at the Rue d'Enfer near the Luxembourg Palace in Paris. He happened to look at the reflection of the setting sun from windows of the palace, and expected to see two equally bright images. They were however different, their intensities varying as he rotated the crystal. He subsequently made the same observation with light reflected from other smooth non-metallic surfaces, and he also noted that the relative intensity of the reflected images varied with the angle of incidence. It is inevitable that many people had looked at reflected light through Iceland spar before Malus, but he was the one to grasp the fundamental significance of his observations. In brief, he had found that *the change in the character of light which occurs on its passage through a doubly refracting crystal (as noted by Huygens), also occurs to some extent when it is reflected and transmitted at interfaces of ordinary materials*.

Malus made further experiments on the refraction of light in Iceland spar and on its reflection, deducing among other things certain "cosine laws" (named after him) relating to both processes. The light that had been modified by these processes was by him said to be "polarized", this property having a direction perpendicular to the direction of propagation. The expression has persisted, although it refers to Newton's tentative suggestion that his hypothetical light particles might have two poles like magnets. Malus informed the Academy of his findings, and his main discoveries on the relation between reflected light and double refraction were deemed important enough to be published with haste (Malus 1808a,b, 1809), well before the competition deadline. Another essay (Kramp 1811) which was submitted to the Academy, received honorable mention. However, Kramp concentrated on descriptive geometrical and crystallographic aspects of double refraction, and his results were of much less general importance than those of Malus.

6.6 Publication of Malus' detailed results, around 1810

Daumas (1987, p. 81) says about the results obtained by Malus, that "a new branch of optics was born", which was no exaggeration. A sensitive property of light had now been added to those (like its intensity, color, or angle of incidence on a surface) that could be measured and changed in order to study the propagation of light and its interactions with matter. Laplace (1808a,b, 1809a,b) published a description of Malus' findings, in fact ahead of Malus (1808a,b, 1809, 1810a,b, and others) himself. Laplace argued that Newton's theory of light was able to explain the behavior of the extraordinary ray in crystals like Iceland spar, by assuming that forces from the material particles of the crystal upon the light corpuscles varied in a certain way depending on their direction of motion. Here he applied the principle of least action, due to P.-L. Maupertuis in 1744.

The prize essay of Malus (1811) is an extended compilation of his experimental and theoretical results on double refraction and polarization. He died in February of 1812. Young (1809, 1810) agreed that the research by Malus on the refraction properties of Iceland spar and on polarization was "the most important and interesting that has been made in France, concerning the properties of light, at least since the time of Huygens". He however criticized Laplace's attempts to keep the unnecessary corpuscular theory alive. Young (1809, p. 344) made the valuable point that the elastic modulus and hence the speed of sound in certain substances such as wood had been demonstrated to vary with direction. The directional dependence of the extraordinary index of refraction in crystals might have a similar cause.

Young and other supporters of the undulation theory could at this time not explain the polarization property of light, because the wave motion in light was expected to be longitudinal (i.e. back and forth in the direction of propagation) as was already well known in the case of sound.

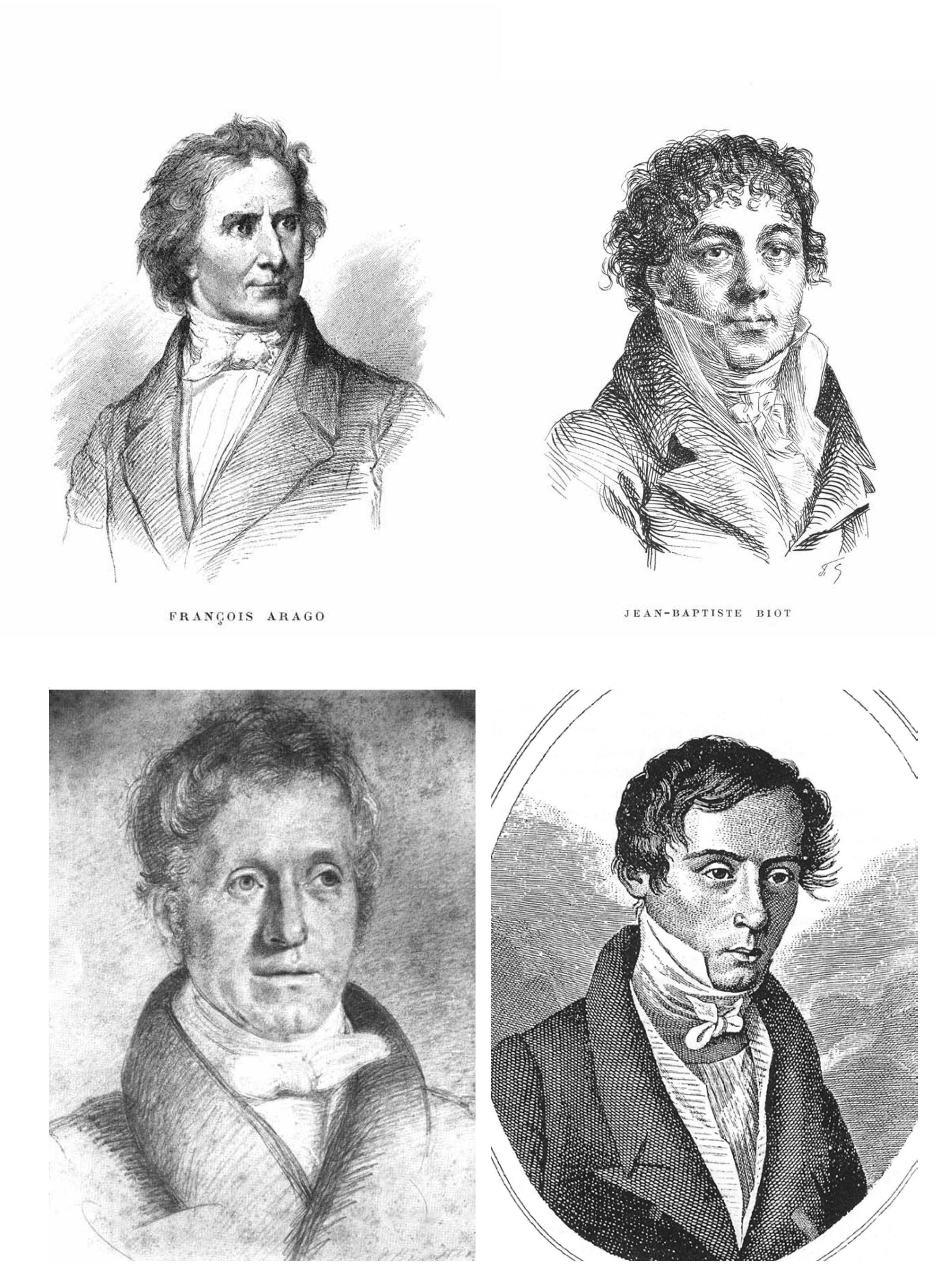

Figure 6-2. Four notable scientists who studied Iceland spar and polarized light. *Top left*: F. Arago (1786-1853). *Right*: J.B. Biot (1774-1862). *Bottom left*: D. Brewster (1781-1868), taken from Morrison-Low and Christie (1984). *Right*: A. Fresnel (1788-1827).

Neither could they explain the phenomena listed in section 4.1 including dispersion of light in materials, luminescence, the chemical effects of light (such as darkening of silver halides, which later became the basis of photography), nor the dark lines in the solar spectrum described by J. Fraunhofer in 1815. It may be mentioned in passing, that Fraunhofer (1823) interpreted the results from his pioneer work on diffraction gratings (which are explained in section 17.1) in terms of Young‘s theory; he also commented on the polarization of light reflected from his gratings.

6.7 On some of the wide-ranging consequences of Malus’ discovery, after 1810

During the next years and decades, scientists studied the new aspect of the nature of light, and made one major discovery after another. Many books have been written about this revolution in optics and the lives of its chief participants. To quote again from Daumas (1987): “The phenomena of polarization were the center of preoccupation among the physicists. Malus had made optics fashionable”. The French were the leaders in the field until at least 1826. In most of this research, Iceland spar crystals were an indispensable tool. This section and the next deal mostly with writings by F. Arago and J.B. Biot (Fig. 6-2); among others studying polarized light soon after 1810 were A.M. Ampère (1815) and J.E. Bérard, see section 10.5. Seebeck (1813) describes various optical observations which he had carried out on Iceland spar crystals since 1804, but these do not add much to work already published by Malus, Arago and Biot.

Arago (1811) by chance observed the light from the clear sky through a thin plate of mica and an Iceland spar rhomb. The sky light is partially polarized, as will be discussed for instance in section 27.1. This produced beautiful colors in the plate, similar to those seen in soap bubbles or oil films on water in ordinary light. When the plate was illuminated with polarized white light the two images seen through the rhomb were in complementary colors, i.e. their overlapping portions were white. Arago made use of the phenomenon by constructing a device to inspect qualitatively whether a particular source of light was polarized. This “polariscope” was a telescope containing a thin piece of mica or clear selenite (gypsum) and a spar rhomb that could be rotated around the line of sight. An observer saw in the telescope two spots of light with different colors dependent on the state of polarization of the light (Verdet-Exner 1887, section 256; Daumas 1987, p. 82). Arago found for instance that the polarization of reflected light varies between the different regions of the Moon. He (see Biot 1816b, p. 99-101) also made a device containing a plate of quartz and a spar rhomb which he called a cyanometer, for studying colors such as the blue tints of the sky. Arago‘s polariscope and cyanometer were sold commercially by various French manufacturers all through the 19th century.

Biot (1812a,b and many others) carried out a very extensive series of experiments on the colors of thin crystalline plates in polarized light. He advanced an explanation of this “polarisation chromatique” by allowing Newton’s luminous particles to rotate or oscillate in a certain fashion inside the materials. Young (1814, 1817) soon pointed out the cause of the colors in terms of the wave hypothesis; his explanation took a while to be accepted by Biot or others (Kipnis 1991). The colors were due to the combination (known as interference) of the two waves of light passing through the crystalline plates. As the difference between the velocities of the ordinary and extraordinary waves was changing progressively with the frequency of the light, they emerged from such a plate in the same phase for some frequencies, out of phase for others, but mostly somewhere in between. This was the first connection between interference and polarization. Many scientists wrote subsequently about aspects of the chromatic polarization, including Mayer (1812, 1815) who however did not produce significant new results. Biot (1816b) constructed an instrument containing an Iceland spar prism and a quartz plate. This device which he called a colorigrade,

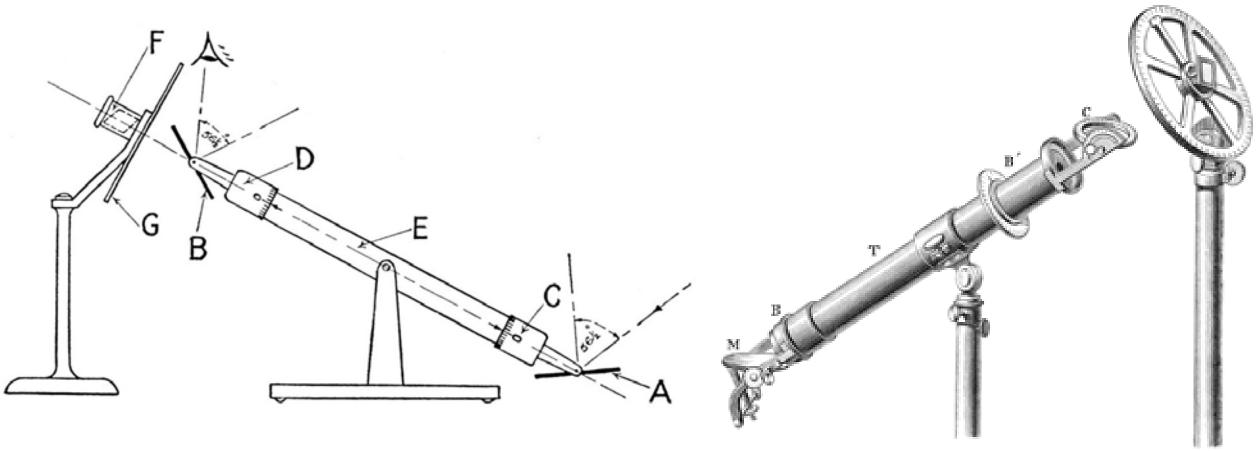

Figure 6-3. Two illustrations of the polariscope of J.B. Biot. The left-hand one is from Cheshire (1923), based on a description in Biot's 1816 textbook on Physics. A is a glass-plate polarizer. One can either look from above at the glass mirror B (eye) or remove this mirror and look from the left through the Iceland spar rhomb F which may be rotated about the axis through the instrument. G is a graduated circle seen edge-on. The right-hand illustration (Mascart 1891) is based on Biot's papers from 1812-14. M is the glass-plate polarizer. Crystal plates could be placed on the platform C for inspection; the observer looks through the Iceland spar rhomb attached to the graduated circle on the right.

could generate a range of colors out of white light. The phenomenon attained practical importance when applied in polarizing microscopes for mineralogical and petrographic studies on thin sections after 1860. See for instance Billet (1858-59, Chapter X), Bertin (1879) and sections 18.2 and 22.4 below.

Biot (e.g., 1818a) frequently mentions Iceland spar in the many papers he wrote on the various interactions between light and matter in a period of over 40 years. One paper (Biot 1815b) treats in particular the variation in the refractive indices of Iceland spar with wavelength of the light, i.e. its dispersion. Biot (1814, 1818b) also found that in some minerals including quartz the index of the ordinary ray (n_o) was less than that of the extraordinary ray (n_e). This was opposite to the situation in Iceland spar and many other crystals, and he realized that in the quartz group the ellipsoid of Huygens would be elongated (prolate), rather than flattened (oblate) as in Fig. 6-1. According to the corpuscular theory however, one might assume that the light particles were attracted to the symmetry axis of the crystal (its optical axis, called axe de réfraction by Malus) in the quartz group and repelled from it in the calcite group. Since then, the former minerals have often been called positive uniaxial, and the others are called negative uniaxial ones.

In the experiments of Biot (e.g., 1812b, 1818b and later) a "polarizer" first produced pure polarized light from ordinary light. The state of polarization of the light was then observed in an "analyzer" after having for instance passed through a material specimen. Both could be rotated about the direction of the ray path, and adjusted so that the analyzer blocked all the light passed by the polarizer. As a polarizer, Biot used a reflecting glass plate tilted at an optimum angle (see sections 7.3 and 8.1) determined initially by the experiments of Malus. His analyzer was another glass plate, a rhombohedron of Iceland spar, or a Rochon prism also of Iceland spar (see Mascart 1891 and Cheshire 1923, Fig. 6-3, also Bates et al. 1942, and Appelquist 1987). This type of polariscope later developed into the most common form of instruments called polarimeters, see section 13.2 and others below. I have not found much information on the contributions of others to stages in that development before 1840, except for one German description of such an instrument (Schulze-Montanus 1817).

6.8 Optical activity, 1811-15

Another phenomenon first noticed by Arago (1811) and studied in detail by Biot (1812b, 1818c and many other papers) was a peculiar action of quartz plates upon polarized light, in addition to the double refraction exhibited by that mineral. If a plate had been cut in a direction at right angles to the optical axis of a quartz crystal, the characteristic direction of polarization in a light ray *rotated* progressively on its way straight through the plate. Some crystals of quartz rotated light to the right, others to the left by an equal amount. This was a puzzle for decades, see section 16.2 on L. Pasteur. The rotation amounts to 21.7° per mm of thickness for yellow sodium light, but it increases rapidly from red to violet. This property was called by Biot "polarisation circulaire" or "pouvoir rotatoire"; in English the terms rotatory power or optical activity are used.

Other instances of optically active crystals were not discovered until around 1855, see section 18.2. According to Biot's ideas, the corpuscles of light were supposed to rotate about the optical axis of quartz on their way. Soon however, yet another unexpected phenomenon demonstrated that the cause of the rotation of light in a material need not be connected to a crystalline structure. Biot (1815a, 1818c and later) namely announced that optical activity was also present in organic liquids, such as essential oils from plants and aqueous sugar solutions. This important story will be resumed in section 12.4.

The rapid accumulation of interesting results on polarized light after 1808 is reflected in J.B. Biot‘s textbooks of physics. Thus, already in his Traité de Physique (Biot 1816c), over one-third of the coverage on light is devoted to polarization and double refraction.

7 Continuing progress, 1816-20

7.1 The wave theory gains ground: A. Fresnel, transverse waves etc. from 1816

In the spring of 1817, the French Academy of Sciences again announced a prize competition in optics. This time the object was to explain the bending of light around obstacles, called diffraction. The members of the Academy involved were hoping that this would help in getting the corpuscular emission theory firmly established. The competition was the occasion for the first scientific publications of another young engineer, A. Fresnel (Fig. 6-2). He had indeed been taught in the École Polytechnique that light was a stream of particles, but his own observations as well as those of Young, Malus and Arago convinced him of the superiority of the wave hypothesis. Fresnel (1816, 1819, 1822b) used it to explain thoroughly the diffraction phenomenon, and he won the competition in 1819.

Fresnel went on to make other major contributions in the field of optics. Arago had also come to believe in the wave theory of light, and together they investigated in 1815-19 the interference of polarized light. Among other things they demonstrated that two perpendicularly polarized rays produced (by a rhomb of calcite or by stacks of glass plates) from a ray of ordinary light would not give rise to an interference pattern when combined (Arago and Fresnel 1819). T. Young heard of their results, and pointed out in letters to Arago in 1817-18 that the movement in the light wave had to have some characteristic that was transverse to its direction of propagation. According to Lloyd (1857, p. 136), Verdet (1869, p. 444-445) and Rosmorduc (1977), Young envisaged the transverse component of the wave to be very small, even only mathematical rather than physical. Fresnel‘s manuscripts indicate that he had already in 1816 independently admitted the possibility of transverse waves. However, as Arago seems to have been hesitant to accept the idea, Fresnel did not publish definite statements on the transverse character of light until 1821 when encouraged to do so by A.M. Ampère. This concept was very important in the continuing development of optical theories, and soon also in research on heat radiation (see Silliman 1975) and elasticity (section 10.1). The Arago-Fresnel experiment was quoted in advanced textbooks on physical optics for over a century (Wild 1856, Verdet 1869, Wood 1905, Bruhat 1942, etc.). It should be noted that R. Hooke had suggested that light waves were transverse, in a 1672 publication.

7.2 Polarization of light - explanations

The admission of transverse vibrations in light calls for explanations and definitions. Let the z-axis of a rectangular system of coordinates be aligned with the direction of propagation of a

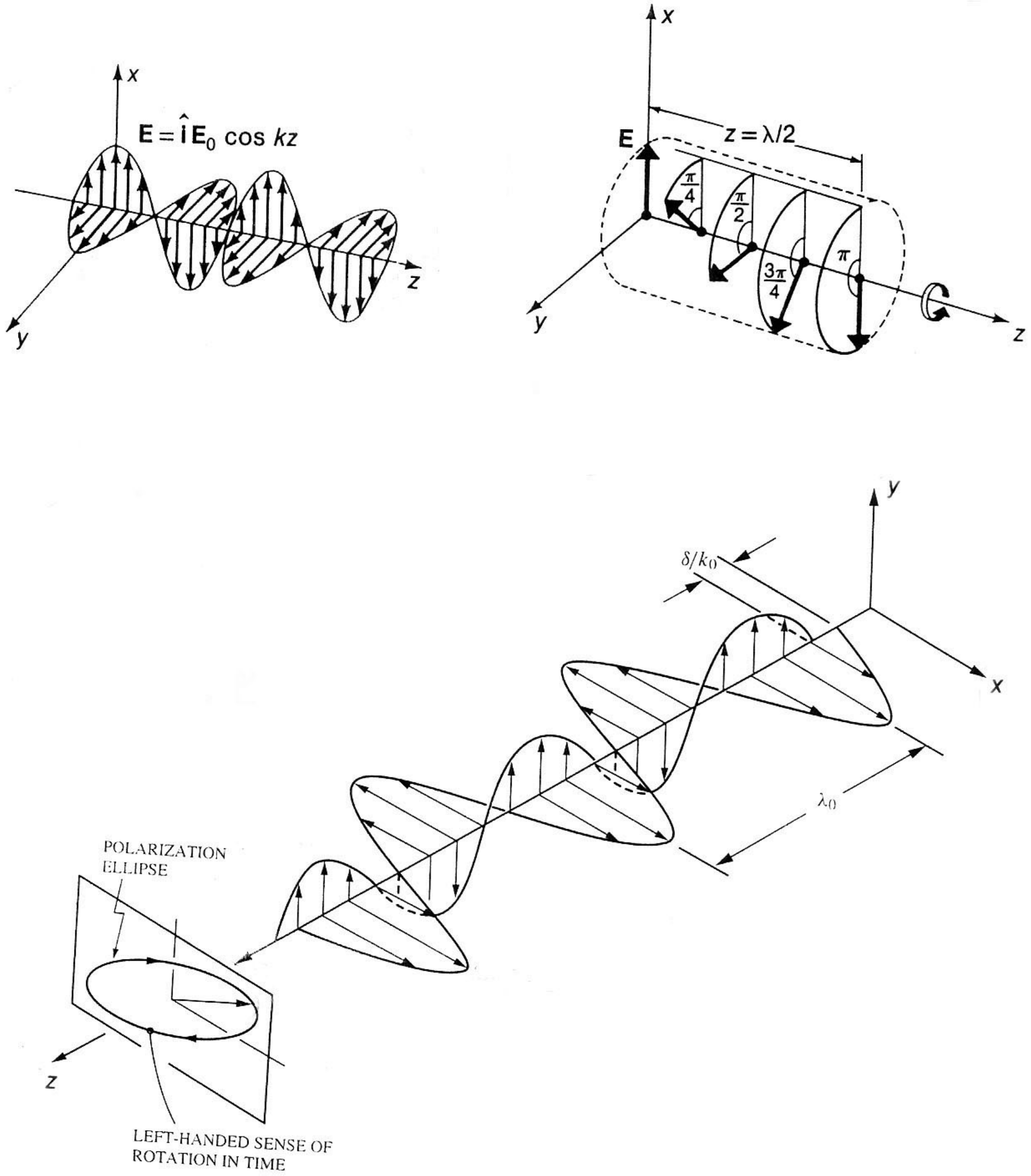

Figure 7-1. Three different states of polarization of light, partly from the viewpoint of electromagnetic theory. *Top left*: Two similar waves (i.e. light rays) travelling along the z-axis. The electric field of one of these is in the x-direction, that of the other is in the y-direction. Their combination is a single linearly polarized wave with its field inclined 45° from both the x- and y- directions. *Right*: By passage through a mica sheet of appropriate thickness, one wave has been delayed ¼ of an oscillation relative to the other. They now combine to form a circularly polarized wave. *Bottom*: A general case, where the waves are of unequal amplitudes and have an arbitrary phase difference less than ¼ of oscillation. They now form an elliptically polarized wave. Simplified from J.B. Marion and W.F. Hornyak: Physics, 1982.

monochromatic light ray. Then the actual vibration of the "light vector" (whatever its nature) may be considered to consist of two components: one is a sinusoidal wave in a quantity pointing the x-direction and the other a sinusoidal wave of a quantity pointing in the y-direction. See Fig. 7-1.

If the amplitudes of these component waves are X and Y respectively and they are completely in step, then their resultant will always lie in a plane that makes an angle arctan(Y/X) with the xz-plane. This is said to be a case of "linear" or "plane" polarization, and so is the case when the x- and y-waves are half a vibration out of step. If the components are of equal amplitude and one is a quarter of a vibration ahead of the other, the end of the wave vector will appear (from an observer looking along the z-axis) to go around in a circle. In fact it performs a helical motion, because the wave is advancing. This is called circular polarization, right- or left-handed depending on conditions and conventions. If the difference in time between the waves is some other arbitrary fraction of a whole cycle, we speak like Fresnel of elliptical polarization because the projection of the wave vector on the xy-plane will describe an ellipse. Instead of referring to a time difference, one generally refers to the difference in phase between the two components: 0° or 180° for linear polarization, 90° or 270° for circular polarization, and so on. Ordinary light travelling in the z-direction, for instance from the Sun or from a lamp, is composed of a multitude of such waves with random directions of vibrations and random phase differences from each other (in addition to being of course of many frequencies). It is therefore said to be unpolarized.

7.3 D. Brewster: Brewster's angle, biaxial crystals and more, 1810-20

We now move to Scotland where D. Brewster (Fig. 6-2) worked independently on a wide range of experiments in optics, crystallography, mineralogy and related fields. The list of his publications includes over 1200 titles in 1800-69 (Morrison-Low and Christie 1984), from small newspaper items to books (e.g. Brewster 1831). He was also active in societies and as a journal editor. Brewster seems never to have taken a definite stand in the particle vs. wave debate on light, but his research greatly advanced optical science.

One of his results (Brewster 1815a) from measurements made around 1811 on many materials, was this: when light with "parallel polarization" falls from air on to the smooth surface of a solid or a liquid, none of it is reflected if the angle of incidence (ϕ in Fig. 7-2, top left) is equal to arctan(n) where n is the index of refraction of the material. This "Brewster's angle" is for instance 56.3° for glass with an index of 1.5. More complex laws apply to doubly refracting crystals, as will be mentioned later.

W.H. Wollaston told Brewster in 1814 that if an Iceland spar plate, cut at right angles to the optical axis, was illuminated with convergent light, concentric colored rings with a dark cross could be seen. Brewster, who had himself noted this in a few precious stones (Brewster 1813a, see also Brewster 1860), then carried out similar observations on many minerals (Fig. 7-2 and 7-3). He was thus able to confirm (Brewster 1818b, 1819-20) and extend a result that J.J. Bernhardi had previously obtained from more limited evidence, namely that certain symmetry aspects of the geometry of crystals also appear in their optical properties. Minerals forming cubical-shaped crystals do not exhibit double refraction, while in crystals from three of the other crystal systems (section 9.1), the symmetry axis is also an optical axis along which the speeds of the ordinary and extraordinary waves are equal. In crystals belonging to the three least symmetric systems there arise two extraordinary waves which travel with different speeds in all but two particular directions. The phenomenon was also studied by Biot (1818a,b) and Herschel (1820, Fig. 7-2); see section 8.2 on its theoretical derivation by A. Fresnel. This distinction between optically uniaxial and biaxial crystals later became, like the thin-plate colors of Arago and Biot, an important tool in

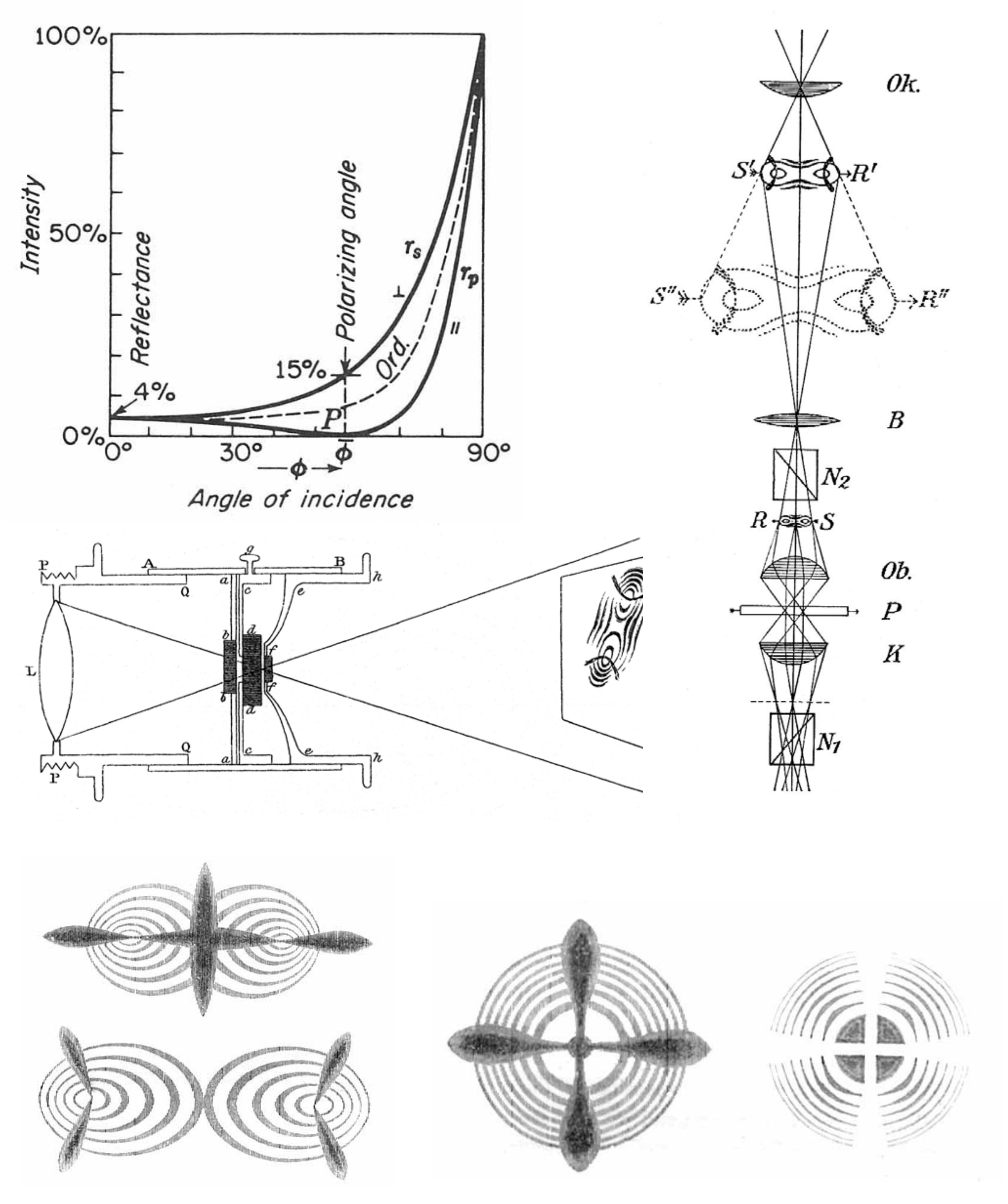

Figure 7-2. On two of the many discoveries of D. Brewster. *Top left*: Graph of the relative intensity of light reflected from a glass surface, for different angles of incidence. The upper and lower curves apply to light polarized respectively at right angles to the plane of incidence and parallel to it. The center curve is for unpolarized light. At the Brewster angle arctan(n) which is 56-60° for common types of glass, none of the parallel-polarized light is reflected. From Jenkins and White (1957). *Right*: Microscope for viewing a thin plate P of a crystal in convergent polarized light. The Nicol prisms N correspond to P and A in the next Figure. From Weinschenk (1925). *Center left*: Herschel‘s (1820) projection apparatus, with tourmaline. *Bottom*: Patterns seen in the above equipment; those on the right appear (under different conditions) when the crystal has one optical axis, those on the left appear when it has two such axes. From Lloyd (1857).

crystallographic and mineralogical research. Herschel describes a device with a single converging lens, a tourmaline polarizer and analyzer for both viewing these interference figures and projecting them on a screen. The oldest commercial offers of this type of polariscope which I have found are from Albert (1828) and Pritchard (1836).

One more discovery by Brewster (1815c, 1816b) concerned the fact that objects from glass, transparent wax, jelly or fluorspar which normally are not doubly refracting, acquire that property when they are subjected to non-hydrostatic pressure. If the state of stress varies through such an object, it exhibits patterns of colored fringes in transmitted polarized light. This phenomenon was for a long while called “accidental” or “artificial” double refraction, later “photo-elasticity”. Both Brewster (1814, 1816a), T.J. Seebeck (1814) and Biot (1815c) studied also, with the aid of glass mirrors or Iceland spar, double refraction in rapidly cooled glass which has large internal stresses. These papers attracted considerable attention, see Biot (1816a), and Brewster and Seebeck were awarded a prize by the French Academy for their discoveries. Biot (1819) himself used the same technique for a study of longitudinal vibrations in a six foot long glass rod, with the assistance of F. Savart. See chapter 11 and section 15.3 on further work in this field.

It may be mentioned here that J.W. Goethe was very interested in the science of light and colors, and he had published a large work on the subject in 1810, “Zur Farbenlehre” which was influential for a long time (Dove 1853). Malus and others criticized Goethe’s theories, as he for instance considered white light not to be composed of other colors. This led to correspondence between Seebeck and Goethe about Seebeck’s research and previous discoveries by Malus, Biot and Arago regarding polarized light. In late 1812, Seebeck sent a prism of Iceland spar to Goethe. In a follow-up volume by Goethe, “Ergänzungen zur Farbenlehre” published in 1820, there are sections on Iceland spar, colors of thin crystalline plates, and related matters.

Brewster (1816c) demonstrated that the crystalline lens in the eyes of animals is doubly refracting, and he investigated various topics regarding the optics of eyes and vision during the following decades. Those investigations, according to Morrison-Low and Christie (1984, p. 101-103) “may be truly said to lay the foundations for modern biophysics”.

Brewster also made some studies on Iceland spar (e.g. Brewster 1815b) and used natural samples or prisms from it in much of his research. He usually calls it “calcareous spar” but also “Iceland spar” (at least in Brewster 1813b, 1814, 1815b). In one of his papers (Brewster 1818a) he had recently acquired “some very perfect specimens of calcareous spar”. He rarely states where these came from (see Appendix 4); however, once in an 1819 article he mentions the Faeroes, and Ireland in another instance.

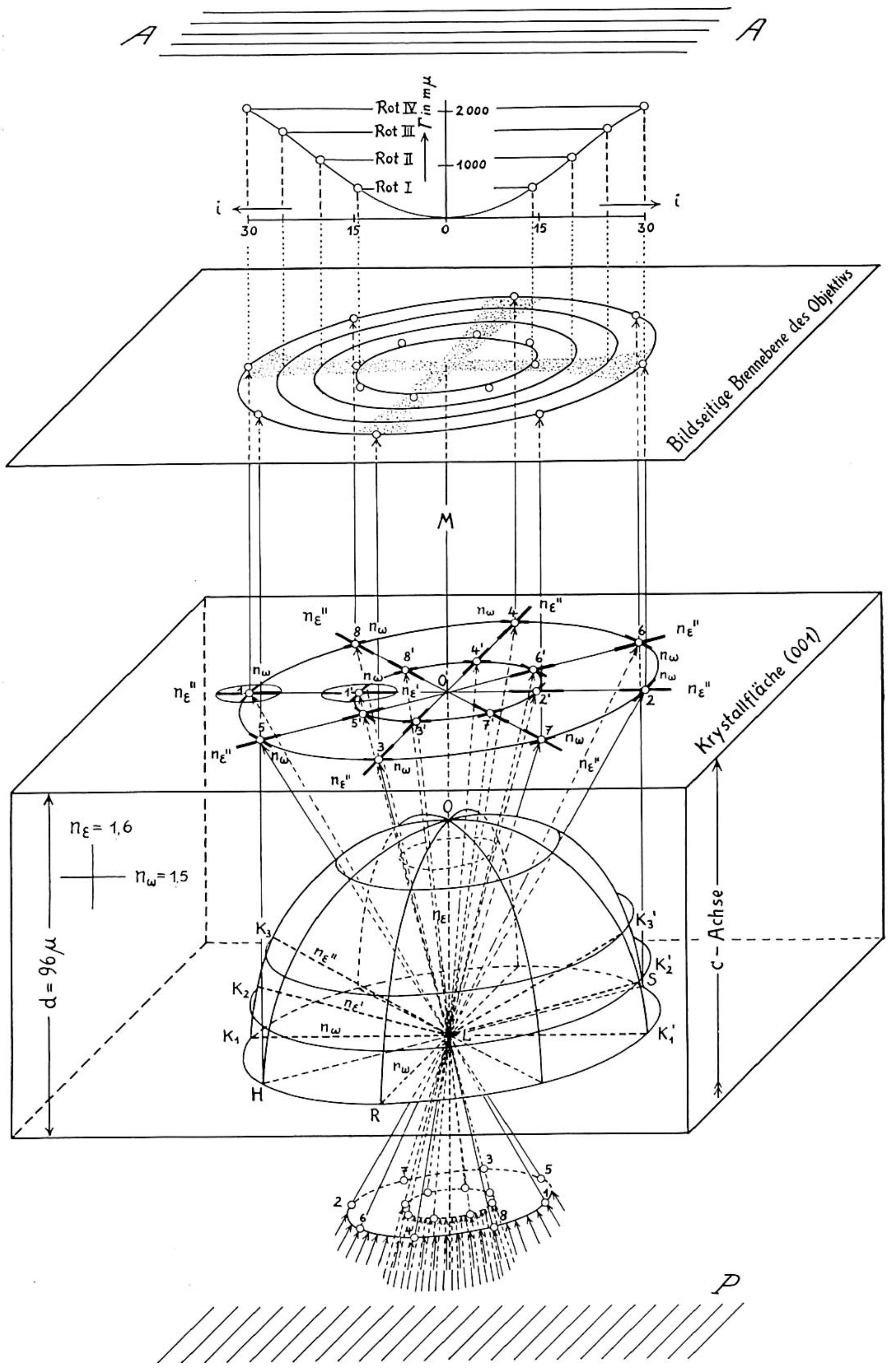

Figure 7-3. A diagram explaining how the circles and the shadow-cross in the previous Figure originate. A conical beam of light enters from below through the polarizer P and a plate of uniaxial crystal. The circles are formed by interference of the ordinary and extraordinary rays. The cross appears where the net light vibration is in a direction not transmitted by the analyzer A. From Houben-Weyl (1955).

8 Further major contributions by Fresnel, 1817-1827

In the last decade of his short life, A. Fresnel was very productive in research and writing. Lloyd (1857, p. 136) says that Fresnel in his research on light as a transverse wave "…reared… the noblest fabric which has ever adorned the domain of physical science, - Newton's system of the universe alone excepted." (In a similar statement referred to by D. Brewster in the Report of the British Association of 1832, the names of several other scientists are also mentioned). At the beginning of a 150-p. translation of Fresnel's (1822b) review chapter on light which appeared in instalments in the Annalen der Physik in 1825-28, the editor anticipates that his research will have great impact in various fields of physics. He also considers that optics has hitherto been given far too little attention in Germany. As the publication history of Fresnel's papers, and their interrelationships, are unusually complicated, I shall merely present some of his most important contributions connected to polarized light. More detailed accounts may be found e.g. in Buchwald (1989) or Grattan-Guinness (1990).

F. Arago supported Fresnel's research in various ways and publicized it, for instance in a major article in the Encyclopaedia Britannica in 1824 (Arago 1858a). Some of Arago's own contributions to the study of polarized light and photometry are mentioned elsewhere in this account; however, many of his writings were only published in the posthumous collection of his works (Arago 1858b,c) except for short abstracts (e.g. Arago 1850).

8.1 Theoretical and experimental work by Fresnel on light in ordinary materials

Fresnel (e.g. 1817) embarked on a study of the question how a light wave is transmitted through ordinary (uncrystallized) materials like glass. By his incredible insight, he was able to predict various aspects of the behavior of the light in such environments. For instance he obtained precise equations for the relative amount of light that is reflected when incident on a surface of a solid or a liquid, as a function of its refractive index and the angle of incidence. This amount is also to a considerable extent dependent on whether the light is polarized in the plane of incidence or at right angles to it (Fresnel 1821, p. 312-315). Brewster's experimental result (section 7.3) that no light in the former state of polarization is reflected at the angle arctan(n), corresponds to a simple special case of Fresnel's equations. Within a range of angles of incidence in the vicinity of Brewster's angle, very little of that component is reflected (Fig. 7-2). This was the circumstance that had led to Malus' discovery of polarization by reflection in 1808.

Fresnel's manuscript with a detailed derivation of his reflection and refraction formulas was lost for a long time, and was published only in the posthumous edition of his complete works (Fresnel 1866-70). However, the formulas appear in extract (Fresnel 1823). No accurate equipment for

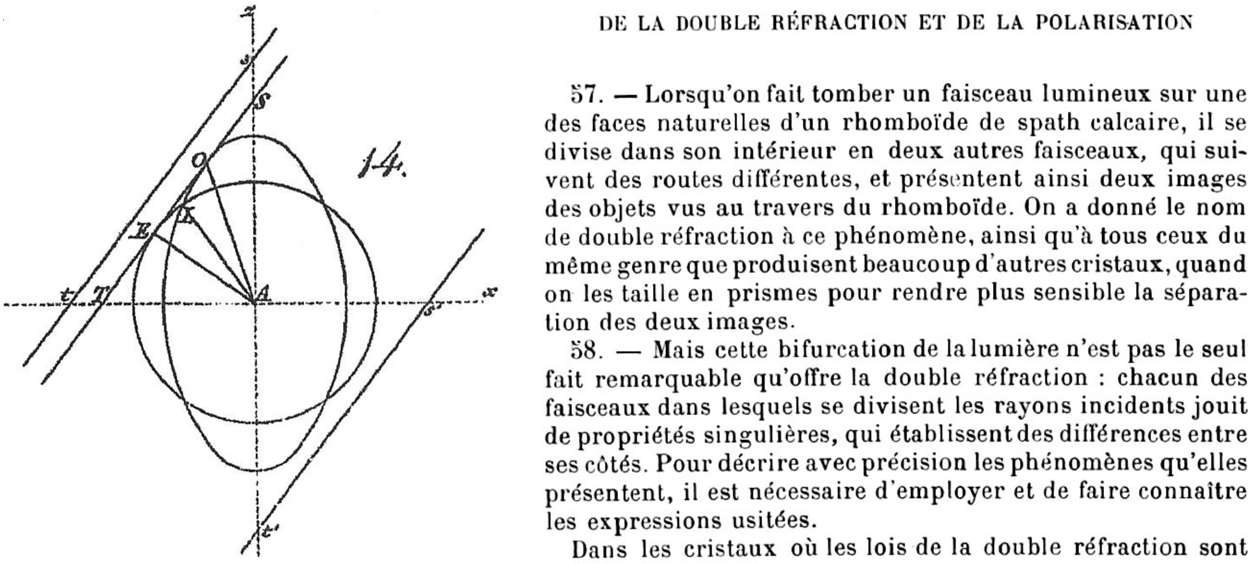

DE LA DOUBLE RÉFRACTION ET DE LA POLARISATION

57. — Lorsqu'on fait tomber un faisceau lumineux sur une des faces naturelles d'un rhomboïde de spath calcaire, il se divise dans son intérieur en deux autres faisceaux, qui suivent des routes différentes, et présentent ainsi deux images des objets vus au travers du rhomboïde. On a donné le nom de double réfraction à ce phénomène, ainsi qu'à tous ceux du même genre que produisent beaucoup d'autres cristaux, quand on les taille en prismes pour rendre plus sensible la séparation des deux images.

58. — Mais cette bifurcation de la lumière n'est pas le seul fait remarquable qu'offre la double réfraction : chacun des faisceaux dans lesquels se divisent les rayons incidents jouit de propriétés singulières, qui établissent des différences entre ses côtés. Pour décrire avec précision les phénomènes qu'elles présentent, il est nécessaire d'employer et de faire connaître les expressions usitées.

Dans les cristaux où les lois de la double réfraction sont

Figure 8-1. *Left:* One of the best-known illustrations from Fresnel (1827), dealing with the propagation of a light wave in a biaxial crystal. The intersection of the two elliptical surfaces causes a peculiar phenomenon known as conical refraction. *Right*: In this text from a re-publication of Fresnel's (1822a) review chapter on light, it is seen that (like many others) he used calcite as the type example of uniaxial crystals.

measuring light intensity was available in Fresnel's lifetime, so that the reflection formulas were not tested directly until half a century later (by Glan 1874, according to Winkelmann 1906, p. 1249). However, his general results were confirmed broadly in many other ways (e.g. by Desains 1851, using Iceland spar), and the formulas are still an essential item in University textbooks on optics. Fresnel himself carried out ingenious experiments related to his theoretical derivations, using among other things "un rhomboide de spath d'Islande". A rhomboidal glass prism named after him (Fresnel 1822a) is illustrated in Fig. 8-2. It converts linearly polarized (or: plane-polarized) light into circularly polarized light or the other way around. At each of two internal reflections, the phase of one polarization component is delayed 45° relative to the other. These experiments furnished convincing support for the wave theory of light (cf. Biot 1818c, p. 133-136).

Fresnel must have realized that the aether concept was in certain respects inadequate, and his computations were also very complicated. An essay on these matters only appeared in the collection of his complete works (Fresnel 1866-70). The speed of a sound wave in an elastic material is generally equal to the square root of a modulus of elasticity divided by a density. In Fresnel's theory the elastic modulus of the aether in different materials was the same, while its density varied between them. This led to the conclusion that the transverse motion of the aether was at right angles to what Malus and others had called the "plane of polarization" of a linearly polarized light ray.

8.2 Fresnel's hypothesis on double refraction in crystallized materials

Fresnel (1821) studied the reasons for the colors and figures observed in thin plates of mica, gypsum and other minerals in polarized light, explaining them on the basis of Huygens' theory. Thanks to Arago (e.g. 1821), efforts by Biot (who still adhered to Newton's ideas) to stop the Academy from publishing Fresnel's paper were unsuccessful. Iceland spar was much involved in these studies, as recalled by Billet (1862): "…the celebrated experiment of crossed Iceland spar prisms by Fresnel, designed to counter objections raised against his theory of colors in crystalline plates…".

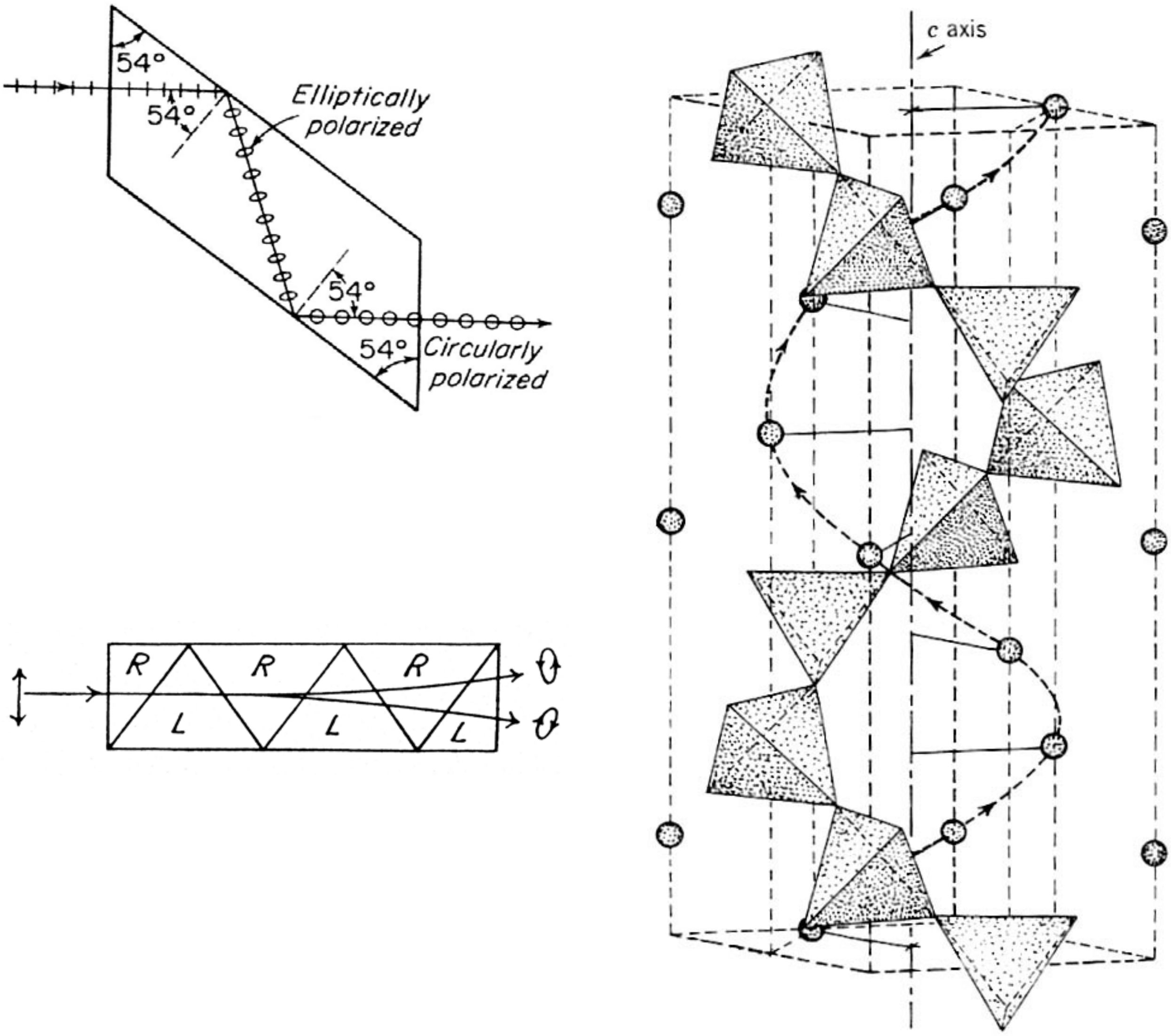

Figure 8-2. *Top left:* Fresnel's glass prism, which converts linearly polarized light into circularly polarized light by two total internal reflections. From Jenkins and White (1957). *Bottom left:* A modified version of Fresnel's composite prism made from right-handed and left-handed quartz. A linearly polarized light beam entering from the left is split into two circularly polarized beams, one rotating to the left and the other to the right. This agreed with Fresnel´s theoretical prediction. From Wood (1905a). *Right:* The spiral structure of quartz, suggested by Fresnel in order to explain its optical activity and confirmed by X-ray studies more than a century later. From Wahlstrom (1969).

Fresnel (e.g., 1821-22, 1822b, 1827) also investigated the wave motion of the aether in crystals, beginning with those having a symmetry axis (such as Iceland spar, Fig. 8-3). He also considered the more difficult case of crystals which Brewster and others had recently shown to have two axes along which there is no double refraction. As well as considering waves emanating from a single point, Fresnel studied the propagation of plane waves passing in all directions through a point. He defined new expressions that were also used by subsequent researchers, among them "ellipsoid of elasticity" and "Fresnel's wave surface". From his assumptions he deduced that in a uniaxial crystal the luminous oscillations would indeed be propagated as two waves, agreeing precisely with Huygens' (1690) construction for the ordinary and extraordinary rays. In the latter, the aether oscillations would lie in the plane determined by the direction of propagation and the optical axis. In the ordinary wave, the oscillations were at right angles to these and also at right angles to its own direction of propagation (Verdet 1869; Wood 1977, p. 81-82). It was found much later that

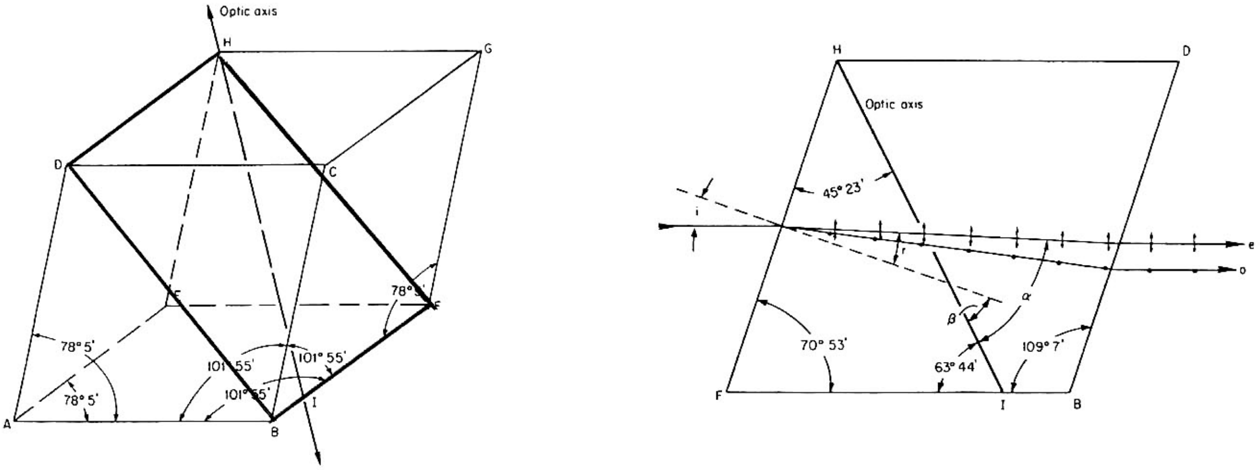

Figure 8-3. On the left is an Iceland spar rhomb, with one of its principal planes outlined in bold. On the right a light ray falls on the back side of the rhomb, the angle of incidence being i in that principal plane. In the extraordinary (e-) ray, the direction of polarization lies in the principal plane as shown by up-down arrows, while in the ordinary (o-) ray it is at right angles to that plane as shown by dots. The angles α and β can be derived from i and properties of the crystal. From Bennett and Bennett (1978).

the energy of the incident wave motion is divided equally between the two rays, but discussion of the theoretical or experimental evidence for this is not given much prominence in the literature.

Here we can introduce the concept of a "principal section" in a uniaxial crystal (Fig. 8-3); Huygens (1690) had already appreciated its importance. In calcite there are three principal sections, each of which is a plane containing the optical axis and a normal to a cleavage plane. Such a plane cuts the crystal rhombohedron in a parallelogram having angles of 71°/109°. Fig. 8-3 shows a light ray falling on a surface of Iceland spar: a natural specimen is on the left. The area HBDF emphasized in bold, is one of the principal sections and it is perpendicular to the surfaces EFGH and ABCD. Imagine light coming through the side EFGH at an angle of incidence i. The right-hand diagram shows how the ordinary ray o (polarized at right angles to the section) is refracted according to Snell's law. The extraordinary ray e is refracted in a different direction, away from the optical axis. Huygens' hypothesis leads to the speed v of the e-wave normal being found from the equation $v^2/c^2 = \sin^2\phi/n_e^2 + \cos^2\phi/n_o^2$. Here, ϕ is the angle between the optical axis and the wave normal, not shown in Fig. 8-3.

In biaxial crystals, light is propagated as two extraordinary rays, and there is no ordinary ray obeying Snell's law. In these crystals the wave surface of Huygens is an ellipsoid with three unequal axes (giving three characteristic refractive indices). According to the laws of geometry, there are always two planes through the center that cut the ellipsoid in a circle (Fig. 8-1). The two optical axes are perpendicular to these circles. See a discussion in section 10.4 of an important effect connected to this geometrical property. The angle between the axes differs from one mineral to another, and therefore became a valuable diagnostic tool. Various instruments for its measurement will be mentioned below.

Fresnel (1822a) also investigated the optical activity of quartz. He considered this property to be caused by the slightly unequal speeds of waves (their refractive indices differing by less than 10^{-6}) with left-hand or right-hand polarization in the material. He ingeniously tested his idea by sending a linearly polarized light ray through a composite quartz prism where it split into circularly polarized rays (Fig. 8-2, divergence much exaggerated). Fresnel also suggested that the reason for optical activity in crystalline quartz was related to a spiral arrangement of its constituent particles (molécules integrantes). This was eventually confirmed (see Wahlstrom 1969, and Fig. 8-2, right).

9 On crystallography and the role of calcite in its development in the first half of the 19th century

9.1 On crystallography and light, 1815-30

Around 1815 scientists had realized (section 5.3) that each crystalline substance belonged to one of six or seven so-called systems, based on their geometry. In the order of decreasing symmetry and using their modern names, they are the following:

- The *cubic* or "regular" system, based on a three-dimensional network of cubical cells. Examples include diamond, halides like common salt (NaCl), and various metal sulfides. As already stated, they do not exhibit double refraction, but certain exceptions will be mentioned in section 18.2.
- Crystals with one optical axis belong to the *tetragonal* and *hexagonal* systems. As the names imply, they have four- and six-fold symmetry around that axis. A seventh system with trigonal symmetry was often counted as a separate one, but especially after the advent of X-ray spectroscopy (1913) it has been considered part of the hexagonal system. Calcite belongs to a rhombohedral class within the trigonal system. Quartz is also trigonal.
- Biaxial crystals are divided into three systems. The one with most symmetry is the *orthorhombic* system. Examples of orthorhombic minerals include olivine and aragonite ($CaCO_3$). The others are the *monoclinic* and the *triclinic* systems; among minerals belonging to these systems are augite and the plagioclase feldspars which are common in Icelandic basalts. In the feldspars as well as in olivine and various other minerals, the content of certain metal ions can have a wide range of values. These variations in composition are reflected in variations in the refractive indices and in the angle between the optical axes. That angle is also dependent on color as first noted by Herschel (1820), and on temperature.

Two papers on the important topic of how the crystal systems can be subdivided into classes on the basis of their symmetry, appeared around 1830. These papers by M.L. Frankenheim and by J.F.C. v. Hessel were however overlooked by others for some decades (see for instance Beckenkamp 1923 and Lima-de-Faria 1990, p. 46). Many numbering and naming conventions have been used for these classes.

9.2 On calcite in particular, and rock crystal (quartz)

All along, calcite was a big player in the development of crystallography and mineralogy, as is evident from the following quotes: “The calcite modification of $CaCO_3$ is one of the most extensively studied of all crystals” (Wyckoff 1924, p. 356), and “[Calcite is] in a scientific context the most important mineral species…the story of calcite is the story of mineralogy.” (Tschermak-Becke 1915, p. 529).

The prominent position of calcite may have two main causes. On one hand its crystal structure is sufficiently asymmetrical to demonstrate important features which distinguish crystals in general from those of the cubic system, but it is not too asymmetrical. See for instance Barlow (1883), and Kreutz (1908) remarks: “The high degree of symmetry in calcite allows one to note at once all irregularities in its appearance, which is much more difficult in less symmetric crystals”. On the other hand calcite crystals appear in a large number of forms (cf. Fig. 5-3), first catalogued in the very comprehensive investigation by Bournon (1808). He illustrates 59 modifications in 616 varieties, including what he calls the primitive rhomboid. However, I find only one rather loose reference to Iceland in his three volumes. Hauy‘s (1822, p. 305-355) list of 154 forms begins with the primitive one of cristal d‘Islande. Resuming Bournon‘s and Hauy‘s work, “…the most developed of all crystal groups is the rhombohedral calcite group” according to the geometrical monograph by Hochstetter (1854, extract). Irby (1878) enumerates over 200 simple forms, and many hundreds of composite forms. Bauer (1904, p. 578) states that about 280 simple forms are known, and “Calcite displays perhaps a greater variety of forms than any other mineral”. Similar expressions may be seen in Brauns (1903a, p. 386) and other sources.

Quartz was also studied intensively: “Quartz and calcite are probably the most important minerals, because of their wide distribution, their abilities to crystallize in a variety of ways, and their physical properties” (Beckenkamp 1912, p. 62). Quartz clearly possessed less symmetry than calcite, so that some of its most valuable properties are very different from those of calcite, for instance its optical activity. Quartz had a wide range of applications in physics because of its hardness, transparency, low conductivity for heat and electricity, and excellent elastic properties of quartz fibers. The pressure-induced voltages (piezoelectricity) exhibited by quartz attracted increasing attention in the late 19th century. Due to claims by Hauy (1817, 1822, p. xxxii) and others regarding such effects in calcite, pieces of Iceland spar intended for electrical measurements were offered in some catalogs of educational equipment until 1860 at least. However, these claims turned out to be quite erroneous (e.g. Curie and Curie 1880).

9.3 Properties of the crystals from Iceland

Around 1850 or even earlier, the following must have been known about the Iceland spar from Iceland, in relation to other calcite crystals:

1. It was composed of much purer calcite than other such crystals (see chapter 26 and Appendix 2). Calcite crystals from various locations on the European continent often contained impurities amounting to 0.3 to 5% (Doelter 1912, p. 275-276, Hintze 1930) while samples of the Icelandic material might contain less than 0.05%. Boeke (1915, p. 9) mentions that “In a few important cases, Nature is providing us with minerals which are even purer than the best products of technology”, citing Iceland spar as an example.

2. The crystals could reach very large dimensions, the largest one on record being described by Des Cloizeaux (1846-47). Its outcrop measured about 6 by 3 m.

3. The Icelandic crystals could be easily cleaved along three main directions, whereas such rhombohedrons were not commonly obtained from other calcite localities (cf. Naumann 1885, Hintze 1930). The cleavage planes were very flat and clean, so that polishing was unnecessary. This was an advantage in various experiments. However, it is not clear to me what proportion of the crystals from Iceland had the simple form of the fundamental rhombohedron when in their natural state.

4. In calcite crystals from all localities it was common to observe vesicles (sometimes containing liquid), cloudiness, inclusions, cracks, and twinning (i.e. when a crystal grows in two different mirror-image directions from the same plane). Other irregularities called "optical anomalies" (explained in section 22.4) were also noted, such as the presence of two optical axes instead of one (e.g. Madelung 1883). These problems were known in the material from Helgustadir, but that locality was the only one which also produced a quantity of large flawless crystals. "Particularly beautiful, large and transparent calcite crystals which are found in Iceland, are therefore preferred in experiments on double refraction" says Lummer (1909, p. 835).

In research employing X-rays around 1920 (see chapter 36) it was realized that the crystal structure of some individual samples of Iceland spar was closer to being perfectly regular than that in almost any other natural material. Partington (1952, p. 93 and 148) also mentions the occurrence of near-perfect crystals of diamond and quartz, while others are suspicious of the quartz, preferring for instance to test selected samples of common salt or zinc blende for comparison with theoretical predictions. It was often important for scientists to be able to make use of this quality in their studies. Here we may quote Cornu's (1874a, p. 2-3) introduction to results from his research on double refraction: "These experiments have been made mostly with prisms of Iceland spar, a substance which is especially suited for this type of studies, by its homogenity, its transparence, the geometrical perfection of its cleavage, and its strong double refraction.". Cornu continues on "…the constancy of its optical properties…so that a large number of physicists obtain almost identical results from it". He also states that other non-cubic crystals such as quartz, topaz, barium sulfate, saltpeter, sulfur and aragonite are much inferior materials for optical studies, due to one reason or another. The main disadvantage of Iceland spar according to Cornu, lies in its softness and difficulties of polishing flat surfaces in directions other than those of the cleavage planes.

10 Fresnel’s successors, 1820-40

10.1 Elastic waves

The papers by Young and by Fresnel (1822b, etc.) on interference, diffraction and polarization quickly led to a wide acceptance of the transverse-wave theory of light in France, see e.g. the physics textbook by Péclet (1823). Around 1820, scientists also began attempting a comprehensive analysis of how elastic waves (sound) are transmitted through solid materials. It is clear that this development was closely connected to the successes of Fresnel and others in optics. For instance, Cornu (1899) emphasizes that with the concept of transverse body waves, Fresnel had introduced an entirely new way in which nature transfers energy from one place to another. “The possible existence of waves which are propagated without change of density, has profoundly modified the mathematical theory of elasticity. Geometers…learned…from Fresnel the most general constitution of elastic media, of which they had not dreamed”. Similar views are expressed by Love (1927, p. 7-8): “Before the time of Young and Fresnel such examples of transverse waves as were known...were in no case examples of waves transmitted *through* a medium;... ”. And in his well-known historical treatise, Whittaker (1951) states that: “…under the stimulus of Fresnel’s discoveries, the best intellects of the age were attracted to the subject”. Among the first of these were members of the École Polytechnique, because of the relevance of material waves to engineering.

Various complex mathematical problems (cf. Fig. 10-1) were solved in this analysis of elastic waves, and it has been of great value ever since. Papers by three pioneers in the field may be mentioned here, C. Navier (1827, submitted in 1821), A. Cauchy (1823, Fig. 10-2) and S.D. Poisson (1829, 1831, see Lloyd 1834). Their papers considered ordinary solid materials like glass or metals. These materials turned out to transmit two types of waves: longitudinal (dilatational) and transverse (rotational). In modern seismology, they are known as respectively P- and S-waves. In a special case which simplifies computations and is still a good approximation for many common solids, Poisson found that the speeds of the two waves differed by a factor of $\sqrt{3}$. The next step was to set up and solve the wave equations for crystalline materials, where Fresnel had considered the elasticity of the aether to be dependent on direction, “…an unexpected condition and one of extreme importance, which has transformed the fundamental bases of molecular mechanics” (Cornu 1899). Cauchy (e.g. 1828) presented such equations; Poisson (1842) who also began a theoretical study of waves in crystals, was unable to complete it due to failing health. I have not studied the further development of that subject in detail, but Christoffel (1877) showed that a transverse elastic wave will split into two in an anisotropic material in a way analogous to birefringence.

Among other French investigators contributing to the science of mechanical stresses, elastic

Man setze ferner in den Werthen von l, n für $\sin\phi$, $\cos\phi$, wo sie allein vorkommen, die Werthe

$$\sin\phi = \sin\phi' \cos(\phi-\phi') + \cos\phi' \sin(\phi-\phi')$$
$$\cos\phi = \cos\phi' \cos(\phi-\phi') - \sin\phi' \sin(\phi-\phi'),$$

so erhält man

$$l = A^2 \cos(\phi+\phi')\{\sin^2\omega \sin\phi' \cos(\phi-\phi') + \cos\phi' \sin(\phi-\phi')\} + \sin\phi' M$$
$$n = \cos(\phi+\phi')\{A^2 \sin^2\omega \cos\phi' \cos(\phi-\phi') - (C^2+A^2\sin^2\omega)\sin\phi' \sin(\phi-\phi')\} + \cos\phi' M.$$

Es sei jetzt

$$C + A\cos\omega \operatorname{tang}\phi'' = \frac{l'+m'\cos\omega}{n+p\ \ \cos\omega}$$
$$A - C\cos\omega \operatorname{tang}\phi'' = \frac{l''+m''\cos\omega}{n+p\ \ \cos\omega},$$

so wird

$$l' = Cn + A\cos^2\omega\, m \qquad m' = Cp + Al$$
$$l'' = An + C\cos^2\omega\, m \qquad m'' = Ap - Cl$$

oder wenn man die zuletzt angegebenen Werthe von l, m, n, p substituirt:

$$l' = C\cos(\phi+\phi')\{A^2\sin^2\omega\cos\phi'\cos(\phi-\phi') - \sin\phi'\sin(\phi-\phi')\} + C\cos\phi' M$$
$$m' = A\cos(\phi+\phi')\{A^2\sin^2\omega\sin\phi'\cos(\phi-\phi') + \cos\phi'\sin(\phi-\phi')\} + A\sin\phi' M$$
$$l'' = A\sin^2\omega\cos(\phi+\phi')\{A^2\cos\phi'\cos(\phi-\phi') - \sin\phi'\sin(\phi-\phi')\} + A\cos\phi' M$$
$$m'' = -A^2 C\sin^2\omega\sin\phi'\cos(\phi+\phi')\cos(\phi-\phi') - C\sin\phi' M.$$

$$\mathfrak{N} = (R+G)u^2 + (P+H)v^2 + (N - 2\frac{PQ}{R} + I)w^2 + \text{etc.}$$

Enfin, si l'on pose

$$(51)\begin{cases} \mathfrak{A} = (L - 2\frac{QR}{P} + G)a^2 + (R+H)b^2 + (Q+I)c^2, \\ \mathfrak{B} = (R+G)a^2 + (M - 2\frac{RP}{Q} + H)b^2 + (P+I)c^2, \\ \mathfrak{C} = (Q+G)a^2 + (P+H)b^2 + (N - 2\frac{PQ}{R} + I)c^2, \end{cases}$$

Dans la deuxième série, on a $\varphi = 90^\circ$, et, par suite,

$$T_1 = \sin i - \frac{a \sin i \cos i}{b\sqrt{-A + a^2 A \sin^2 i}},$$
$$T_2 = -\sin i + \frac{a \sin i \cos i}{b\sqrt{-A + a^2 A \sin^2 i}},$$
$$T_1 - T_2 = 2\sin i\left(1 - \frac{a\cos i}{b\sqrt{-A + a^2 A \sin^2 i}}\right),$$
$$T_1 + T_2 = 0.$$

Ici les effets de gauche et de droite sont symétriques et l'on n'a pas de transport pour $i = 0$.

Dans la troisième série, on a

$$\varphi = 45, \quad \cos\varphi = \sin\varphi = \frac{1}{\sqrt{2}},$$
$$T_1 = \sin i + \frac{1}{2}\cos i\left[\frac{(1-a^2A)\sin i}{A\,ab\sqrt{-A+\frac{1}{2}(A\,a^2-1)\sin^2 i}} + \sqrt{2}\frac{B}{A}\right],$$
$$T_2 = -\sin i + \frac{1}{2}\cos i\left[\frac{-(1-a^2A)\sin i}{A\,ab\sqrt{}} + \sqrt{2}\frac{B}{A}\right],$$

or $\quad u^2\sin^2 i = a^2(\cos\alpha\sin\psi + \sin\beta\sin\phi)^2$
$\qquad + b^2(\sin\alpha\sin\psi + \cos\beta\sin\phi)^2 \ldots .(6),$
the relation between ϕ and ψ. Putting $\psi - \phi = \theta$, and taking account of (1), (6) becomes

$$2u^2\sin^2 i = \{a^2\cos^2\alpha + b^2\sin^2\alpha\}\{1 - \cos(D + i + \theta)\}$$
$$+ \{a^2\sin^2\beta + b^2\cos^2\beta\}\{1 - \cos(D + i - \theta)\}$$
$$+ 2(a^2\cos\alpha\sin\beta + b^2\sin\alpha\cos\beta)\{\cos\theta - \cos(D+i)\},$$

or $\qquad F\cos\theta + G\sin\theta + H = 0. \ldots\ldots\ldots .(7),$
where

$$F = a^2\{(\cos^2\alpha + \sin^2\beta)\cos(D+i) - 2\cos\alpha\sin\beta\}$$
$$+ b^2\{(\sin^2\alpha + \cos^2\beta)\cos(D+i) - 2\sin\alpha\cos\beta\},$$
$$G = (a^2 - b^2)(\sin^2\beta - \cos^2\alpha)\sin(D+i),$$
$$H = 2u^2\sin^2 i - a^2(\cos^2\alpha + \sin^2\beta - 2\cos\alpha\sin\beta\cos(D+i)\}$$
$$- b^2\{\sin^2\alpha + \cos^2\beta - 2\sin\alpha\cos\beta\cos(D+i)\}.$$

Now when D, regarded as a function of θ, is a maximum or minimum $\frac{dD}{d\theta} = 0$, whence from (7)

$$-F\sin\theta + G\cos\theta = 0;$$

and eliminating θ from this equation and (7), we have

$$F^2 + G^2 = H^2.$$

Putting for F, G and H their values, and reducing, this equation becomes

$$\sin^2(D+i)\,a^2b^2 - \{\cos^2\alpha + \sin^2\beta - 2\cos(D+i)\cos\alpha\sin\beta\}\,u^2a^2$$
$$-\{\sin^2\alpha + \cos^2\beta - 2\cos(D+i)\sin\alpha\cos\beta\}\,u^2b^2 + \sin^2 i.u^4 = 0. .(8).$$

This equation will be rendered more convenient for numerical calculation by replacing products and powers of sines and cosines by sums and differences. Treated in this manner, the equation becomes

$$\text{versin } 2(D+i)\,a^2b^2 - (A+B)\,u^2a^2 - (A-B)\,u^2b^2$$
$$+ \text{versin } 2i.u^4 = 0. \ldots (9),$$

where $\quad A = \text{versin } D + \text{versin } (D + 2i),$
$\qquad B = \cos 2\alpha - \cos 2\beta - \cos(D + 2\alpha) + \cos(D + 2\beta).$

If the principal plane AOC of the crystal bisects the angle between the refracting faces, we have $\alpha = \frac{i}{2}$, $\beta = \frac{\pi}{2} + \frac{i}{2}$, whence from (8), putting $D + i = \Delta$,

$$\left(a^2\sin^2\frac{\Delta}{2} - u^2\sin^2\frac{i}{2}\right)\left(b^2\cos^2\frac{\Delta}{2} - u^2\cos^2\frac{i}{2}\right) = 0.$$

Figure 10-1. Mathematical derivations in theories of double refraction could become quite complex. In some papers in 19th century journals they fill pages, and in doctoral theses even tens of pages. The formulas at the top are from Neumann (1835). Below, those on the left are from Cauchy (1839) and Billet (1859), while those on the right are from Stokes (1846).

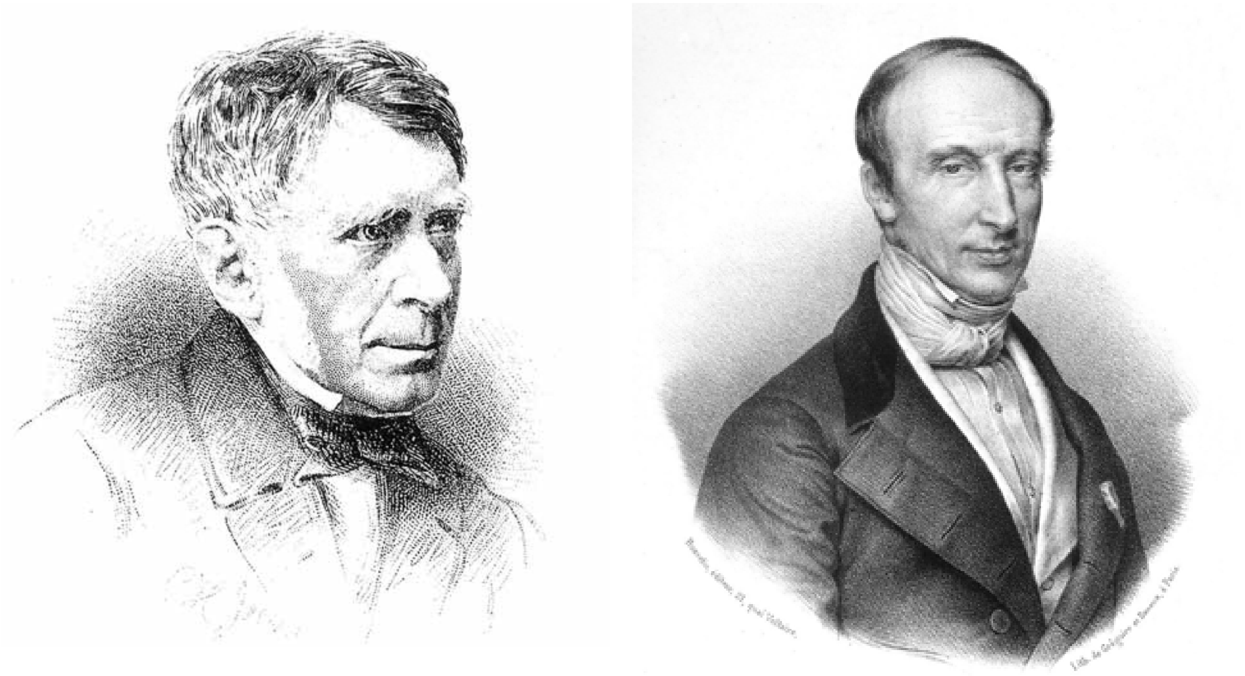

Figure 10-2. Two scientists who published important papers on polarized light after 1830; however, they are now chiefly known for their contributions to other fields of science. *Left:* G.B. Airy (1801-1892), astronomer. *Right:* A.L. Cauchy (1789-1857), mathematician.

waves and sound in materials after 1830, are P.A. Laurent and G. Lamé. Both also wrote papers on optics, including Lamé (1834). His works turned out to be useful later (see Timoshenko 1953, Gårding 1989), for instance where polarized light was employed in research on the elastic properties of materials (see Delanghe 1928).

10.2 Theoretical approaches to the aether problem on the Continent, to 1840

The aether and its elastic wave motion inside materials were contemplated by hundreds, or even thousands, of scientists until after 1890. The theoretical equations about that motion had to agree with the observations that had been made by Fresnel and others regarding the behavior of light at plane interfaces, the shape of the wave surface in doubly refracting materials, and so on. By about 1830 it was clear that if a transverse aether wave encountered a boundary between two different non-absorbing materials (such as glass and salt) it was impossible to satisfy simultaneously reasonable conditions regarding for instance continuity and conservation of energy, using only a refracted and a transmitted transverse ray: a ray performing longitudinal vibrations also had to arise. The theoreticians reacted by for instance giving this last ray an infinite speed.

In A. Cauchy's first theory of the propagation, reflection and refraction of light waves in transparent media around 1830 (e.g., Cauchy 1831; see reviews by Grailich 1856, p. 74-75 and Walker 1887) he assumed the motion of the aether to take place in the plane of polarization, rather than at right angles to it as suggested by Fresnel. At a similar time F.E. Neumann‘s (1832a) very comprehensive monograph reached the same conclusion as Cauchy. A fundamental aspect of Neumann's work is that the elastic constant of the aether is dependent on the material but its density is the same everywhere. Neumann (1832b) also presented a general theoretical derivation of wave propagation in uniaxial crystals like calcite. Cauchy (1836) however found a new solution to the wave problem, where the motion of the aether is at right angles to the plane of polarization. He considered this solution to be more realistic than his previous one, and continued improving his theory (e.g. Cauchy 1839a, see Fig. 10-1). Plücker (1839) and several others also addressed the issue of light-wave propagation around this time. Detailed theoretical accounts of many aspects of polarized light are given in books by Knochenhauer (1839) and Radicke (1839), both of whom were much in favor of the wave theory as developed by Cauchy.

10.3 Theoretical approaches to the aether problem in the U.K., 1820-40

Around 1820, research in the natural sciences was expanding in the U.K. (including Ireland), to a considerable extent due to the progress of mathematics and physics in France (Timoshenko 1953, p. 222). The emphasis was on theoretical aspects, and optics soon came to be studied. A translation by T. Young of Fresnel‘s (1822b) comprehensive paper was published in the Quarterly Review in 1827-29. Among those who further presented the works of Fresnel and Cauchy on light to their countrymen, were MacCullagh (1831), Powell (1835), and Smith (1839). MacCullagh (1836, 1837), Sylvester (1837) and Kelland (1838) wrote about the propagation of light in crystallized materials and at interfaces, utilizing a similar approach as Neumann. MacCullagh (1841) also contributed to the theory of optical activity (MacCullagh 1841) which Cauchy‘s models could not handle. Green (1842a) showed that Cauchy's above-mentioned second method of solution ran into difficulties with boundary conditions. With hindsight it may be said that all proposed types of aether, for instance those that resembled a jelly or a foam, were far-fetched, flawed, and/or inadequate in some way. See more on these matters in section 17.1, but the history of nineteenth-century theoretical optics is very complex (see chapters 5-7 of Darrigol 2012) and is only treated superficially in this report.

MacCullagh (1839) introduced a new type of aether, where energy was stored in rotational movements rather than in compression and tension as in ordinary elastic materials. The consequences of that model agreed quite well with known facts about the behavior of light in materials, but it received little attention for the next forty years. During these forty years, it was much debated whether the oscillations of the aether took place in the plane of polarization or at right angles to it. Some of the scores of papers which discussed the theoretical aspects of that problem, suggested experimental ways of deciding between the two possibilities. More on that in section 17.1. Among later reviews of the history of these issues we may mention those by Thomson (1887-88) and Glazebrook (1885, 1903).

In order to fully describe sound waves in solids, Green (1842b) argued that two independent elastic parameters were needed in simple isotropic materials like glass, their number increasing to 21 in the least symmetric crystal classes. Earlier, Poisson (1831, section 10.1 above) had in effect assumed that one of the two parameters had the same value in all isotropic materials. Similarly, Navier and Cauchy had considered 15 parameters to be sufficient in the latter case. This led to a long-standing controversy, which increased interest in experimental research on elasticity (Timoshenko 1953). See for instance in sections 15.3 and 21.4 below.

Airy (1833c, Fig. 10-2) presented in 1831 a valuable paper on the connections between double refraction and optical activity in quartz. It included comprehensive calculations of the interference patterns seen when quartz plates are viewed in convergent polarized light, and color diagrams of these. J. Müller (1834) who carried out further calculations and measurements of such patterns for uniaxial crystals in general, quotes Airy‘s work as being strong support for Fresnel‘s theories. J. MacCullagh made an extensive theoretical study of that matter after 1835, and his conclusions were confirmed experimentally by J. Jamin around 1850 (Verdet-Exner 1887).

10.4 Experiments in 1830-40

In the experimental field, two events in the U.K. strengthened the case for Fresnel's hypotheses on the propagation of light. One event concerned the case when a light wave in a biaxial crystal propagates in the direction of the dimple point L in Fig. 8-1. Soon after W.R. Hamilton derived algebraically how such a wave should give rise to a peculiar refraction effect, this "conical refraction" was observed by H. Lloyd (1833) who himself had been uncommitted in the undulation/emission discussion in his monograph on geometrical optics published in 1831. Lloyd's discovery attracted considerable attention and is still covered in textbooks on optics. The other event was an investigation by Airy (1833b) of the polarization of Newton's rings (which are seen when the surfaces of two objects, one or both being transparent, are almost in contact). His results agreed with the theoretical predictions. However, people continued being aware of the underlying flaws in Fresnel's derivations (Lloyd 1834).

Seebeck (1831, 1836) and Neumann (1837a,b) in Germany made measurements of the light reflected from natural and polished surfaces of calcite, also agreeing with theory. Liebisch (1891, p. 440) states that "The careful observations by A. Seebeck on the complete polarization of light by reflection from calcite….were of prime importance to the field of crystal optics" because they tested certain theoretical derivations by Neumann (1835b, cf. Fig. 10-1) and MacCullagh (1836). Rudberg (1829) measured the refraction of light in prisms cut from the biaxial minerals topaz and aragonite, and reported that his results were consistent with Fresnel's hypotheses. J.W.F. Herschel and J. Nörrenberg discovered independently in 1832 (see Neumann 1835a and books on physical crystallography) that the axial angle in some minerals varies significantly with wavelength. This "dispersion of the optical axes" as well as changes in the direction of the axes with temperature (Neumann 1835a) were later studied extensively but will not be dealt with here.

According to Cheshire (1923), the above-mentioned G.B. Airy constructed an instrument with glass mirrors for use in his experiments on polarized light around 1830. Various people later copied this instrument, in some cases replacing the mirrors with Nicol prisms (to be described in section 12.2), but Airy's role in its invention was forgotten. Seebeck (1827) also made a two-mirror polarizing instrument. They probably resembled that of J. Nörrenberg (Fig. 10-3) which was designed at a similar time (Hachette 1833, Buron 1844; see also section 18.2), but the first one to describe such a device in print may have been J.T. Mayer (1812), cf. an account in Die Naturwissenschaften 14, 511-512, 1926. In a catalog from an optical firm in Paris (Chevalier 1860), its founder is said to have invented in 1838 an instrument of a similar kind as Nörrenberg's, with a dark-glass reflector and a Nicol prism. The original Nörrenberg device could only display interference colors in thin crystal plates, strained glass and the like; later, a couple of lenses were added (cf. Pouillet 1847, Eisenlohr 1857, p. 283) as an option for observing Brewster's convergent-light figures in uniaxial and biaxial plates. The analyzer mirror could be replaced by a tourmaline or a Nicol prism.

Fr. Arago appears to have used his polariscope, along with arrangements of glass-plate, spar-rhomb and finally Nicol polarizers, for various studies of relative light intensity in the 1830s (N.N. 1833) and 1840s. In 1850 Arago (1858c, p. 231-250) described a photometer based on a Nicol prism, a double image prism and a plate of quartz with which he and P. Laugier made measurements of astronomical interest (cf. Trépied 1876). Among other things Arago (1858c, p. 261-281) estimated the amount of light from 18 stars. A modified version of one of his instruments, constructed in 1868 for research on the transparency of the atmosphere, is shown in Fig. 10-3.

In his prize essay on diffraction submitted in 1818, A. Fresnel had spoken of the undulation theory of light as being little known. As we see, things happened fast in the following years,

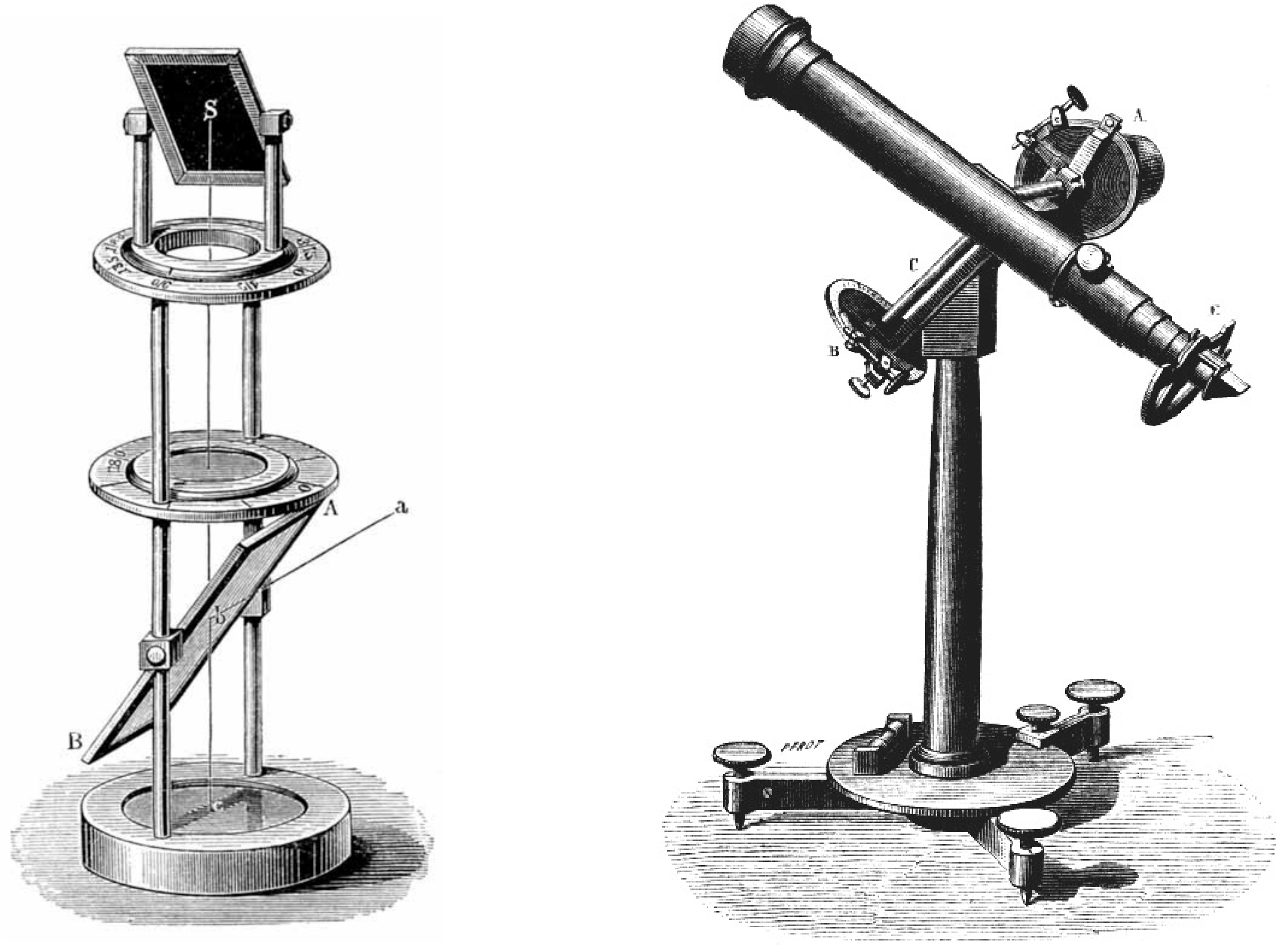

Figure 10-3. *Left:* A device employing a glass mirror to polarize light. It is often attributed to J. Nörrenberg but it was in fact first described by J.T. Mayer (1812). These instruments were used in optics instruction, simple testing, etc. Thin crystal plates could be placed on the central platform, for inspection in the polarized light from the lower mirror. The picture is from Drude (1900a). *Right:* F. Arago invented photometric instruments to study for instance the intensity of light from stars. The picture shows an improved model of one of these, designed in 1868 by J. Duboscq (1885).

and most scientists had been converted to it by the early 1830s (Baumgartner 1830, p. 573-576; Herschel 1833; Silliman 1975, p. 157; Buchwald 1989, p. 291-297). Fechner (1832, Fig. 10-4) states that it readily explains many observations which the corpuscular emission theory could handle only with the introduction of precarious assumptions, or even not at all. Although Fresnel‘s work on diffraction (section 7.1) must have played a part in convincing the scientific community, Fechner emphasizes that the wave theory is particularly indispensable for understanding the interesting and remarkable phenomena of polarization. Airy (1831, Fig. 10-4) also takes the transverse character of light waves for granted. Moigno (1842-44) is of the same opinion in a major historical review of the two competing theories.

10.5 Infra-red radiation, dispersion and other matters 1812-50

In the earliest 1800s scientists such as W. Herschel, T. Young and J. W. Ritter studied the two kinds of invisible radiation emitted by the Sun. One kind (cf. rays from hot objects and fire) was distinguished by its calorific effects which were most prominent at the red end of the visible spectrum and beyond. The other kind which extended past the violet extremity of the spectrum, produced chemical effects such as darkening of silver halides and bleaching. Young and later F.

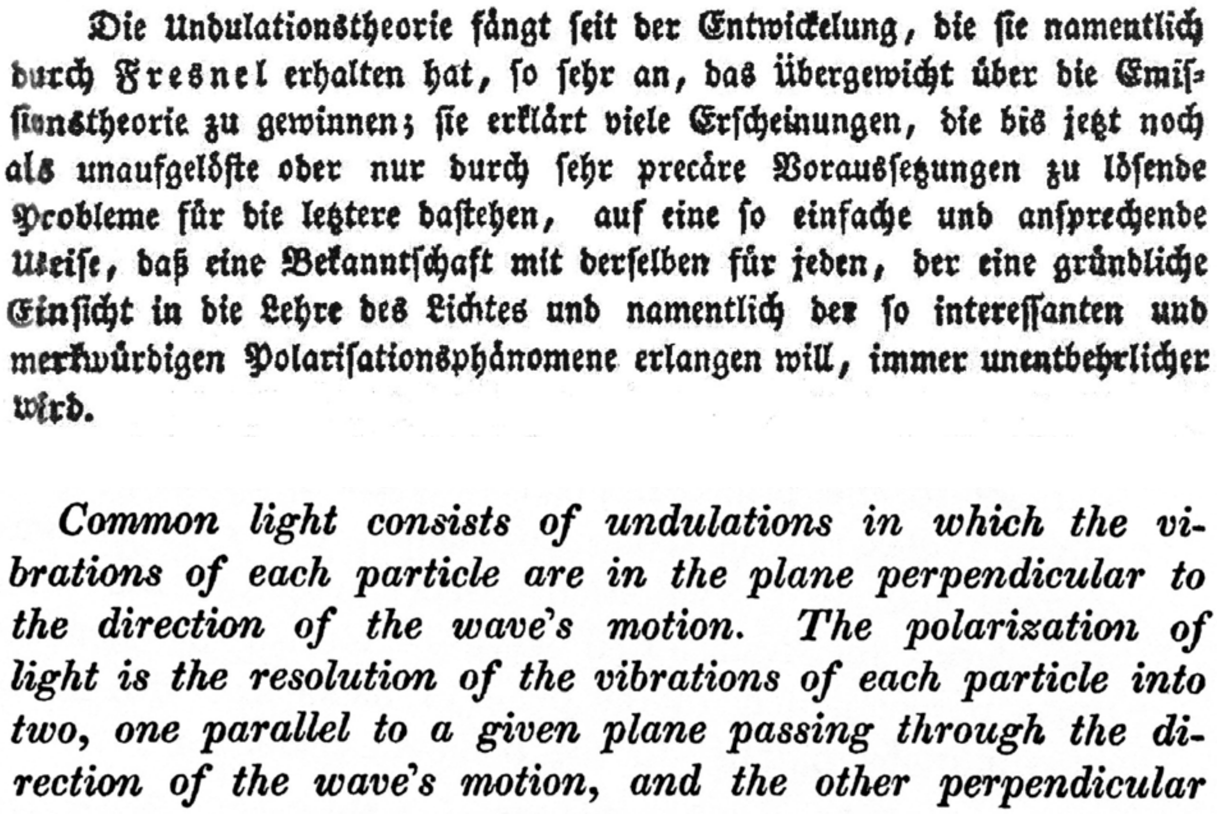

Die Undulationstheorie fängt ſeit der Entwickelung, die ſie namentlich durch Fresnel erhalten hat, ſo ſehr an, das Übergewicht über die Emiſſionstheorie zu gewinnen; ſie erklärt viele Erſcheinungen, die bis jetzt noch als unaufgelöſte oder nur durch ſehr precäre Vorausſetzungen zu löſende Probleme für die letztere daſtehen, auf eine ſo einfache und anſprechende Weiſe, daß eine Bekanntſchaft mit derſelben für jeden, der eine gründliche Einſicht in die Lehre des Lichtes und namentlich der ſo intereſſanten und merkwürdigen Polariſationsphänomene erlangen will, immer unentbehrlicher wird.

Common light consists of undulations in which the vibrations of each particle are in the plane perpendicular to the direction of the wave's motion. The polarization of light is the resolution of the vibrations of each particle into two, one parallel to a given plane passing through the direction of the wave's motion, and the other perpendicular

Figure 10-4. Most French scientists quickly adopted A. Fresnel's views on the nature of light as a transverse vibration in the 1820s. The sentences above show that the evidence in favor of this theory had also convinced notable persons in the U.K., Germany and elsewhere by the earliest 1830s. *Top*: From Fechner's (1832, p. 345) book. *Bottom*: From a lengthy essay by Airy (1831, p. 339).

Arago showed that both kinds could form interference patterns. Bérard (1817; Biot 1816c IV, p. 602-617) and Erman (1819) found among other things that they were polarized by reflection from glass mirrors in the same way as visible light. Bérard also used an Iceland spar rhomb to demonstrate polarization of the calorific rays. His findings met with some scepticism (Berthollet et al. 1813, Powell 1830-31) and the matter was not pursued further for a while. Some people who acknowledged that heat radiation might be a wave motion, believed that its nature was different from that of visible light, it perhaps taking place in another aether substance. According to Barr (1962), A.M. Ampère (1832, 1835) became the first scientist to claim that the heat waves were simply light which the human eye could not perceive.

M. Melloni published extensive research from 1831 to 1854 on heat rays, later becoming known as infra-red radiation. At first he studied mostly their transmission through a large number of solids (including Iceland spar) and liquids, with the aid of a very sensitive electric thermometer. From 1835 he conducted observations on the reflection and refraction of the heat radiation, then moving to its optical rotation in quartz (Biot and Melloni 1836) and other polarization properties (Melloni 1836, 1837). Melloni used tourmaline, rock salt and tilted plates of glass or mica rather than calcite in his polarization work. Forbes (1835, 1836a,b, 1838) also carried out a long series of experiments on the double refraction and polarization of heat radiation, with similar equipment. His results generally agreed with those of Melloni. Forbes already in 1835 concluded that heat rays were a transverse wave radiation like visible light, on the basis of his polarization results rather than for instance evidence of interference.

The next observations on the polarization of chemical (later called ultra-violet) rays that have come to my attention, were made by Sutherland (1841) using Iceland spar rhombs and tilted mica sheets. Melloni (1842) who had originally intended to find some difference in the character of light and heat rays, finally agreed with Forbes‘ conclusion (Dictionary of Scientific Biography 1980-90, Barr 1962) and emphasized that the only difference between the infra-red, visible, and ultra-violet radiations lies in their wavelengths. Fizeau and Foucault (1847), Knoblauch (1848, 1852), and Provostaye and Desains (1849a, 1850a) made comprehensive experiments on the polarization of infra-red rays by reflection and by refraction, partly with Iceland spar rhombs and Nicol prisms (see section 12.2). The plane of polarization of these rays also rotated when passing through turpentine and sugar solutions (Provostaye and Desains 1850b). In short, they behaved just like light in these respects. Wartmann (1851, cf. Duboscq 1885) devised a sort of telescope containing a large Nicol prism (7.5 cm long) and a thermometer to investigate the polarization of thermal radiation from the sky. He found it to depend on direction in the same way as that of visible light. By replacing the thermometer with a photographic plate, the polarization of the ultraviolet sky-light could also be demonstrated.

Rudberg (1831) made extensive measurements of the dispersion of light in various crystals including Iceland spar. It was pointed out by Brewster (1833) and others that the undulation theory did not explain that property, even in simple transparent materials like glass or water. This criticism was encountered by A.L. Cauchy who derived equations for the general change of refractive index n with wavelength λ in 1835. Although Cauchy's assumptions were rightfully criticized by some colleagues at the time, his relation in the form $n \sim A + B/\lambda^2 + C/\lambda^4$ ... was in wide use and of great value in practical optics for the next forty years. Derivations of similar dispersion formulas from the wave theory were also suggested in the mid-1830s by for instance B. Powell, P. Kelland, and G. Lamé, based on different views of the aether. Some tried to explain double refraction and dispersion simultaneously (cf. chapter 21 of Verdet-Exner 1887). See section 21.2 for a satisfactory physical explanation of dispersion.

11 Indications of anisotropy, 1820-35

Many bulk properties of material objects, such as their temperature or density, may be described by a single number and its associated units of measurement. However, there are also material properties which vary with direction within an object; these properties are connected to vector quantities. The view that such directional dependence may occur in crystals, is said by some to have been first expressed by Weiss (1804). However, his discussion is somewhat difficult to understand, and it was criticized at the time. See also the remark by Young (1809) referred to in section 6.6. This phenomenon which has turned out to be a very important aspect of crystal physics, was named anisotropy. The first example of the term which I am aware of, is in the book by Beer (1853) while the usage of isotropy goes back at least to papers by A. Cauchy in 1839. The synonym äolotropy which may have originated at a similar time, appears in some publications up to the early 20th century. This characteristic is inherent in all the crystal systems except the cubic one.

In the summer of 1823, E. Mitscherlich was carrying out research with the famous chemist J.J. Berzelius. Among other things he measured the angle between the sides of an Iceland spar crystal twice in the same day (see obituary by G. Rose, 1864), but in between the measurements the laboratory room had been warmed by sunlight. As a result, the angle had changed; not much but measurably because Mitscherlich's goniometer was quite accurate and the cleavage planes of the crystal were very flat. This was most unexpected, so Mitscherlich started measuring the angles between the faces of Iceland spar and of some other crystals at many temperatures. The Iceland spar was found to expand with temperature in the direction of the optical axis, while it contracted in directions at right angles to it. This caused the above-mentioned angles to change by about 1 minute of arc per 10°R, i.e. about 12°C (Fig. 11-1). The results (Mitscherlich 1825) generated much interest: the linear thermal expansion of solids had of course been measured before, but generally by heating of long multicrystalline or glassy rods. No one had looked for directional variations or changes of shape.

Such thermal changes were studied in many other crystalline materials during the next several years. Rudberg (1828, 1831) and others measured the expansion of Iceland spar and various other crystals with improved accuracy over a wider temperature interval, and attempted to correlate it with changes in refractive indices. Corresponding measurements on crystals with two optical axes (such as gypsum) gave complicated results regarding for instance the direction of an "axis of expansion" relative to their optical axes (e.g. Neumann 1833). Neumann (1834) also initiated a study of the directional dependence of elastic properties in crystals, but his theoretical approach was later found to be inadequate.

Frankenheim (1829) made a thorough qualitative survey of the hardness of various crystals,

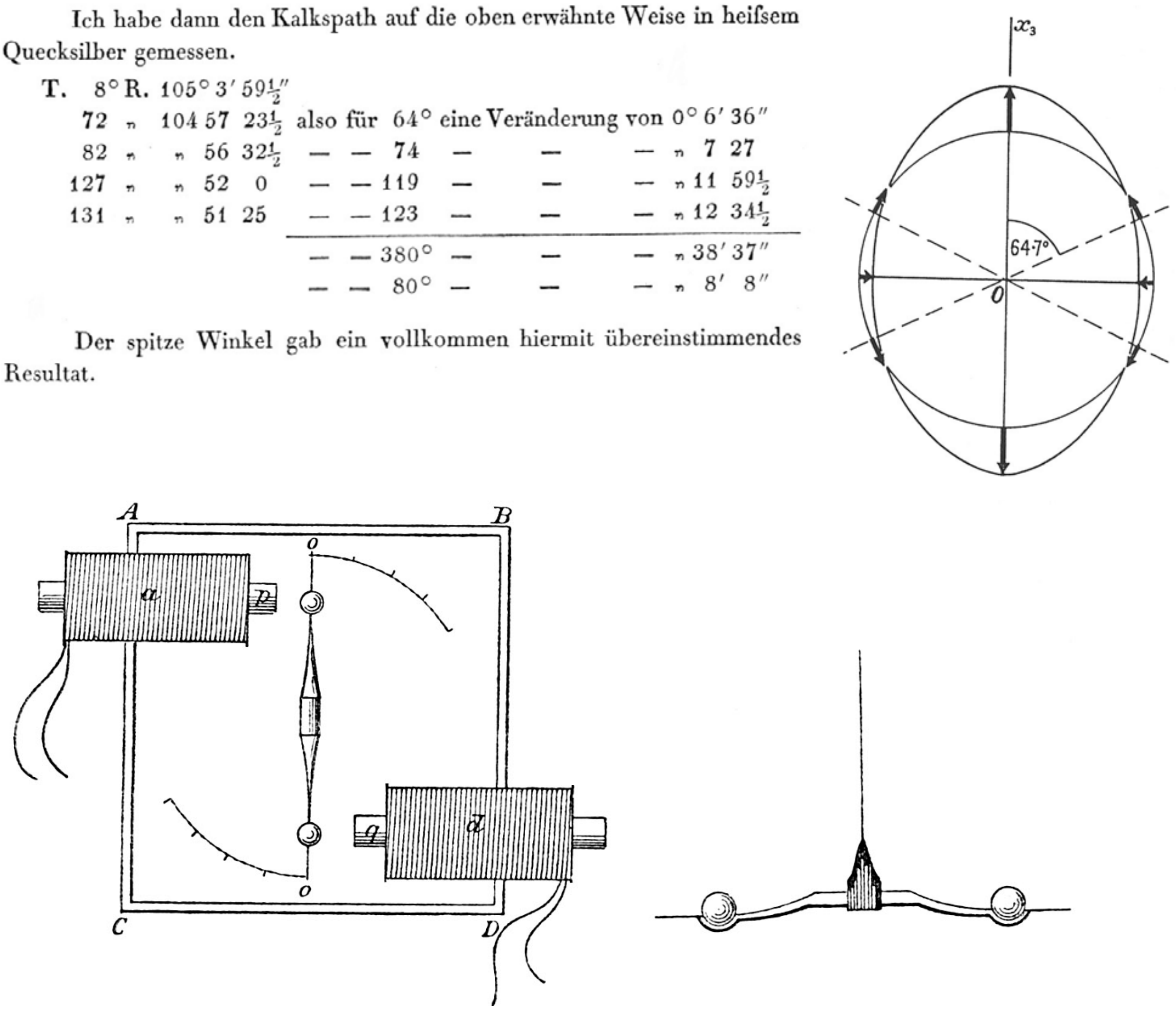

Ich habe dann den Kalkspath auf die oben erwähnte Weise in heiſsem Quecksilber gemessen.

T. 8° R.	105° 3′ 59½″			
72 „	104 57 23½	also für	64° eine Veränderung von	0° 6′ 36″
82 „	„ 56 32½	— —	74 — — —	„ 7 27
127 „	„ 52 0	— —	119 — — —	„ 11 59½
131 „	„ 51 25	— —	123 — — —	„ 12 34½
		— —	380° — — —	„ 38′ 37″
		— —	80° — — —	„ 8′ 8″

Der spitze Winkel gab ein vollkommen hiermit übereinstimmendes Resultat.

Figure 11-1. Experiments on anisotropic properties of Iceland spar. *Top left:* Data recorded by Mitscherlich (1825) from measurements of the angles between the sides of an Iceland spar crystal at various temperatures. *Right:* Let us slice an Iceland spar crystal along a plane containing its optical axis (x_3) and paint a circle on that plane. If we then heat the crystal, the circle will change into an ellipse. The picture (from J.F. Nye: Physical Properties of Crystals, 1957) is greatly exaggerated. *Below:* In the experiment by J. Tyndall (1851) the pole of a magnet pushed an Iceland spar sphere away from itself with a 10% greater force, when the optical axis was parallel to the field as compared to when the axis was perpendicular to the field. On the left the view is from the top, on the right it is from the side. Drawing from Liebisch (1891).

finding it to be generally dependent on direction. This was confirmed by Seebeck‘s (1833) quantitative measurements in the case of calcite. Savart (1829) studied the oscillations of circular plates made from crystals (mostly quartz, but also chaux carbonatée transparente, some other minerals, and wood), concluding among other things that the elastic constant (Young’s modulus) along the optical axis of these minerals was different from that at right angles to it.

In section 7.3 it was described how Brewster (1816a,b) and others investigated the occurrence of stresses and double refraction (caused by pressure or unequal heating) in otherwise isotropic materials like jelly or glass. F.E. Neumann (1843) published a major theoretical study analysing these effects in greater detail than had been done previously. He also tested his conclusions experimentally in a few cases similar to those of Brewster, using glass models observed through calcite prisms or tourmaline. As an example, a glass rod of rectangular cross section which is bent by a load, exhibits in monochromatic polarized light a pattern of light and dark stripes (Fig. 11-2).

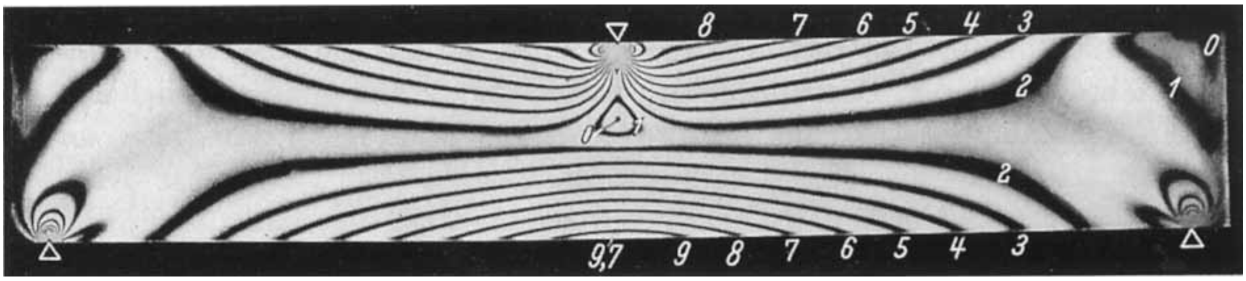

Figure 11-2. Neumann (1843) followed up on the discovery by Seebeck (1814) and Brewster (1816a,b) that glass becomes anisotropic and exhibits double refraction if it is under stress from externally applied forces or unequal heating. After 1850, G. Wertheim and J.C. Maxwell carried out further research on this aspect. The diagram which is of a more recent date (Föppl and Mönch 1959) shows the interference pattern appearing in a bent rectangular glass rod, illuminated by polarized light and viewed through an analyzer.

These stripes reflect in a certain way the state of stress within the glass. If we understand the physics of the relationship between the local non-hydrostatic stress in an initially isotropic material and its birefringence, then we have at our disposal a straightforward but powerful method for studying the internal stresses and deformations caused by forces applied to solid objects, and hence their mechanical strength. To quote Timoshenko (1953, p. 249): "The most important contributions made by Neumann to the theory of elasticity are included in his great memoir dealing with double refraction.".

Duhamel (1832) wrote a theoretical paper on the conduction of heat in substances whose conduction coefficients would be dependent on direction. He may however have had in mind examples like wood which had been studied experimentally, rather than crystals. Few people paid notice to his work, and the matter was dormant until around 1850, see section 15.2. With the benefit of hindsight, it is now evident why this property and various others should be anisotropic in crystals. The very fact that their cohesion (i.e. resistance to cleavage) varies a great deal with direction indicates that the forces between their constituent particles have directional preferences. The appearance of dichroism and pyroelectric effects in some minerals like tourmaline was also known to be related to their symmetry axes. See a remark made by J. Tyndall (1855, footnote p. 5).

12 On instrumentation, 1820-40

12.1 Beam-splitting prisms

As indicated in section 6.4 above, so-called double image (or beam-splitting) prisms are made by gluing together two wedges of a doubly refracting material, with different orientations of their optical axes (Fig. 12-1). Wollaston (1820) invented a prism that makes the two polarized components of a light beam diverge more from each other than Rochon's prism of the same dimensions does. However, as both the rays from Wollaston's prism are deviated, the angular dispersion of their colors is sometimes a disadvantage. The angle between the two rays can be 15-20° if calcite is used (Wright 1919a), while it is less than 1° with quartz which was chosen by Wollaston for the purpose of measuring small angles. Pearson (1822, 1829 p. 201-231) measured the angular diameters of planets with devices containing Rochon-type prisms from quartz. Arago (1847) also made thousands of such measurements, and some of his results were listed in yearbooks of the Bureau des Longitudes. Telemeters based on this concept (see Fig. 13-7) were being advertised by optical workshops from the 1840s onwards (Chevallier 1845, Deleuil 1848). Applications for beam-splitting prisms which will be mentioned occasionally below, are however seldom connected with telemetry. Rather, they are used when one wishes to observe only one of the two images at a time, or to compare them (Bennett and Bennett 1978, p. 56-61 of section 10). Such prisms seem to have been common before Nicol prisms (next section) became the prime choice as polarizing devices in the 1830s. Birefringent beam-splitting prisms are still being manufactured for use in various optical instruments and experiments.

Instead of both wedges being made out of Iceland spar, a less expensive beam-splitting alternative consisted of a spar wedge glued to a glass wedge. With proper selection of the wedge angles and of the refractive index of the glass, one ray (which could be the ordinary or the extraordinary one) passed straight through the combination. They were called achromatized spar prisms, although the glass wedge never compensated fully for the dispersion of the spar wedge. Judging from papers, books and equipment catalogs they appear to have been convenient for qualitative and semi-quantitative observations on polarized radiation as well as for educational purposes (Fig. 12-2), etc. even into the 20th century (Arago 1811, Biot 1816c, 1840, Albert 1828, Provostaye and Desains 1849a, Beer 1853, 1882 p. 290-291, Frick 1856, Lutz 1872, Pellin 1899, Lummer 1909, p. 840-846, Rayleigh jr. 1918, Bruhat 1930, p. 57, Hardy 1935). In some of these prisms (Duboscq 1870, 1885) the angle of the glass wedge was variable in order to achromatize both the rays. Abbe (1884, see section 22.4) invented a variant consisting of a 60° prism of Iceland spar between two 30° glass wedges; it was used as an analyzer in some types of microscopes and projectors.

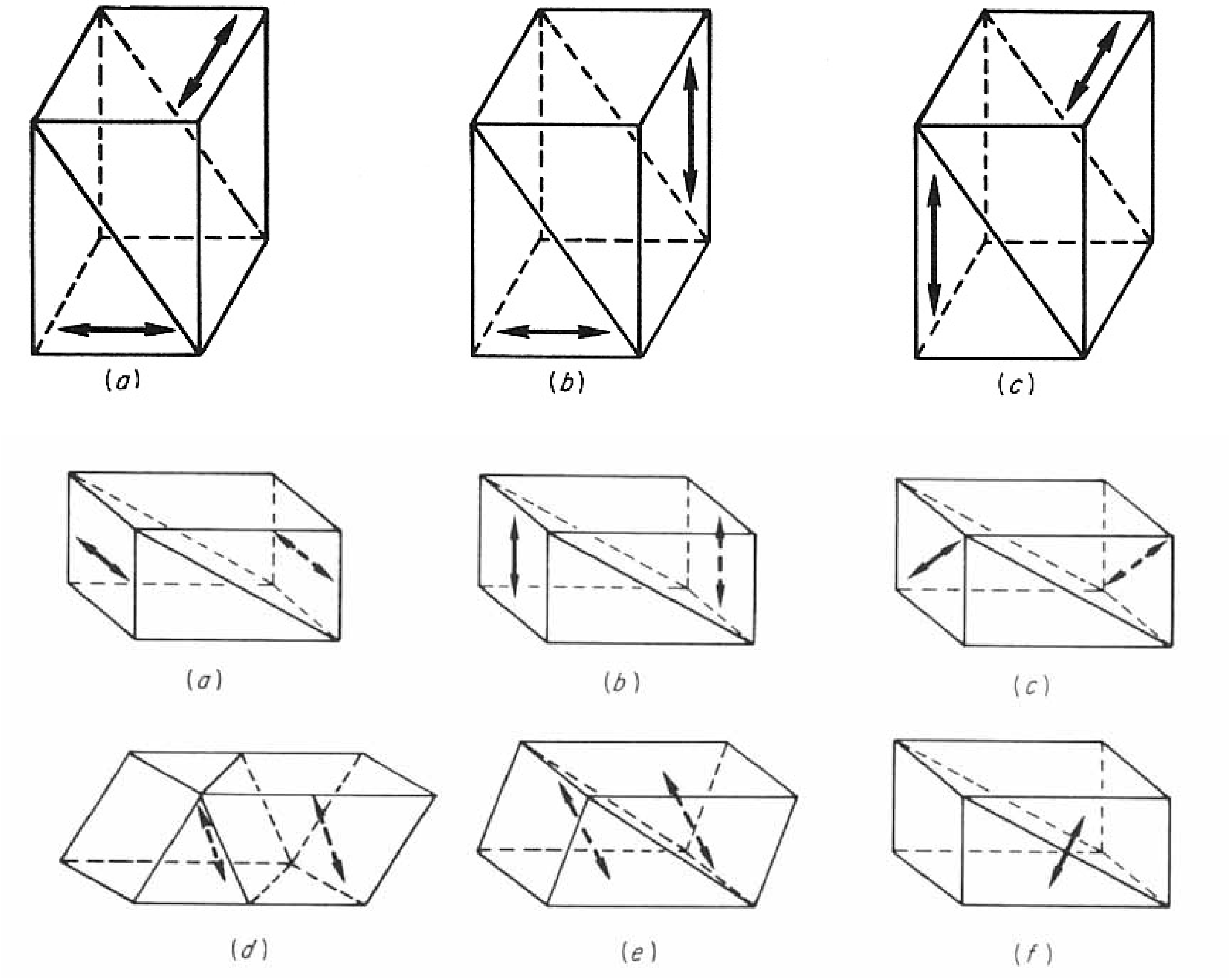

Figure 12-1. *Top:* Schematic diagrams of three common types of beam-splitting birefringent prisms, usually made from Iceland spar or quartz. If a beam of unpolarized light is incident on such a prism horizontally from the left, two polarized rays diverge from it towards the right. (a) Rochon prism, (b) Senarmont prism and (c) Wollaston prism. Arrows indicate the directions of optical axes. *Center and bottom:* Schematic diagrams of six common types of polarizing prisms where one ray is discarded. Arrows indicate optical axes. (a-c) a Glan-Thompson (or Glazebrook) prism, a Lippich prism, and a Frank-Ritter prism. (d-f) are an original Nicol prism, a Halle prism and a Hartnack-Prazmowski prism. The two halves are sometimes separated by an air gap instead of a resin cement or oil. From Bennett and Bennett (1978).

12.2 The Nicol prism, 1829: an invention of great importance

In research where a beam of partially polarized light from an object is being studied, it is often only necessary to make use of that component of the light which is polarized in a particular direction. The intrusion of the beam of perpendicularly polarized light into the observer's field of view can then be disturbing. As already explained, Rochon's prism solved this problem by deflecting the unwanted beam sideways, Wollaston's prism by deflecting both beams sideways in different directions.

Becker (1903, p. 255) and Lummer (1909, p. 840) describe an alternative method where a natural calcite rhomb is placed in a tightly fitting metal tube, having diametrically opposed hole pairs of various sizes to peek through. Another possible way was to roughen a spot on the face of a calcite rhomb held close to the observer's eye, to stop the unwanted beam. Brewster (1819, 1829a) pointed out that by coating such a roughened spot with a liquid of suitable refractive index, one beam would pass through it relatively unharmed while the other one would be diffused

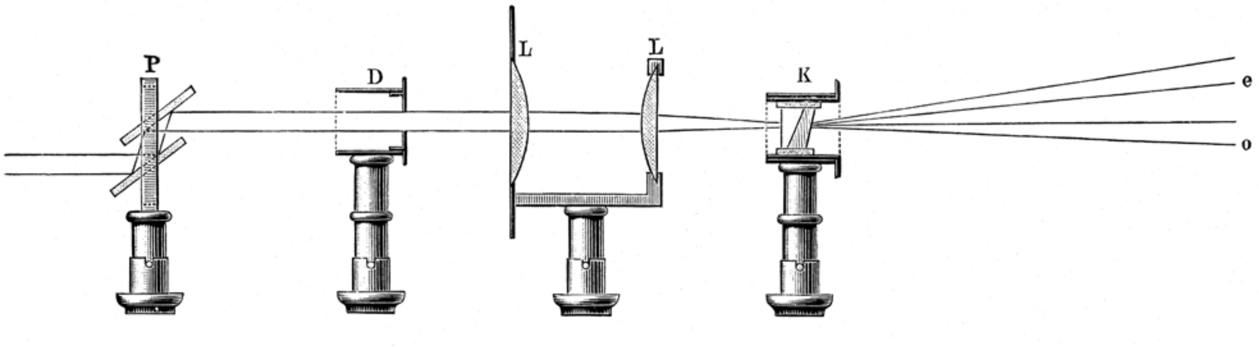

Fig. 12-2. A demonstration experiment with an achromatized calcite-glass prism K. Polarized light from the glass mirrors P passes through a small hole in the diaphragm D and forms two images of the hole to the right. Their intensities vary if K is rotated about the direction of the incident beam (Lummer 1909).

at the coated surface and thus become practically invisible. He later (Brewster 1831, p. 164) advised "sticking a black wafer" on a 3" thick piece of Iceland spar to block out one image. These techniques may have been widely used for quick inspection of polarized light, although I have not seen any papers indicating explicitly that the writers were familiar with them.

W. Nicol in Edinburgh realized that the best solution to the overlap problem would be to make one of the two polarized rays disappear altogether. He accomplished this by slicing an oblong rhomb of Iceland spar diagonally (Figs. 12-1, 12-3) and gluing the pieces together with wood resin (Canada balsam). Its refractive index was such that the extraordinary ray in the spar passes through it while the ordinary one suffers total reflection at the glue. The latter ray could then be for instance absorbed by a coat of black paint or graphite on the lateral surface of the crystal. Any directional component of the incident light could be selected for transmission, by rotating the prism around the beam heading or by making corresponding provisions at the source of the light. Nicol's (1829) modest note describing this invention has probably had a greater impact than most other scientific papers of comparable length. These devices, which were named after Nicol and gained popularity within a few years, were often employed in pairs: one as a polarizer of ordinary light and the other (sometimes smaller) one along with accessories as an analyzer of that light after some interaction with matter.

The production of prisms from Iceland spar is not an easy task. It had to be relatively free from defects, which could occur even in the best material from Iceland (see Goldschmidt 1907, Hughes 1937). Iceland spar is quite soft, but it cracks or splits easily along its three main cleavage directions. Instead of cutting a single natural rhomb into two diagonal wedges, two rhombs were often ground down to the wedge shape to reduce the risk of breakage. The hardness of the spar crystals varies with direction, and flakes could get detached during grinding (Halle 1921). The precise adjustment of two Nicol prisms along the same axis was difficult (Glazebrook 1880b) and careful handling was needed. For instance, exposure to too much light could cause heating and damage to the glue (Laurent 1879, Sleeman 1884, Schulz 1925, Schumann and Piller 1950).

12.3 Other means of producing and analyzing polarized light

Two other methods were at this time available for producing polarized light and analyzing it. One was based on the fact that light reflected from glass at the Brewster angle is linearly polarized. This method has always been used to some extent in instruments (e.g. Fig. 10-3, Fig. 13-1; section 33.1), especially if a wide field of view was required. It has however some drawbacks:

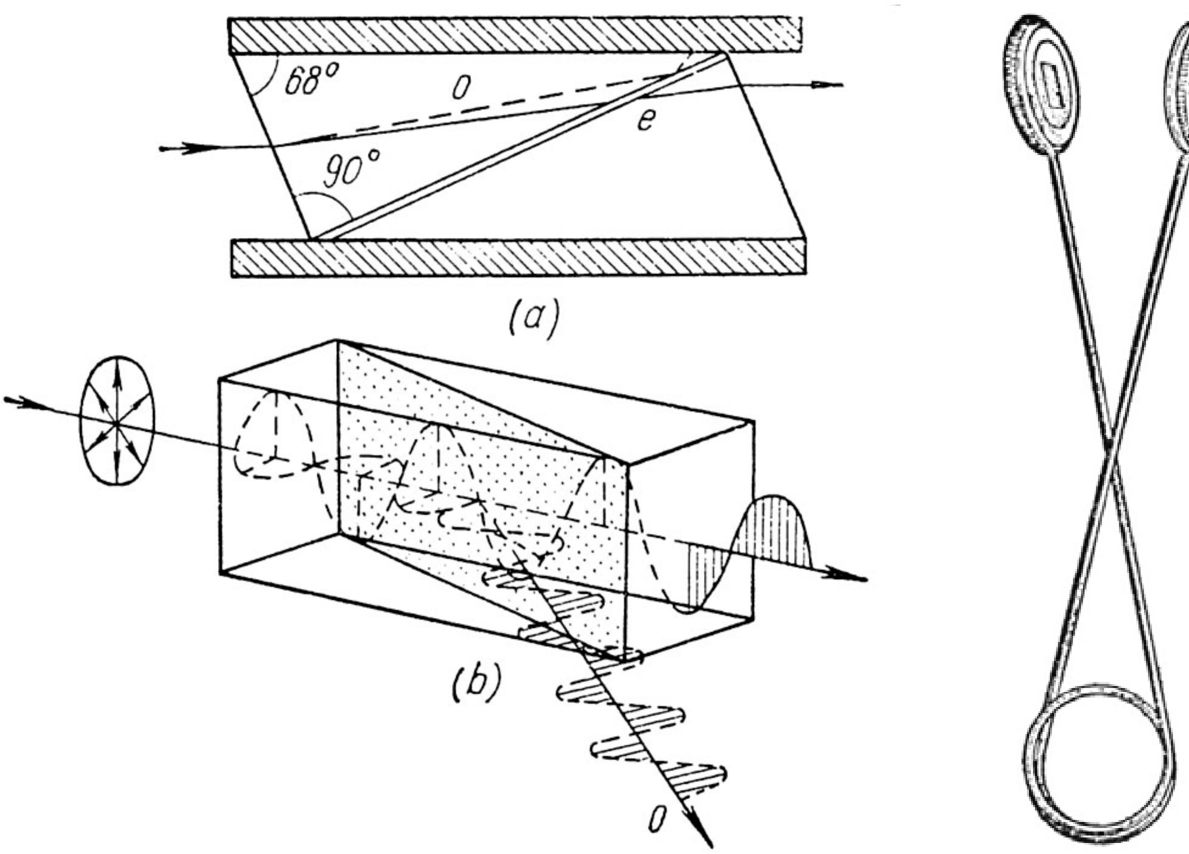

Fig. 12-3. *Left*: (a) A light beam enters a Nicol prism from the left. The prism divides it into two rays o and e, each linearly polarized. The o-ray is reflected sideways from the Canada-balsam cement and is discarded, but the e-ray continues through the other half of the prism. (b) Here the prism has been rotated 90° about the direction of the light ray. *Right:* Tourmaline tongs, a simple device for observing double refraction in minerals. From Wood (1977).

one is that only about 15% of incident unpolarized light is reflected, while a Nicol prism delivers about 40%. Light that has passed through a pile of 10-15 glass plates tilted at the Brewster angle to the beam is also almost linearly polarized. See section 33.1.

The other method was based on the phenomenon of dichroism, already mentioned. It is due to the fact that doubly refracting substances absorb the two polarized light components in different amounts. In calcite this difference is so small as to be of no consequence, but one needs only a 1-2 mm thick plate of some minerals to extinguish one ray almost completely. Such plates, however, also have drawbacks, including the absorption of both rays generally being color-dependent (Talbot 1834a; Pereira 1843; Rosenbusch 1885, p. 109-111). The mineral tourmaline has been most used for this purpose from around 1820, but other drawbacks include its brittleness (Barnard 1863). The main application of this method has been in simple devices, such as so-called “tourmaline tongs” (Fig. 12-3) for quick testing of the optical properties of gemstones.

12.4 Optical activity, continued – Biot 1832-40

Here we have to start with a discussion of the term “sugar”, which can apply to many substances having certain similar properties. Fundamental aspects of their structure and chemical behavior were not clarified until after 1900. Solutions of most sugar compounds are optically active, but in a variable degree and either to the right or left. They may be divided into mono-, di- and trisaccharides, plus polysaccharides such as starch from grain or potatoes. All belong to the class of carbohydrates. The most common monosaccharides which contain a chain of n= 5 carbon atoms (pentoses) or 6 (hexoses), have a general formula $(CH_2O)_n$. They are called aldose and ketose sugars depending on the presence of an aldehyde or ketone group at one end of the chain. The best-known monosaccharides are the aldohexoses glucose (grape sugar) and galactose, and the ketohexose fructose. Of these, glucose may be considered the most important molecule in the living world. The most familiar disaccharide is sucrose (saccharose, ordinary sugar) with 12 carbon atoms and 11 units of H_2O. Its original source as a foodstuff was sugar cane which was chiefly cultivated around the Caribbean. However, it was known already before 1800 that sucrose could also be obtained from a species of beet. Due to a blockade of ports in the Napoleonic wars, production of beet sugar in Europe increased greatly in 1806-15 but it then fell off and was not resumed until around 1840. In 1811 it was discovered that a sugary material could be made from starch by the action of acids (hydrolysis), but the precise nature of this material and other sugars remained uncertain for a few decades yet.

J.B. Biot who had discovered optical activity in organic liquids and solutions (section 6.8), realized that measurements of this property could be a valuable aid in research on such compounds. After having worked in unrelated fields of science during 1820-32, he pointed out (Biot 1833) the usefulness of the method in estimating the sugar content in juices from fruits or other parts of plants. He also began a study of the effects of acids upon sugars and starch (Biot and Persoz 1833). Among these effects is a change in optical activity, in some cases from left-handed to right-handed rotation or vice versa. Biot's (1835) term describing this process, "inversion", is still used. So is the name "dextrine" given by Biot and Persoz to a water-soluble viscous material obtained from starch with acids, or by heating it to more than 120°C. The name reflects the fact that it rotates polarized light strongly to the right. The dextrin (which is not a pure compound, but a mixture of many carbohydrates of various molecular sizes) soon acquired practical importance as an ingredient in bakery products, drinks, sweets, and glue. The increased knowledge of the character of starch compounds prompted further studies on them, with Payen and Persoz (1833, 1834) becoming the first to describe a biological catalyst, i.e. an enzyme. This material which they isolated from germinating barley and called "diastase" (now: β-amylase) transformed starch in a similar way as heating or acid treatment. More on sugar compounds will be presented in sections 13.2 and 18.1, including the processes involved in hydrolysis and fermentation.

Biot (1818c) found with a rather inaccurate type of polariscope, that any optically active organic liquid exhibited approximately the same amount of this activity per unit mass, whether it was measured in pure form, dissolved in an inactive liquid, or even as a gas. The gas part of these results was however only obtained from a single measurement with turpentine vapor in a 30-m long glass tube just before it exploded. That experiment was not repeated for almost half a century (Gernez 1864). Biot (1835) hence defined the term "specific rotatory power" of a compound. The term is still in use, but with improved instrumentation it was found that this property was to some extent dependent on the solvent used, the concentration of the solution, and the temperature, see for instance in Landolt (1898) and Partington (1953).

Biot had discovered early on, that the optical activity of both quartz and organic liquids varied approximately as the inverse second power of wavelength of the light used. Solutions of tartaric acid and its derivatives constituted a significant exception from this general relation, and Biot (1838) carried out a very thorough investigation of their optical properties. This behavior which was called "anomalous rotatory dispersion" was to have considerable impact upon the chemical sciences, as will be presented in section 16.2 and later.

13 Improvements to Nicol prisms; microscopes, polarimeters and measurements of optical activity, 1840-50

13.1 Introduction: prisms and microscopes

Polarized light had become a well-known subject in experimental science by 1830, as may be seen e.g. from an advertisement by J.W. Albert (1828). He was selling a variety of prisms, plates, etc. of Iceland spar and other crystals for experimentation. I have not found much information on the initial reception of W. Nicol's polarizing prism in the years after its invention in 1828-29. W. F. Talbot (1834a), later a pioneer in photography, states that he did not hear of it until he read the 1833 German translation of Nicol's paper. He adds that a Mr. Watkins in London is by then quite skilled at making Nicol prisms. Similarly, J. Poggendorff in 1833 (see under Nicol 1829 in the list of references) and Dove (1835, p. 607) mention an instrument maker in Berlin "whose Nicol prisms are already in the hands of several scientists". In the late 1830's it was noted that the performance of the prism could be improved by widening its field of view, reducing the lateral shift of the transmitted ray, and increasing transmission through the glue layer and end faces. Nicol (1839) himself suggested some such improvements, also Sang (1837 and 1891), Spassky (1838) and Radicke (1840). The educational equipment suppliers Watkins & Hill (1838) in London advertise Nicol prisms and other apparatus from Iceland spar, quartz, tourmaline and glass related to double refraction and polarization. A part of their advertisement is shown in Fig. 14-1; they also issued catalogs.

In addition to the inclusion of Nicol prisms in various types of instruments to be described later in this compilation, they were used on their own in many experiments. As an example we may consider a simple but fundamental question contemplated e.g. by Airy (1831, p. 407-408): is the light-wave oscillation in a narrow monochromatic ray of light completely regular for a long time, or is the ray perhaps composed of short successive "strands" of light that are out of step (phase) with each other? This could be checked by splitting a ray in two and delaying one of these before they were brought together again to form an interference pattern. For that purpose, Fizeau and Foucault (1845, Fig. 13-2) invented a method employing thin plates of Iceland spar and quartz between two Nicol prisms, and a spectroscope. With this setup they showed in 1850 that the oscillations of the so-called F and G spectral lines in sunlight were continuous for at least some 7000 wavelengths. Stefan (1864b) used a similar method on the B and H lines, remarking that a better one was yet to be found. He doubled this lower limit for the H-line, but his equipment did not permit an estimate of any upper limit. Mascart (1872, p. 196) managed to demonstrate interference in beams of sodium light differing in phase by 105 thousand wavelengths "…in spite of the enormous crystal thicknesses (36 cm) required. This was because Iceland spar is perhaps the most homogeneous of all available transparent substances…"; he also states that its cleavage planes are

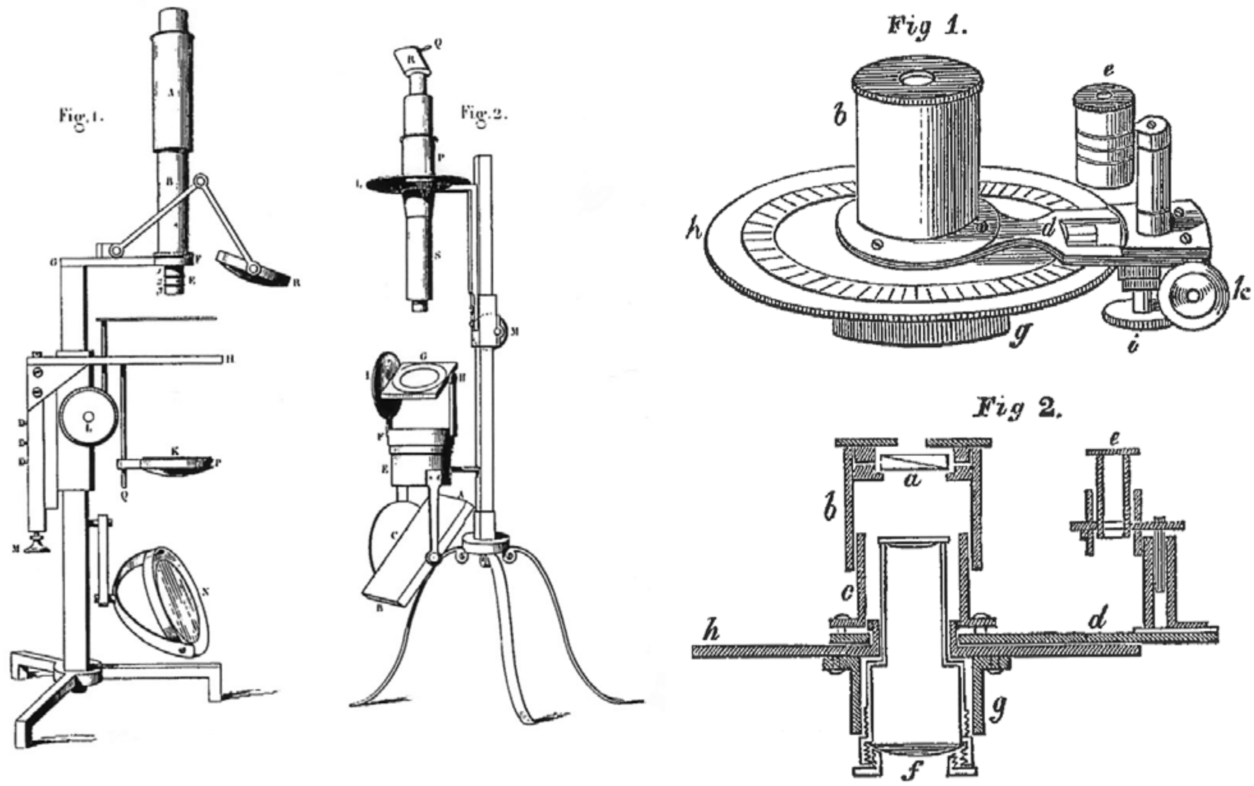

Figure 13-1. *Left:* Polarizing microscope (Fig. 1) and polariscope (Fig. 2) described by Amici (1844). R at the top of Fig. 2 is a rhomb of Iceland spar, two such rhombs are in the microscope but not shown. Both these instruments are among the first of their type for which contemporary drawings are available. *Right:* External appearance and cross-section of the instrument designed by Leeson (1845) for studies of refraction in crystals. The Rochon prism at the top is made from Iceland spar and glass.

more even than polished glass surfaces. Procedures not depending on polarized light were also used in related experiments, creating interference in beams with a path difference of two million wavelengths around 1900. However, some people had by then raised questions about instrumental effects on the light and about spectral analysis in general (see Winkelmann 1906, p. 1135-1137; Darrigol 2012, p. 280-286). The discussion of the finite length of light pulses took various turns later, especially after the application of quantum theory to atoms in the early 1900s. It may be mentioned that the above method of Fizeau and Foucault (1845) was adapted by others for various researches on spectra (Bernard 1864, Violle 1884), refractive indices (Mouton 1879, Dufet 1881), and optical activity (Broch 1846, Gernez 1864), both within and outside the visible range.

Brewster (1830a) points out that beautiful color effects will be seen if metallic salts are allowed to crystallize from solution under a microscope in polarized light. For this he recommends a glass-plate polarizer and a thin plate of agate or tourmaline as analyzer. The first one to equip a microscope with Nicol prisms was probably the above-mentioned Talbot (1834a, 1837) who describes various observations with this equipment. Polarizing prisms for microscopes were sold by Pritchard (1836); use of these as well as of tourmaline plates or spar rhombs is mentioned by Goring and Pritchard (1837, 1838). Powell & Lealand (1841; Turner 1989, p. 120-121) in London made a microscope with optional Nicol prisms. A new microscope by Ross (1843) also has polarizing and analyzing prisms among its accompanying apparatus, and so has one by Smith & Beck in 1848 (Turner 1989, p. 174-175).

Books and papers (Goring and Pritchard 1838, Pereira 1843, Quekett 1848, Legg 1849) appearing in London in this time interval described the advantages of using polarized light for observations on a variety of crystals and biological materials. Goring and Pritchard‘s book contains an update of the latter‘s 1836 advertisement, offering among other things polarization accessories and related preparations for microscopes as well as thin sections of various rocks. Polarized-light techniques seem to have been popular with amateurs who often were organized in clubs and who published magazines. In France, the optician Chevalier (1839; Mandl 1839) constructed a microscope with Nicol prisms for the geologist A. Brongniart. Lerebours (c. 1842, 1846) and Dujardin (1843) were also familiar with microscopes fitted with Nicol prisms and other polarizing arrangements.

Leeson (1845, Fig. 13-1) invented a device with an Iceland spar (or quartz) prism for measuring angles of crystals and some of their optical properties. This device seems to have been available as an option in at least some microscopes into the 20th century (Rosenbusch 1885, p. 17-18; Beck 1882, 1924, Groth 1905). Lima-de-Faria (1990) considers the first polarizing microscope to have been designed by Amici (1844, Fig. 1 in Fig. 13-1); it has a glass-mirror polarizer and an Iceland spar rhomb analyzer. A description and a drawing of this instrument may in fact be found in an earlier book by R. Gerbi: Corso Elementare di Fisica, vol. 3 p. 229-231, Pisa 1832. Brewster (1848a) pointed out that bothersome reflections in microscopes may be reduced by the use of polarized light, and Brücke (1848) used a microscope with two Nicol prisms in detailed work on colored rings in thin crystalline plates. Polarizing microscopes however did not become popular with geologists until around 1870; microscopes and related equipment will be discussed further in sections 18.2, 18.3 and later.

Many scientists continued using Iceland spar rhombs as polarizers (instead of Nicol or double image prisms) in various situations, for instance A. Becquerel (1849), Jamin (1850a), Billet (1858-59, I, p. 345; 1862), Cornu (1867, 1889), Kerr (1894), J. Becquerel (1910), Nichols and Howes (1916), and some of those studying the Zeeman effect (see chapter 30) after 1897.

According to a short note on p. 414 of Comptes Rendus vol. 8, the opticians J.B. and H. Soleil presented in 1839 an instrument for viewing and projecting crystalline interference figures. It is described e.g. in the books by Pouillet (1847, p. 413), Billet (1858-59), Christie (1864-65) and Verdet-Exner (1887, p. 130-131). Among opticians selling this popular instrument were Lerebours and Secretan (1853), Grunow (1856), and Lutz (1872). It consisted of three converging lenses, a glass-mirror polarizer, a tourmaline analyzer, and a micrometer for measuring the axial angle in biaxial crystals.

Polarized light was also used in investigations of how the human eye perceives light and colors (e.g. Brewster 1829b, Wartmann 1843, Dove 1847a, 1853, Foucault and Regnauld 1849, Maxwell 1856). A visual effect called “Haidinger’s brushes” generated much attention. These are figures resembling sheaves of grain that are seen (or appear in the eye) in plane-polarized light (Haidinger 1844 and later, Silbermann 1846, and many others). From then on, people used polarized light in various ways to study vision and its physiology, see section 29.7. As mentioned in section 7.3, D. Brewster had already entered that field long before.

13.2 Rapid development of polarimeters, 1840-50

When people began making fairly accurate measurements with polariscopes, they were increasingly often called polarimeters in Europe and later in the U.S., though not always in a consistent way. In the section on J.B. Biot in Dictionary of Scientific Biography (1980-90) and other sources, his improvements on older types of polariscopes around 1840 are said to have resulted in the first polarimeter (e.g., Biot 1840a, Fig. 13-5). They developed rapidly when Nicol prisms replaced other methods of polarizing and analyzing light. See publications on the use of these devices by Dove (1835), Babinet (1837), Biot (1840a, 1845a,b,d), Soubeiran and Capitaine (1840, many es-

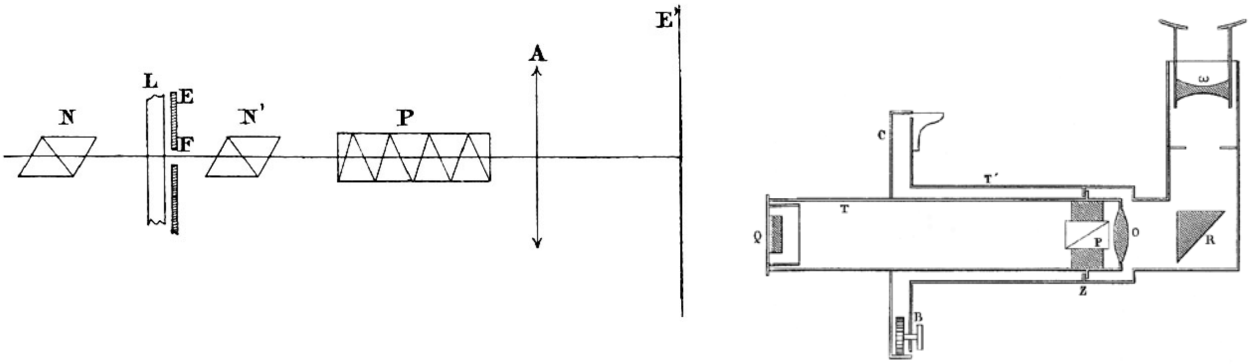

Figure 13-2. *Left:* Fizeau and Foucault (1845, 1847) showed that a so-called "channeled spectrum" with dark stripes appears on the screen E' due to interference between two components of polarized light emerging from the birefringent crystal plate L. P is a dispersing prism and A is a lens. Many others later employed similar techniques in optical research. *Right:* A simple instrument (horloge polaire, by J.B. Soleil) for finding the direction to the Sun from the polarization of skylight. The first description of such a device is due to Wheatstone (1848). The diagram is from Billet (1858-59).

sential oils), Brewster (1841) and Pereira (1843). They had three main fields of application, not always explained fully in the publications involved: (A) the measurement of the rotation of plane-polarized light in a sample; this type was called polaristrobometer by Wild (1865) and Landolt (1898). (B) The analysis of the principal parameters of elliptically polarized light, which might for instance be produced from plane-polarized light on reflection from a surface. The chief difference between these two lies in the provision of a phase compensator (section 13.5) in the latter type (Zehnder 1908a) which was later named ellipsometer. (C) Detection and measurement of plane-polarized light in the presence of unpolarized light. According to Verdet-Exner (1887, section 486) a new polariscope by Arago (Fig. 13-3) demonstrated to the French Academy in 1841 was of this type.

Ventzke (1842, 1843) improved Biot's polarimeter (in the A-category above). His instrument which is illustrated in his paper, contained two Nicol prisms. He, as well as for instance Wagenmann (1842) suggested and tested various uses for it in the sugar industry. The earliest practical polarimeter of this type, however, was constructed by E. Mitscherlich in connection with his research (Mitscherlich 1841, see D.S.B.) on fermentation and digestion. It also incorporated improvements on Biot's device, and its description appeared in Mitscherlich's (1844, p. 360-366) textbook of chemistry. Biot (1845c) immediately praised the virtues of this new model. A less known instrument for similar use is due to Leeson (1843-45) who investigated the optical activity of various essential oils from plants. Chevallier (1845) also advertised polarimeters for liquids.

Biot (1840b, 1845d) pointed out that polarimeters provided a rapid and simple method of measuring the concentration of sugar solutions. They would therefore be very suitable for quality control in the production, trade, and industrial consumption of sugar; see for instance Baudrimont (1841) and Soubeiran (1842). As an example, it was being debated in the 1840s whether a time-consuming and expensive filtering method in sugar factories could be replaced by a simpler chemical treatment. Polarimeter measurements aided in confirming that the latter was not detrimental to the output of refined sugar (Dingler's Polytechnisches Journal 113, 393-397 and 114, 158-159, 1849). However, it was soon found that in the fluids being processed at various stages in the beet-sugar industry, there are other optically active compounds which can distort the interpretation of results. Biot (e.g., 1843a) therefore made an extensive series of experiments where he measured the activity of sugar solutions before and after treatment with acids. This treatment affects the specific rotatory power of sucrose considerably in a known way, but does not significantly change the activity of monosaccharides which may be present. Clerget (1846a,b, 1849, Fig. 13-4) continued Biot's work, eventually presenting precise recipes for reliable measurement of the sucrose content

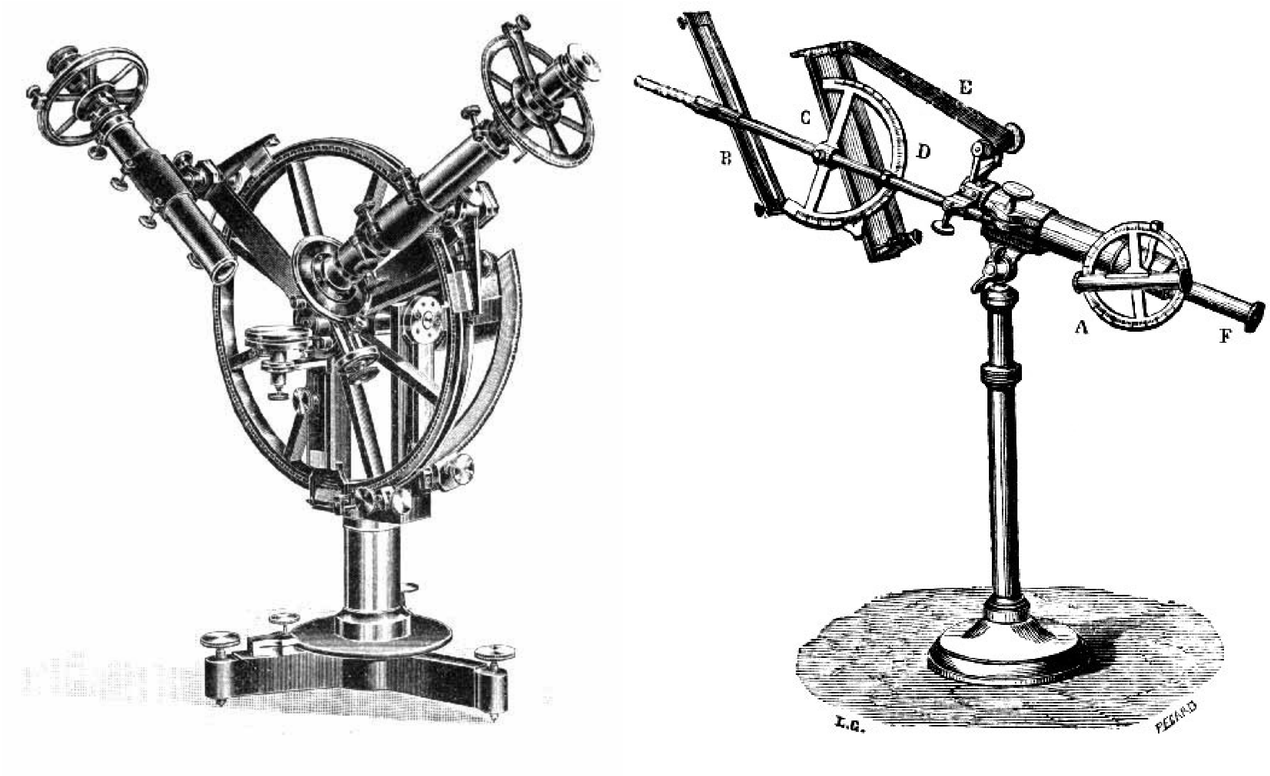

Figure 13-3. *Left:* Jamin´s (1850a) circle equipped with Iceland spar prisms and quartz wedges, for analysing elliptically polarized light. The figure is from a Société Genevoise catalog issued in 1900. *Right:* F. Arago's polariscope for observing polarization of skylight, described in 1841. From the catalog of J. Duboscq (1885).

in any sugar-factory liquids. Modified versions of some of these recipes were in use into the 20th century (Rolfe 1905, Saillard 1913), even until the 1940s (Jackson and Gillis 1920, Hinton 1930, Bates et al. 1942, p. 126-132).

Soleil (1846) demonstrated a new saccharimeter to the Société d'Encouragement pour l'Industrie Nationale and received a gold medal from this Society in the following year, when he also introduced some improvements in its construction (cf. Becquerel 1847). See section 13.5. Other makers soon entered the market (e.g., Deleuil 1848, Lerebours 1850) and descriptions of polarimetry appeared in additional textbooks of chemistry such as by Pelouze and Fremy (1850). Further improvements in these meters were made by Duboscq and Soleil (1850, Fig. 13-5). More on developments in polarimetry will appear in section 18.1, including types for use especially in the sugar industry. A thesis by Ward (1980) deals with various aspects of the 19th century history of polarimetry.

Dubrunfaut (1847) argued on the basis of polarimetric measurements, that a type of sugar which he called malt-glucose and later maltose, was produced in the fermentation of starch. This discovery went unheeded for a long while, see section 22.2. Dubrunfaut (1849) subsequently found by detailed research, that the "inversion" of optical activity of sucrose brought about by acids or fermentation, is due to the splitting of the dextro-rotatory sucrose molecule, with addition of one molecule of water. Its constituent parts are glucose (often called dextrose) and fructose (also called levulose) with stronger specific rotation. This result was a major step in the understanding of the nature of sugar compounds. Previous ideas, for instance about hydrolysis and the relations between glucose and sucrose (Turner and Gregory 1846, p. 632-635) were somewhat confused. Dubrunfaut himself investigated natural processes modifying the composition of sugars in honey and in raisins, with the aid of polarimetry and other methods. More on his achievements in sections 18.1 and 27.7.

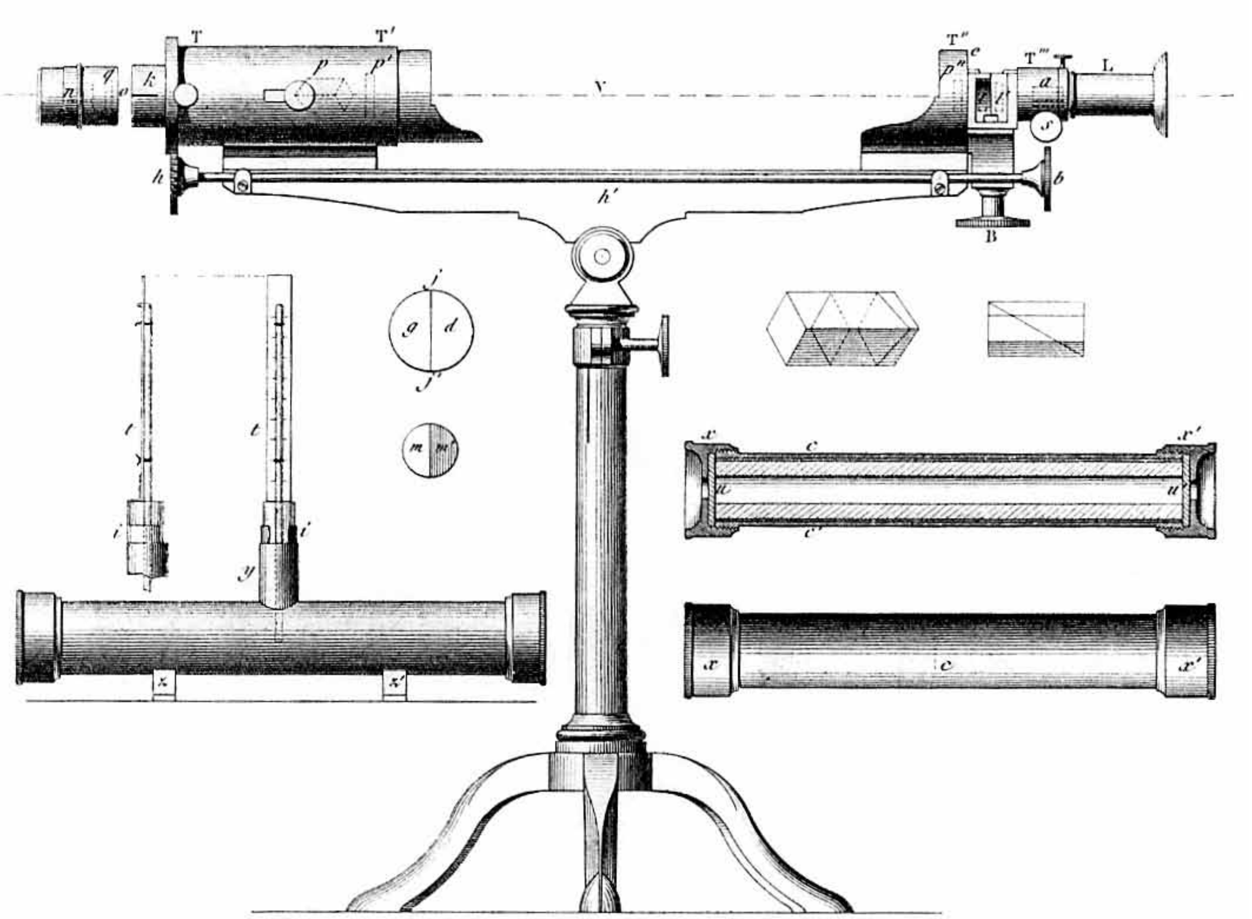

Figure 13-4. Part of an illustration in Clerget (1849) showing his Soleil-made polarimeter for measurements on sugar solutions. Components visible here are the Nicol prisms p and a, quartz wedges, a sample tube, and a thermometer. A light source is to the left.

It had been known since 1815 that the sugar excreted in urine of diabetic patients is glucose. Biot (1840c, 1845a, 1848) proposed the use of polarimeters for rapid measurements of its concentration in the diagnosis and treatment of this condition. A. Bouchardat (1841), who had been studying diabetes, made such measurements with Biot's instrument. He (Bouchardat 1842) confirmed Biot's conclusion that albumin and other proteins which occur widely in organisms, are optically active. Bouchardat (1844) and Wilhelmy (1850) also noted the presence of optical activity in various so-called glycosides, a class of chemicals including for instance salicin which was known to reduce fever and inflammation. Bouchardat and Sandras (1845) showed that a diastase (i.e. an enzyme, later called β-amylase) similar to the compound from the plant kingdom mentioned in section 12.4, is produced in the digestive system of animals. It is likely that this finding was to some extent based on polarimetric measurements. Pasteur (1851) found that two amino acids occurring in asparagus were optically active; they were soon also shown to be among the active materials that (as mentioned earlier in this section) are present in sugar beet.

After 1820, many optical phenomena in the environment were observed through polarimeters. The light from the clear sky, which is polarized to a variable extent depending on direction relative to the observer and the Sun, was studied by Arago as mentioned above, Babinet (1840), Brewster (1842) and later Bernard (1854, 1856) and many others. Wheatstone (1848, Soleil 1849) designed an instrument with a glass reflector, a gypsum plate and Nicol prism which he called a "polar clock". With this instrument, the direction to the Sun could be found if it was hidden but the sky was at least partly clear. It was later improved by others (Fig. 13-2, see also Spottiswoode 1874b) and sold for instance by Duboscq (1885). I have not come across any accounts of its application in practice. A century after Wheatstone's invention, a similar instrument was built at the U.S. Bureau

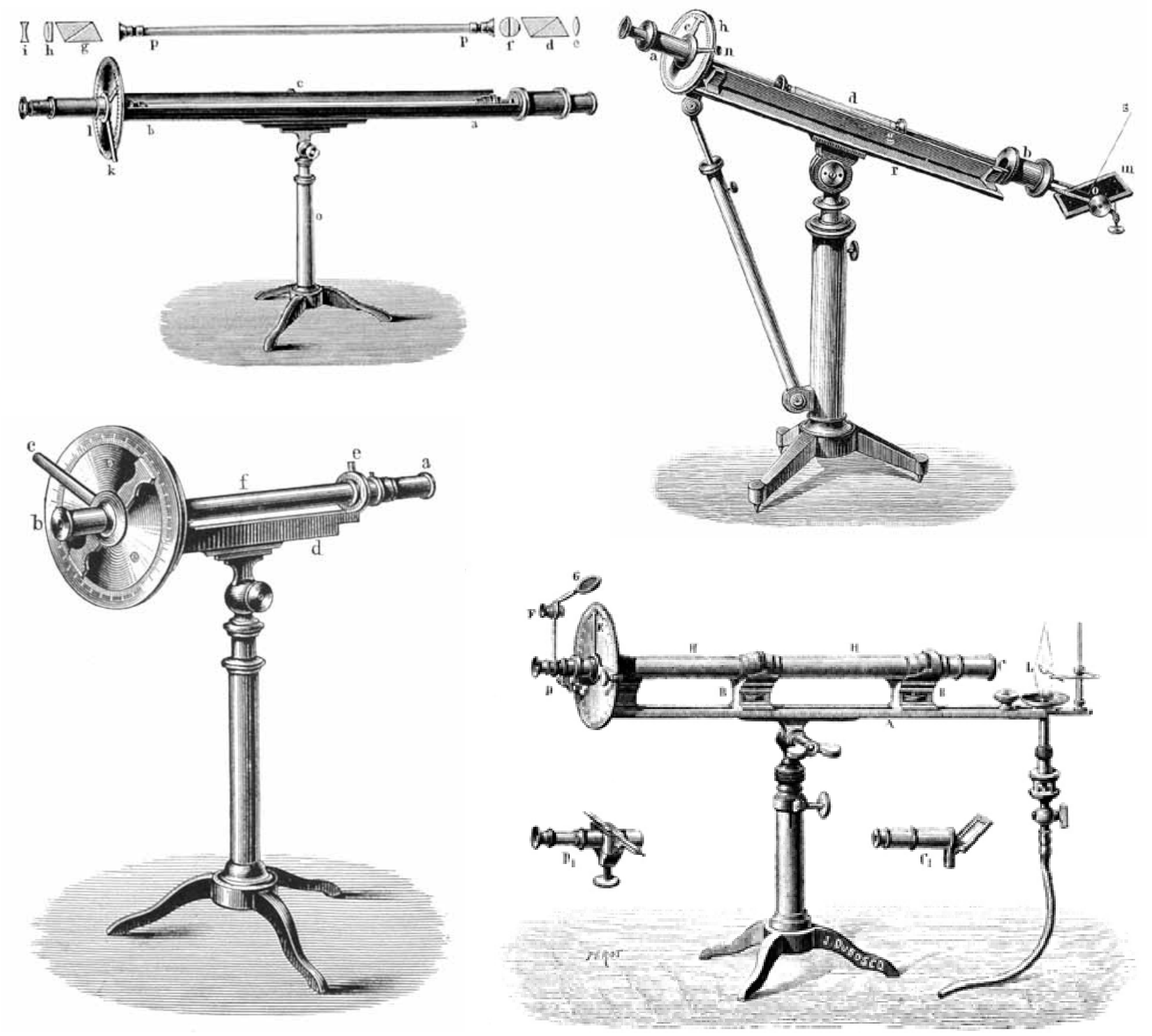

Figure 13-5. Some of the first generation of polarimeters in common use. *Top left*: The polarimeter of Robiquet (1856), containing two Nicol prisms and a double quartz plate f. From Landolt (1898). *Right*: A picture from Lummer (1909) of Biot's (1840a) polarimeter with a glass-mirror polarizer and an Iceland spar prism. d is a sample tube. *Bottom left*: Biot´s polarimeter as improved by E. Mitscherlich (1844), with two Nicol prisms. From Landolt (1898). *Right*: A polarimeter produced by the Soleil workshop from 1846. The picture is from a Duboscq catalog.

of Standards for use in aircraft on polar routes (Rev. Sci. Instr. 20, 1949, p. 460). From around 1968, a discussion has been going on regarding the nature of a "sunstone" mentioned in a couple of old Nordic texts. Claims that such a device may have been used as a navigational aid on long voyages across the North Atlantic many centuries ago, remain very speculative.

Scientists also investigated the polarization of the light from the aurora borealis, rainbows, halos around the Sun, comets, planets, the zodiacal light, the Sun's corona at eclipses, etc. These measurements were mostly qualitative, of the type C above. Some of these luminous phenomena are complex and not easy to interpret in terms of existing knowledge of that period. Their spectra were also not analyzed until around 1860.

The state of polarization of light reflected from surfaces of various materials was studied thoroughly, e.g. by Senarmont (1840), Powell (1843), Jamin (1845, 1847, 1850a), and Dove (1847b), using method B above. In particular, an instrument dedicated to this purpose was constructed by the Soleil workshop for Jamin (1850a; Fig. 13-3, cf. Pellin 1889, p. 133-134). Measurements by

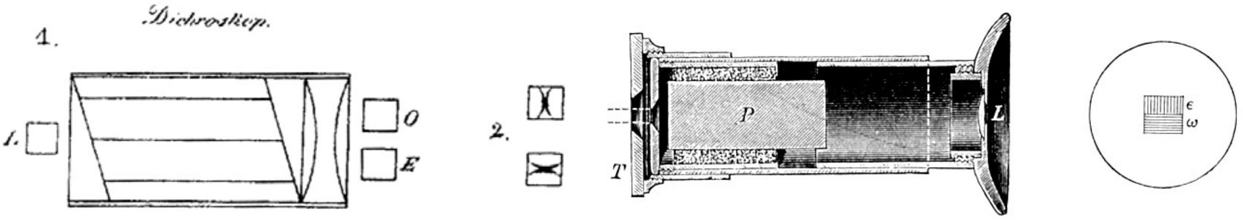

Figure 13-6. *Left:* Cross-section of Haidinger's (1845) dichroscope. *Right:* A dichroscope from the Fuess workshop (Johannsen 1914). P is a calcite rhomb, L is a lens. A piece of an unknown crystal is brought to a hole in the plate T on the left-hand side of the dichroscope, while the observer is looking at a light source through it. He then sees two images of the hole, often in different colors. Various manufacturers produced dichroscopes, and they are still in use for rapid inspection of gemstones.

these experimenters on metallic reflection, a topic which had been studied previously by Brewster (1830b) and Neumann (1832b), were said (Lloyd 1857, p. 156, Partington 1953) to agree reasonably with the theories of Cauchy. Cauchy as well as J. MacCullagh had in the late 1830s introduced complex terms into the refractive indices of metals and other opaque materials (Whittaker 1951, p. 161-164); this practice was continued (e.g. by Drude 1887) and turned out to be physically justified.

13.3 Quarter-wave plates

In addition to Nicol prisms, scientists employed a variety of thin plates and wedges from doubly refracting materials in research involving polarized light. Some of these aided in the analysis of the polarization state of light, others changed that state from for instance circular to linear polarization if needed. Some were made from Iceland spar, others from quartz, clear gypsum (selenite), or muscovite mica. See section 13.5 for more on certain applications of such devices.

One of the simplest tools of this kind is the so-called quarter-wave plate, often attributed to Airy (1833a) although for instance Mason (1982) considers A. Fresnel to have invented it earlier. It is usually made from quartz or mica (Senarmont 1840); calcite is too difficult to polish to the right thickness. The optical axis is in the plane of the plate. In a light beam passing through the plate, the phase of one vibration component (parallel or perpendicular to the optical axis) will be delayed by 90° relative to the other one. By rotating the plate or the polarizing prism, the phase difference can be varied. See e.g. Fig. 29-4. This is just like in Fresnel's glass rhomb of section 8.1, and both have been used extensively. The plate takes up less space than the prism, but its delay angle is much more wavelength-dependent which can be a disadvantage. In a simple instrument designed around 1850 by Wheatstone (1871) the quarter-wave plate was replaced by reflection from a silvered mirror at a particular angle of incidence, but this technique does not seem to have been much in use.

13.4 Dichroscopes

Small devices called dichroscopes were invented by Brewster (1815b) for the demonstration of complementary colors produced in light by crystalline plates. See the 1838 advertisement in Fig. 14-1. Haidinger (1844, 1845) applied them in the study of colored crystals, especially dichroic ones which absorb the ordinary and extraordinary rays differently. White light is passed first through the specimen, then a small rectangular hole, a calcite rhomb or an achromatized spar

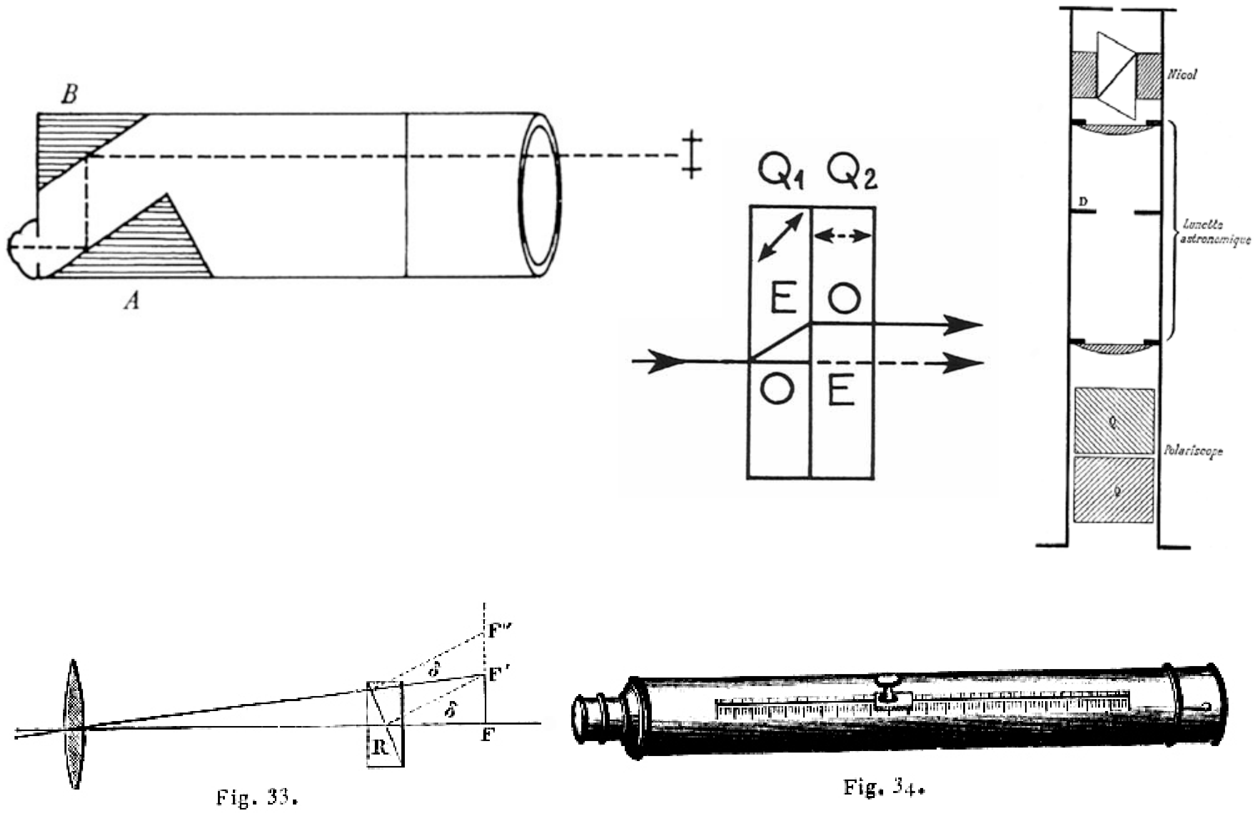

Figure 13-7. *Top left:* A tube with glass mirrors for observations on the polarization of light, made by the schoolboy J.C. Maxwell in 1848. The diagram is taken from one of the volumes of his collected works. *Top center:* Savart's (1840) plate, which is made from two specially cut plates of quartz or Iceland spar. It has been used in many instruments for investigating polarization of light. The small arrows indicate optical axes. Diagram from Françon (1963). *Right:* The telescope (Bouasse 1925) is an example of the use of Savart´s plate to detect a polarized component mixed with ordinary light. *Bottom:* A telemeter with a Rochon prism (probably of quartz), for measuring small angles or estimating distances to objects of known size. From Pellin's (1899) catalog.

prism, and a lens (Fig. 13-6). The observer sees two images of the hole side by side, varying in color if the specimen is rotated. The human eye can more easily distinguish differences in their colors than the attributes of a single ray. Powell (1842) had shortly before this used a similar technique in a polariscope, which made it simpler to use than Biot's original version. Various versions of dichroscopes appeared in the following decades, such as that by Dove (1860) which was also useful in teaching about colors (Rood 1881). Comparison methods of this kind later became a standard in polarimeters and photometers, cf. the next section. Dichroscopes are still in use by mineral collectors to recognize specimens and by jewellers in appraising gemstones.

13.5 Phase compensators and other analyzing devices

In many optical experiments on matter where linearly polarized light becomes elliptically polarized (Fig. 7-1), the observer needs to find the shape of the ellipse. One parameter determining this shape is the phase difference between x- and y- oscillations of the light. Thin plates which can be applied to change this phase difference continuously or in steps to convert the light back to linear polarization, are generally called compensators. They have mostly been made from quartz, and are employed in conjunction with Nicol prisms. The first compensator was suggested by J. Babinet before or around 1840, but its operation was described by Jamin (1850a). It is made from two thin calibrated quartz wedges that are moved against each other (see Fig. 22-1) until the observer can extinguish the light with his analyzing Nicol prism. J.B. Soleil (1845) described a similar type of compensator containing an additional quartz plate. This makes the measurements more convenient and more accurate, but it is more difficult to construct than the Babinet device. Both are still being produced. Compensators reaching to several wavelengths were introduced later in polarizing microscopes for transmitted light, in order to measure differences between the refractive indices of a crystal specimen.

Somewhat analogous methods were also made use of in the early polarimeters, as described for instance in the papers of Clerget (1846a, 1849, Fig. 13-4) on his comprehensive methodology for sugar analysis by polarimetry. Here, the accuracy of rotation readings in a new instrument by J.B. Soleil is improved by the introduction of a split rotatory compensator from quartz. Robiquet (1856, see Fig. 13-5) similarly increased the accuracy of Mitscherlich's (1844) polarimeter by adding Soleil's bi-quartz plate into the light path. Then the observer's circular field of view is divided into two halves of different tints, one becoming more bluish and the other more reddish on adjustment. A reading is taken when both were of the same color, called the "sensitive tint" (teinte sensible). Colored liquids such as urine could also be measured with the aid of a compensating quartz plate (Soleil 1847, Lespiau 1848) Many variations on this technique were soon developed, and such half-shade instruments (polarimètre à penombre, Fig. 18-1) became dominant in polarimetry from the 1870's until the advent of photo-electric sensors in the 20th century. See Landolt (1898), Pellin (1903) and Bates et al. (1942) on these historical aspects.

The so-called Savart's plate is composed of two calcite or quartz plates, cut in a particular way relative to their optical axis. Early descriptions of this plate are found in a paper by Delezenne (1834) and in a short footnote (Savart 1840; Fig. 13-7). By viewing a source of light through a Savart plate between two Nicol prisms (or thin tourmaline plates), it could be ascertained whether this light contained a plane-polarized component, even if it only amounted to 1% of the total light intensity (cf. Wood 1905a, Wright 1919b). Delezenne (1834; Billet 1858, p. 507) also described an alternative device for a similar purpose containing two thin plates of Iceland spar or quartz; his inventions turn up here and there in 19th century textbooks and educational equipment catalogs. The application of Savart's plate in some optical instruments will be described in later sections.

14 Speculations regarding Iceland spar exports to 1850

It is clear that a great number of Iceland spar crystals was required for research and education purposes before 1850 (see e.g. Fig. 14-1), and that most of these came from Iceland. The demand for Nicol prisms must for instance have increased rapidly after 1840 particularly for use in polarimeters, but evidence regarding the commercial production of both the prisms and the polarimeters remains to be explored. It would also be very interesting if records of Iceland spar exports could be found in any surviving documentation on the operations of the trading post at Stóra-Breidavík. It was situated only 2 km from the site at Helgustadir, and it is likely that much of the exported material passed through Stóra-Breidavík on its way to Copenhagen. G.A. Kyhn was appointed as merchant of that post from 1781, and he purchased it after the monopoly trade was liberalized in 1786-88. However, new entrepreneurs soon began trading at the Eskifjördur settlement about 10 km away from the calcite locality in the other direction (see vol. 5 of the book "Eskja" by Einar Bragi, 1986). They included in 1798 N. Ørum and J.A. Wulff, both of whom had been previously employed by Kyhn. His economic situation at the Stóra-Breidavík post was by then deteriorating, and the site was abandoned as such around 1806.

It is quite possible that sailors on the many foreign fishing boats that came here every year, did pick or buy crystals while lying in Reydarfjördur, in order to sell them at home to collectors and scientists. This might even to a greater degree apply to the larger vessels accompanying these fleets, such as transport ships (cf. memoirs of J. Ólafsson, which appeared in the periodical Idunn 1915-16) and military vessels. The number of French boats in Icelandic waters in 1765-92 and 1815-50 averaged over 50, according to E. Pálmadóttir's book "Fransí biskví", published in 1989. This speculation is supported by the existence of a French nautical map no. 1480 from 1855 of a part of the Reydarfjördur coast (printed with another map of the anchorage at Eskifjördur, in scale approx. 1:12,000): its title is "Crocquis des Mouillages du Spath et de Svartas Kiær", i.e. sketch of the anchorages at the Iceland spar site and the Black Skerry.

A number of Iceland spar samples acquired by Danish traders and travellers probably found their way to scientists and mineral collectors in Germany. A list of over nine thousand natural objects owned by P. Pasquay (1777) of Frankfurt includes several pieces of spar, one being 3½" in size. I have not checked on the extent of other 18th century European fishing or trading activities around the coasts of Iceland which might have involved exporting of minerals. However, it may be mentioned that a catalog of objects for sale from a large Dutch cabinet of curiosities (Posthumus 1766) contains some Icelandic ones such as "Verdubbelende Yslandse Crystallen en andere fraye Spaathen" and zeolites.

The foreign travellers who passed the Helgustadir site may also have collected crystals there. Among scientists known to have visited there are F.A. Thienemann in 1820-21 and Jónas Hallgrímsson in 1842, see Fig. 37-2. Other scientists may have established contacts in Iceland for acquiring Iceland spar, such as G.S. Mackenzie who travelled in this country in 1810. For instance,

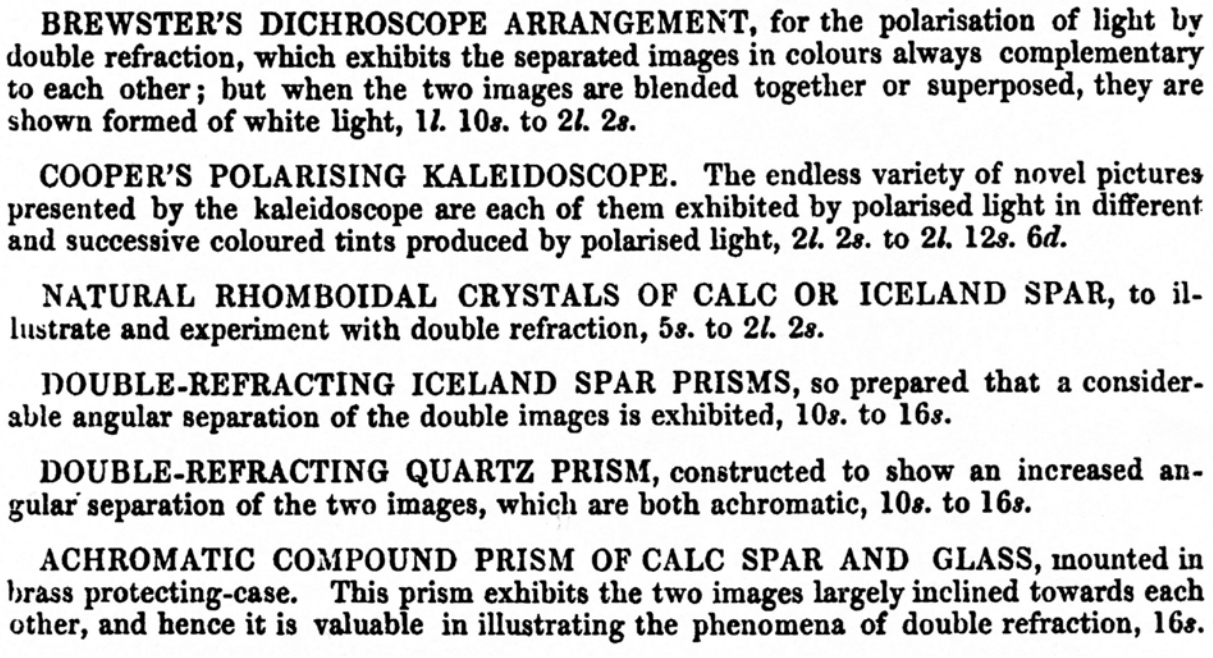

BREWSTER'S DICHROSCOPE ARRANGEMENT, for the polarisation of light by double refraction, which exhibits the separated images in colours always complementary to each other; but when the two images are blended together or superposed, they are shown formed of white light, 1*l.* 10*s.* to 2*l.* 2*s.*

COOPER'S POLARISING KALEIDOSCOPE. The endless variety of novel pictures presented by the kaleidoscope are each of them exhibited by polarised light in different and successive coloured tints produced by polarised light, 2*l.* 2*s.* to 2*l.* 12*s.* 6*d.*

NATURAL RHOMBOIDAL CRYSTALS OF CALC OR ICELAND SPAR, to illustrate and experiment with double refraction, 5*s.* to 2*l.* 2*s.*

DOUBLE-REFRACTING ICELAND SPAR PRISMS, so prepared that a considerable angular separation of the double images is exhibited, 10*s.* to 16*s.*

DOUBLE-REFRACTING QUARTZ PRISM, constructed to show an increased angular separation of the two images, which are both achromatic, 10*s.* to 16*s.*

ACHROMATIC COMPOUND PRISM OF CALC SPAR AND GLASS, mounted in brass protecting-case. This prism exhibits the two images largely inclined towards each other, and hence it is valuable in illustrating the phenomena of double refraction, 16*s.*

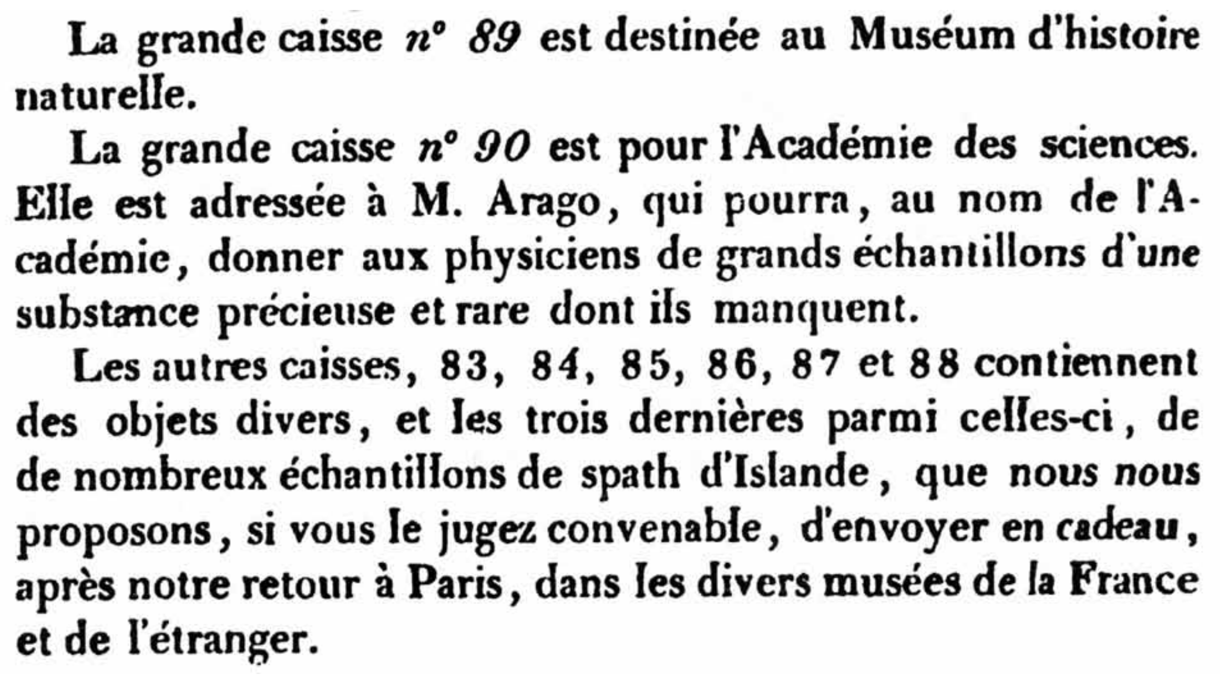

La grande caisse *nº 89* est destinée au Muséum d'histoire naturelle.

La grande caisse *nº 90* est pour l'Académie des sciences. Elle est adressée à M. Arago, qui pourra, au nom de l'Académie, donner aux physiciens de grands échantillons d'*une* substance précieuse et rare dont ils manquent.

Les autres caisses, 83, 84, 85, 86, 87 et 88 contiennent des objets divers, et les trois dernières parmi celles-ci, de de nombreux échantillons de spath d'Islande, que nous *nous* proposons, si vous le jugez convenable, d'envoyer en cadeau, après notre retour à Paris, dans les divers musées de la France et de l'étranger.

Fig. 14-1. Our knowledge about the exports of Iceland spar crystals from Helgustadir is very limited. Contemporary documentation exists on some collection efforts (e.g. from Gaimard 1836b, *bottom*). On the other hand, mystery prevails on how opticians in Europe acquired quantities of crystals to sell (*top*, from Watkins & Hill 1838) or to incorporate into optical instruments, before commercial exploitation of the deposit started (in 1850 according to Th. Thoroddsen).

D. Brewster (1815b) mentions that he obtained some Iceland spar crystals from Mackenzie. In a letter to H.C. Ørsted in 1825 (printed in Ørsted's collection of letters, published in 1920) Brewster states that two men recently went from Edinburgh to Iceland, and in the following year it is noted in the Edinburgh New Philosophical Journal (vol. 1, p. 179) that spar from Iceland collected by Mr. Rose and Mr. Brown had been exhibited at a meeting of the Wernerian Natural History Society in Edinburgh. The latter gentleman also brought a mineral specimen from Iceland which Brewster described in an article and gave the name oxahverit. In a letter to Ørsted in 1826, Brewster thanks him for a parcel from Count Vargas Bedemar, who was curator of a large mineral collection belonging to the Crown Prince of Denmark and had written papers about Icelandic minerals. A letter from A. Fresnel in 1825 reveals that Ørsted himself appears to have procured some Iceland spar for him, and Melloni (1836, 1837) acknowledges that a 92-mm piece used in his experiments also came from Ørsted.

A notable direct source of information about a crystal-collection effort at Helgustadir may be found in letters from P. Gaimard on behalf of his expedition on the vessel "La Recherche". In one (Gaimard 1836a) it is stated that they sent to France a large trunk (caisse) of this "precious substance", much in demand by French and foreign scientists. Another letter (Gaimard 1836b, Fig. 14-1) additionally mentions a large trunk destined for the Muséum d'histoire naturelle as well as three trunks with specimens of spar and other minerals intended for distribution to other museums in France and abroad. However, in the published expedition reports (Robert 2007) it appears that its members were quite disappointed by the Helgustadir locality. Dumas (1842) used Iceland spar crystals from E. Robert in his chemical analyses (see chapter 25); these probably were recovered in the 1836 expedition.

In one of his papers in early 1845, J.B. Biot noted that opticians had insufficient stocks of Iceland spar to meet increasing demand for use in constructing the polarimeters he was championing. Soon after, he mentions that a supply may be on its way: this was clearly because he had arranged for the authorities to send a young scientist, A. Des Cloizeaux to the Iceland spar deposit. Des Cloizeaux (1846-47), who had in fact an illustrious career in mineralogy ahead of him, visited the site again in the following year. He took a quantity of crystals home with him on both occasions (see e.g. Senarmont 1845).

15 More on anisotropy and double refraction, from 1845

15.1 Anisotropic magnetization, 1845-55

Michael Faraday, who was active in research from about 1815 to 1860, was one of Britain’s most productive scientists in the 19th century. His interests to begin with were mostly in the field of chemistry, where he made many discoveries, but his greatest work is the series of articles “Experimental Researches in Electricity”. He discovered electromagnetic induction in 1831, and among other things he had a large electromagnet in his laboratory. With this magnet (shown in Tyndall 1870b, frontispiece), he discovered diamagnetism and paramagnetism (see section 16.1) and investigated these phenomena thoroughly in 1845-49. In an inhomogeneous magnetic field, an object made from a diamagnetic material experiences a weak force pushing it out of the field. Elongated objects suspended in a homogeneous magnetic field experience a torque tending to align them at right angles to the field.

Faraday‘s researches regarding magnetic fields generated much discussion and thinking about the nature of matter. Many others invested in electromagnets for experimentation, discussing their results with Faraday. One of these was J. Plücker, who investigated the forces exerted by magnetic fields on various crystals, including Iceland spar. He was surprised to find (Plücker 1847) that the spar and other diamagnetic crystalline materials were reluctant to behave according to Faraday’s principles. His main conclusion was: “When one puts a uniaxial crystal between the poles of a magnet, the optical axis is repelled by both of the poles”. In modern terms, this means that a torque tends to turn the axis into a direction at right angles to the field. If a crystal specimen is not very elongated in a direction perpendicular to the optical axis, this torque may dominate the torque caused by its shape. Plücker checked his results specifically with calcite, concluding (Plücker and Beer 1850) that “Iceland spar shows a very definite axial effect”.

Faraday had himself been studying this odd behavior, for instance in bismuth which shows the greatest diamagnetic effect (per mass) of all materials, and he called it “magne-crystalline action” (Faraday 1849). J. Tyndall (1894) who worked with Faraday in his experiments and became his successor, says in his biographical notes on Faraday: ”An eminent example of magne-crystalline action adduced by Plücker, and experimented on by Faraday, was Iceland spar”. In a discussion of Plücker’s and his own results, Faraday writes in 1848 (Proc. Royal Soc. 5, p. 783): ”How rapidly the knowledge of molecular forces grows upon us, and how strikingly every investigation tends to develop more and more their importance and their extreme attraction as an object of study ! A few years ago magnetism was an occult power affecting only a few bodies; now it is found to influence all bodies, and to possess the most intimate relations with electricity, heat, chemical action, light, crystallization, and through it, the forces concerned in cohesion.”.

Around 1848, Tyndall went to Germany and continued magnetic measurements on crystals for three years, first with H. Knoblauch in Marburg (e.g. Tyndall and Knoblauch 1850) and then in Berlin. They questioned some generalizations by Plücker regarding for instance correlations between magnetic and optical properties of crystals. Plücker and Beer (1850) responded by reporting and interpreting observations on a large number of uniaxial and biaxial crystals. Disputes between these parties which continued at least to 1856 are rather confusing and will not be quoted in detail here; see e.g. Chapter 5 of Liebisch's (1891) book and Bragg (1927). Variable results from the (mostly qualitative) studies by both may to some extent have been caused by the presence of paramagnetic or ferromagnetic impurities, whose reactions to magnetic fields can easily mask the weak torques acting on the bulk substance of diamagnetic crystals.

Faraday had in 1838 also attempted to measure whether cubes of Iceland spar where the optical axis was parallel to one of the three sets of edges, had different susceptibilities for electric fields directed along these. His results were not conclusive. W. Thomson who had previously written various papers on mechanics, electricity and thermodynamics, began contemplating how materials respond to electric and magnetic fields, after he heard of Faraday's discovery (section 16.1) regarding the effects of magnetic fields on light (Thomson 1847). One of the resulting publications (Thomson 1851) included theoretical equations describing the anisotropic magnetic properties of crystals. This work was based on a draft theory proposed by S.D. Poisson around 1824. Here, Thomson suggests experiments to test the theoretical predictions, by measuring forces and torques acting on spheres from calcite and other materials in magnetic fields. Maxwell (1858, read in 1855-56) also derived an expression for the magnetic torque on a crystalline sphere. Tyndall (1851, Fig. 11-1, 1855, 1856) and Faraday (1856) accordingly made magnetic measurements on spheres, cubes and cylinders from Iceland spar, bismuth and other anisotropic substances such as wood. See Tyndall's (1870b) book containing his papers and other documentation on this subject. Tutton (1922, p. 1402) states that measurements carried out with spheres of calcite agreed perfectly with Thomson's theory. Here Tutton may to some extent be referring to later studies (sections 15.2 and 28.3) which also substantiated Tyndall's (1851) estimate of a ~10% difference between the axial and transverse magnetic susceptibilities of calcite.

15.2 Theories on the behavior of crystals in fields – general importance

In physics the term "field" means that to any point of space you can tie a value of some defined quantity with its associated units of measurement. This quantity can often be represented by a single number, for instance when it represents density or temperature. These are called scalar fields. However, there are also many vector fields where the quantity has both a magnitude and a direction, such as the velocity of a fluid, an electrical field, or a flow of heat. The relevant mathematical formulas, which apply to a variety of physical situations, were developed in the decades around 1800 by C.F. Gauss, P.S. de Laplace, S.D. Poisson, J.J. Fourier and others. In materials, one field often causes another one. Thus, the spatial gradient of an inhomogeneous steady-state distribution of temperatures is a vector field, whose direction at any point in a homogeneous isotropic body is everywhere at right angles to the isothermal surface containing that point. In this simple case, a resulting vector field of heat flow (in watts/sq.m.) is always parallel to the causative thermal-gradient field. Their ratio, the thermal conductivity of the material, is a constant and is not dependent on direction.

Judging by some relevant papers from the mid-nineteenth century that I have read, it seems likely that interest in the geometrical and physical properties of Iceland spar and other crystals promoted the development of some important areas within physical science. These areas were among other things connected with wave motion in solids, concepts like moments of inertia, and novel ideas in mathematics (quadratic forms, matrices). This needs to be further looked into.

Around 1850 it was becoming apparent that in crystals (other than those of the cubical system), material coefficients depended on the direction relative to the crystal axes. Thus Senarmont (1847b) showed that this applied to thermal conductivity. He applied heat to a circular spot on wax-coated plates of Iceland spar, quartz and gypsum, and observed that the area of melted wax around that spot was not circular but had an oval shape aligned with the axes. Experiments with many other crystals (Senarmont 1848) also showed this effect, except in those from the cubical system. His results prompted Duhamel (1848, see chapter 11) and Stokes (1851b) to write notable theoretical papers about crystalline thermal conduction in general. Ångström (1850, 1853) made rather sketchy studies of directional dependence in various physical properties of gypsum and in the polarization of thermal radiation from surfaces of heated crystals, suggesting correlations of his results and other evidence with anisotropic molecular vibrations. Lamé (1861) and C. Neumann (1864) later presented advanced theoretical treatment of heat conduction in crystals, including biaxial ones.

The microscopic version of Ohm's law is a good example of one vector field causing another. It says that an electrical field at a point in an isotropic material gives rise to a current density at that point, the constant ratio between these being the electrical conductivity of the material. Observations on the electrical conduction of various minerals (Senarmont 1849) and bismuth (Matteucci 1856) as well as on what is now known as their electrical susceptibility (Wiedemann 1849, Knoblauch 1851, both including Doppelspath) however showed that these properties were direction-dependent.

The same applied to the hardness of Iceland spar and other crystals (Franz 1850; see results from later work in Fig. 28-1). Grailich and Pekárek (1854) constructed an instrument which they called a sklerometer, using it to carry out detailed hardness measurements on for instance surfaces of "several pieces of the Icelandic spar". The hardness could even vary with the direction by a factor of three, which was considered quite remarkable cf. a description of their experiments in E. Mallard's book on crystallography published three decades later.

The preceding section mentioned W. Thomson's (1851) theory on the anisotropic behavior of magnetism in crystals, and its confirmation by experiment. The entry on J.C. Maxwell in Dictionary of Scientific Biography (1980-90) refers to his lengthy correspondence with Thomson on these matters. Maxwell then put forward in 1856 some ideas about two different magnetic vectors H and B in materials, where B is caused by H in the same way as a pressure gradient causes fluid flow in a porous material, or a temperature gradient causes flow of heat. This very much strengthened the foundations of Thomson's theories regarding Faraday's magne-crystalline action. Liebisch (1891, p. 119-120) claims that Thomson and Maxwell were the prime discoverers of the close mathematical analogies between the various vector fields in crystal physics. Other sources also consider Maxwell's writings to have opened the eyes of many physicists to the importance of vector fields. See chapter 20 below; it might be interesting to trace that story in more detail.

15.3 More on the effects of pressure on optical properties of materials, to 1880

While J.C. Maxwell was still a schoolboy in Edinburgh in 1847, his uncle took him to meet W. Nicol who showed him his composite Iceland spar prisms (section 12.2), see Dictionary of Scientific Biography (1980-90). Nicol later gave him a pair of such prisms. Maxwell constructed a viewer with glass mirrors (Fig. 13-7) and made with it some remarkable experiments concerning double refraction caused by pressure and shear in a gelatinous substance of various geometries. In a paper by Maxwell (1853) on these observations, his theoretical interpretation was an improvement upon that of Neumann (1843) quoted in chapter 11 above. Maxwell showed that the double refraction arising in a deformed isotropic material was proportional to the difference of two components of the stress in the material, rather than to its deformation (strain). Maxwell's biographers point out that here he acquired valuable experience of material physics, and also of polarized light cf. his 1856 paper mentioned in section 13.2. More on him later, but in the next several years his research interests were in other fields such as mathematics and thermodynamics.

Most notable experimental studies on double refraction in transparent isotropic materials were carried out by Wertheim (1851, 1854) on test objects from several types of glass and cubic crystals. Using a Nicol prism and an Iceland spar rhomb, he showed that the optical effects of uniform compression and dilatation are of equal magnitude and approximately proportional to the load on the material. He reported that these effects were independent of the wavelength of the light. No major steps forward in this field occurred in the next quarter-century, but Bravais (1855), Kundt (1864), Mach (1873) made contributions to it. Verdet-Exner (1887, Ch. XXIX) reviews these as well as some similar studies on anisotropic crystals. See section 27.3 for developments from 1880 and important practical applications of this technique in the early 20th century.

16 Two major discoveries involving optical activity, 1845-50

16.1 Faraday: magnetic effects on light

In another very important research project by Faraday (Fig. 16-1) in November of 1845, Iceland spar played an even more significant role than in the anisotropy studies discussed above. Among other things he was looking for some relations between magnetic fields and light, and for this purpose he sent rays of linearly polarized light (from a glass mirror) through various materials including a piece of dense lead-glass which had been prepared for use in other experiments (see Tyndall 1894, chapters 10 and 11). When the glass was placed in a strong magnetic field parallel to the light beam (see Fig. 16-1) he saw with the aid of a Nicol prism that the direction of the plane of polarization had rotated by a certain angle. Faraday (1846a) soon found similar effects occurring in other solids and liquids. They turned out to be proportional to the intensity of the field and to the distance covered in the magnetized material.

This Faraday effect, as it is now known, was the first indication that magnetic fields had something to do with light. It generated immediate interest among physicists: some attempted to explain the effect with models of the structure of matter, while others set up experiments to improve and extend Faraday's results. See for instance Biot (1846) and Pouillet (1847) who mention that the instrument maker Ruhmkorff designed new electromagnets for this purpose, Matteucci (1848), Bertin (1848) and Wiedemann (1851). Wartmann (1846) observed qualitatively using mica sheets as polarizers, that heat radiation showed a Faraday effect when passing through heavy glass in a magnetic field. His results were confirmed by Provostaye and Desains (1849b), with a pair of achromatized Iceland spar prisms instead of mica. Faraday and others attempted to measure the magneto-optical effect in Iceland spar; however, these attempts did not succeed until much later (see section 28.1). Faraday also looked for some effects of electrical fields on polarized light in materials, but such effects were first detected in 1875 (see chapter 23).

Up to Faraday‘s 1845 discovery of magnetic effects on light, there were only magnetic materials (now: ferromagnetic materials, in the broad sense) and non-magnetic materials. It seems clear that this discovery encouraged Faraday to attempt observing magnetic effects in the latter class. With strong magnets, he succeeded already in December of 1845 to discover diamagnetism and paramagnetism (Faraday 1846a, cf. section 15.1). Contemplating on his findings, he suggested (Faraday 1846b) that the nature of light with its "wonderful, varied and beautiful phænomena of polarization" might be related to transverse vibrations of electrical and magnetic lines of force.

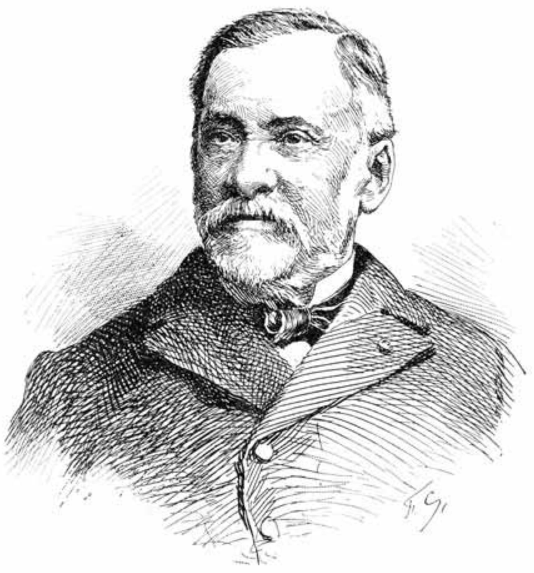

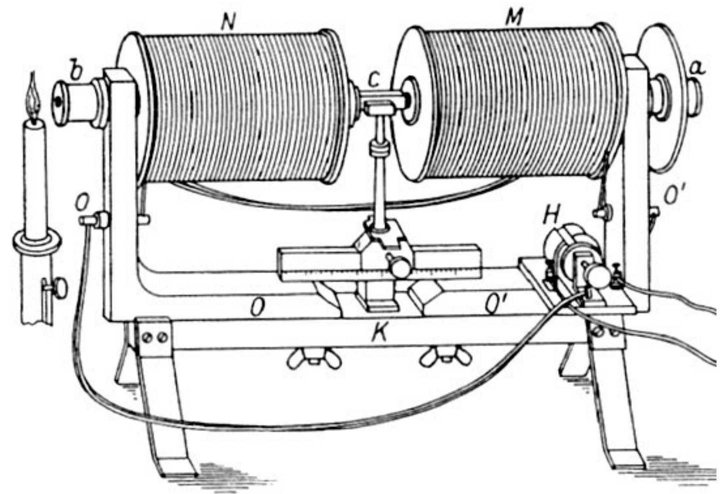

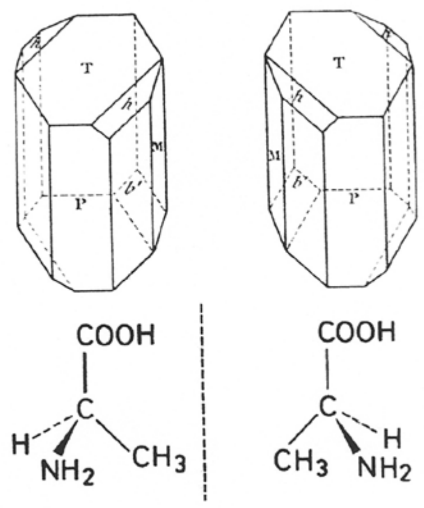

Figure 16-1. M. Faraday (1791-1867), L. Pasteur (1822-1895), and two of their important discoveries. *Left:* Equipment for studying the Faraday (1845) magneto-optical effect, i.e. rotation of the plane of polarization of light in materials placed in a magnetic field. The drawing shows a reconstruction of Biot's (1846) setup, from Handbuch der Physik, vol. 16/I, 1936. Light enters from the left through a fixed Nicol prism in b, a sample (glass rod, or tube containing liquid) at c, and another rotatable Nicol prism at a. *Right:* It was known that some compounds crystallized in two mirror-image modifications. Pasteur (1848) demonstrated that aqueous solutions of tartrate crystals (upper diagram) rotated the polarization of light respectively to the left and to the right. Subsequently, J.H. van't Hoff and J.A. le Bel suggested in 1874 that three-dimensional chemical bonds of carbon could form mirror-image molecules. In this case (lower diagram) it is the amino acid alanine. The broken line indicates a mirror.

16.2 Pasteur 1848: asymmetric crystals and molecules

As noted already, J.B. Biot was carrying out research on optical activity for much of the period from 1812 to 1860. His results and those of others had led to various hypotheses regarding the structure of matter and of molecules. Although Biot (e.g., 1844) repeatedly pointed out the potential of the method in experimental chemistry (cf. Vallery-Radot 1900), few chemists had yet followed his example when a young scientist, L. Pasteur (Fig. 16-1) became interested in studying the activity of tartaric acid ($C_4O_6H_6$, the main acid found in wine) and its salts. Biot (cf. section 12.4), F. de la Provostaye and E. Mitscherlich had written papers on certain puzzling aspects (noted in part already by Berzelius) of these compounds. Dissolved samples of tartaric acid from grapes and other plants were always dextro-rotatory, while a certain industrial product (then called racemic acid or paratartaric acid) which had identical composition and mostly identical properties, was optically inactive. Mauskopf (1976) and many others have written about the history of this research. During his work, Pasteur (1848, 1850, 1851, 1853c) slowly precipitated a salt of racemic acid, and found that its crystals looked like the two mirror images in Fig. 16-1, in equal amounts. *When these two types were separated by hand and dissolved, one gave a left-handed rotation while the other gave a right-handed rotation.* The racemic acid was thus revealed to contain equal amounts of dextro- and levo-rotatory tartaric acids. The designation “racemic mixture” has since then been applied to all such liquids. An isomer of tartaric acid not having mirror-image symmetry can be synthesized; in this and other so-called meso-compounds the optical effects of two asymmetric carbon atoms may be said to compensate for the optical effects of each other.

Mirror-image pairs (antipodes) of molecules are known as enantiomers or chiral compounds. The connection between optical activity and mirror-image crystals was immediately recognized as being highly significant, and it led to a revolution in organic chemistry a quarter-century later, see below. People soon realized the related fact that a mirror-image symmetry in quartz crystals corresponded directly to their having left-handed or right-handed optical activity. This had been noted earlier by Herschel (1822) and Weiss (1836) but not followed up. Many aspects of the phenomenon were still unexplained, for instance why quartz should be the only known optically active crystal, its activity even disappearing both upon melting and upon dissolving in strong alkali.

Pasteur (1852) found that aspartic and malic acids existed both in active and inactive (racemic) forms. He also showed (Pasteur 1853a) that an enantiomer could undergo racemization on heating: see more on that important process in section 27.4. These and his further publications clarified some matters regarding the crystallization of tartaric acid and other asymmetric compounds (cf. Mason 1982, section 1.3). Pasteur‘s results caused much stir among chemists, and many started investigating the optical activity of crystals (section 18.2) as well as organic liquids and solutions with polarimeters. Already by 1860, textbooks of chemistry were covering the phenomenon, and Perkin and Duppa (1861) performed in 1860 the first synthesis of a known chiral compound by producing tartaric acid from succinic acid. The coming decades saw the publication of hundreds of papers on the behavior of optical activity in numerous compounds under varying conditions.

Pasteur‘s first method for separating the antipodal molecules of a compound by crystallization from a solution was too laborious to be of much practical value. Also, relatively few racemic compounds produced pure left- and right-handed crystals. However, it was found (Gernez 1866) that when seed crystals of one antipode were added to a supersaturated racemic solution, this antipode was preferentially deposited. A different separation method discovered by Pasteur (1853a) was to let a racemic mixture combine with another purely right-handed or left-handed compound. The left-right molecules of such a combination often have different propertes, such as solubility, than right-right and left-left molecules do. After isolation of one type, a pure left- or right-handed version of the original compound could be recovered from it. In the next few decades, this method was mostly applied to acids and bases. See more in section 27.4.

Pasteur continued his work on the optical activity of chemicals, again making history when he was studying the effects of microorganisms on salts of tartaric acid. He found (Pasteur 1858, 1860) that they were able to distinguish between, and separate, left-handed and right-handed versions of the same compound. This was a fundamental discovery in biology. It greatly accelerated research on this aspect of organic materials, and gave rise to much discussion for instance about the origin of life on the Earth. In the case of Pasteur himself, this discovery in turn led to (Vallery-Radot 1900, p. 73-74) the research on fermentation and later on germs for which he is most famous. It may be mentioned here that some consider Pasteur's ideas about those matters to have been partially based on experimental results published by A. Béchamp. Béchamp (e.g. 1855, 1863) had studied with a polarimeter and other apparatus, how sugar solutions containing various salts changed with time due to moulds. After 1861, Pasteur briefly returned to the topic of optical activity in the mid-1870s and again in the mid-1880s, defending his earlier position on the synthesis of chiral compounds.

The processes involved in fermentation of sugars were at this time far from being understood. Depending on the fermenting agent, the sugar, and many different factors, these processes can lead to the formation of various alcohols, acids, or mucous substances. Pasteur for instance held the opinion that succinic acid which is found to be present during the alcoholic fermentation of a sucrose solution by yeast, took part in the task of splitting its molecules into the two monosaccharides. However, Berthelot (1860) demonstrated by polarimetric measurements and other means that this inversion step took place without the aid of the acid.

J.H. van't Hoff (1874) and J.A. Le Bel (1874) independently suggested a general explanation of Pasteur's (1848) discovery of the connection between the optical activity of organic compounds in solution and the mirror-image symmetry of their crystals. The ideas of van't Hoff partly originated when reading recent papers on isomers of lactic acid. J. Wislicenus (e.g. 1873) had carried out research on this acid which is optically active when derived from animal tissues (then called sarcolactic or paralactic acid), whereas an apparently identical species present in ordinary sour milk is inactive. Wislicenus considered it probable that the acid molecules could have two different shapes. *The hypothesis of van't Hoff and Le Bel is based on the view that the four valency bonds of the carbon atom are not in the same plane as previously thought. Rather, they must be three-dimensional (as if a carbon at the center of a tetrahedron is connected to four atoms or atomic groups at its corners). Therefore, a "handedness" appears in a molecule when all these four are different.* In the case of the active sarcolactic acid, they are CH_3, H, OH and COOH; the inactive fermentation lactic acid is a mixture of sarcolactic acid and its mirror-image antipode. In their original arguments, optical activity played a larger role in Le Bel's writings than in those of van't Hoff, who however soon recognized its value in this context (Hoff 1877). Their hypotheses were at first opposed or ignored by some including the prominent chemists H. Kolbe and M. Berthelot, but evidence in their favor gradually accumulated. This included the observation by Mauthner (1882) of optical activity in amino acids (Fig. 16-1); several other arguments were reviewed by Wislicenus (1888). The van't Hoff - Le Bel hypothesis subsequently became the foundation of stereochemistry, a field of chemistry which deals specifically with three-dimensional aspects of molecules and their interactions. According to Lowry (1913a, p. 545): "…no firmer basis for theories of molecular structure has yet been found than that which rests upon the use of the polarimeter to detect rotatory polarization.". This discovery also improved understanding of the question to which crystal classes optically active compounds belong (see e.g., Becke 1889).

17 Development of physical optics, 1840-80

17.1 Hypotheses and their experimental verification

On the continent of Europe, much discussion took place among theoreticians on the propagation of light in doubly refracting materials, reflection from these, and total internal reflection (Broch 1842, Senarmont 1843, 1856, Ångström 1849, Cauchy 1850b, Lang 1861, Stefan 1864c, Cornu 1867, Briot 1867, Lommel 1878, and others). I have not checked in any detail whether these were just reviews of older papers or if new ideas were being presented. At least though, Dictionary of Scientific Biography (1980-90) considers the theoretical research of Briot in optics to have led to progress in elliptical functions and other areas of mathematics. Cornu (1872, 1874a) presented a general derivation of the path of a light ray through a prism of doubly refracting material, and tested it in detail on Iceland spar. Ohm (1855) explained the interference of light in plates of uniaxial crystals. Some theoretical papers attempted to account for natural optical activity and/or the Faraday effect (Thomson 1856, Clebsch 1860, C. Neumann 1863, Lang 1863, Lommel 1881c, etc.) through ad-hoc interactions by material particles on the aether.

Cauchy (1839b, and other papers) investigated theoretically and by comparison with experiments, the polarization of light reflected from metal surfaces. In section 13.2 it was mentioned that J. Jamin (e.g. 1847) carried out detailed measurements in such cases. Formulas deduced by Cauchy in 1849 relating the polarization to properties of the metal, have been "of great value in the technical field" according to R.W. Pohl's textbook: Optik und Atomphysik, 1954. This also applies to papers by Beer (1854) and Quincke (1863) on the effect of metallic reflection on polarized light.

In Britain, much theoretical work in optics was also going on. Among papers on light propagation in crystals in 1840-50 we may mention those by Green (1842b), Kelland (1844), Stokes (1846, see Fig. 10-1) and Challis (1847), later for instance Strutt (1871c). The papers by Stokes and Challis are connected to what has been called the golden age of theoretical physics research at Cambridge University (see Timoshenko 1953): this research involved among other things various aspects of optics and elastic waves in matter. Other works by Stokes on optics include an important mathematical description of the properties of polarized light (Stokes 1852a); "Stokes parameters" which were introduced in this paper, are still being used.

For the paragraph below, a digression is needed to explain the concept of a diffraction grating. These are made by scratching a very large number of closely spaced parallel lines on plates of glass or metal. For instance, Lloyd (1857) mentions a grating with 30,000 lines per inch. Part of a light ray hitting the grating is deflected by an angle whose magnitude is a simple but accurate function of the wavelength of the light and the line spacing. By means of gratings, a spectrum

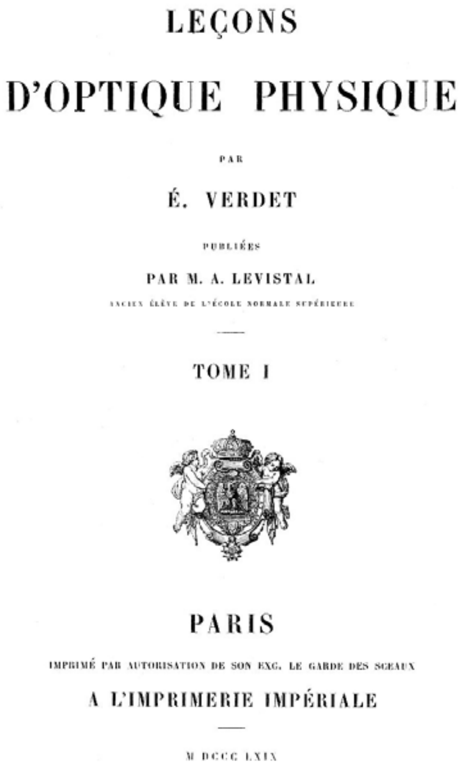

LEÇONS

D'OPTIQUE PHYSIQUE

PAR

É. VERDET

PUBLIÉES

PAR M. A. LEVISTAL

ANCIEN ÉLÈVE DE L'ÉCOLE NORMALE SUPÉRIEURE

TOME I

PARIS

IMPRIMÉ PAR AUTORISATION DE SON EXC. LE GARDE DES SCEAUX

A L'IMPRIMERIE IMPÉRIALE

M DCCC LXIX

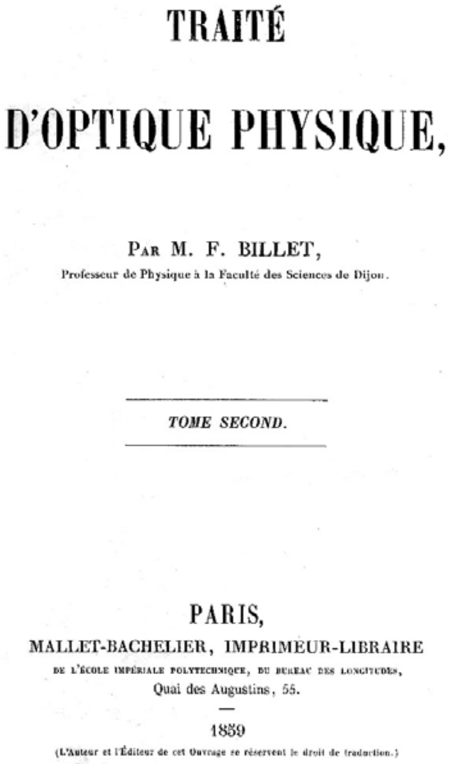

TRAITÉ

D'OPTIQUE PHYSIQUE,

PAR M. F. BILLET,

Professeur de Physique à la Faculté des Sciences de Dijon.

TOME SECOND.

PARIS,

MALLET-BACHELIER, IMPRIMEUR-LIBRAIRE

DE L'ÉCOLE IMPÉRIALE POLYTECHNIQUE, DU BUREAU DES LONGITUDES,

Quai des Augustins, 55.

1859

(L'Auteur et l'Éditeur de cet Ouvrage se réservent le droit de traduction.)

KRYSTALLOGRAPHISCH-OPTISCHE

UNTERSUCHUNGEN.

VON

PROF. D^R. JOS. GRAILICH,

CUSTOSADJUNCTEN AM K. HOF-MINERALIENKABINET.

EINE VON DER KAISERL. AKADEMIE DER WISSENSCHAFTEN AM 30. MAI 1857

GEKRÖNTE PREISSCHRIFT.

WIEN & OLMÜZ.

EDUARD HÖLZEL'S VERLAGS-EXPEDITION.

1858.

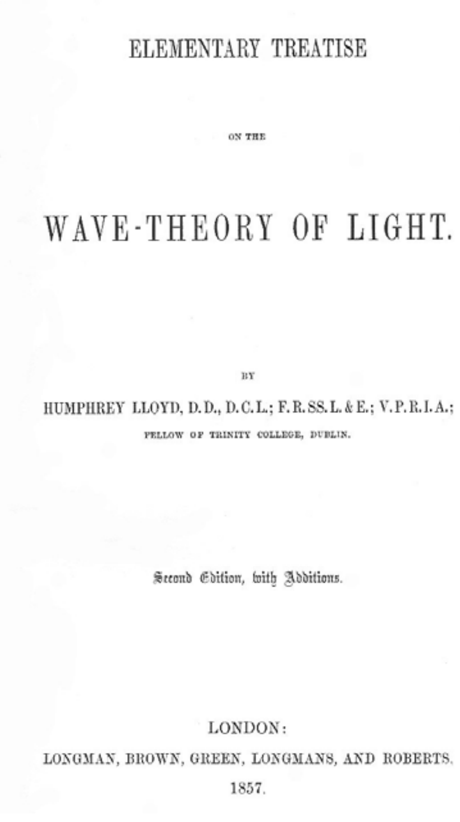

ELEMENTARY TREATISE

ON THE

WAVE-THEORY OF LIGHT.

BY

HUMPHREY LLOYD, D.D., D.C.L.; F.R.SS.L.&E.; V.P.R.I.A.;

FELLOW OF TRINITY COLLEGE, DUBLIN.

Second Edition, with Additions.

LONDON:

LONGMAN, BROWN, GREEN, LONGMANS, AND ROBERTS.

1857.

Figure 17-1. Iceland spar greatly advanced progress in physical optics. This is seen for instance in 19th century textbooks and monographs, both on the subject in general and on specific topics such as wave theory and crystal optics. The two books at the top are written around the time when A. Bertin stated (in Rev. Sci. 4, p. 136, 1867) that "the science of light is totally French". These works were published in two volumes each; if sections connected with Iceland spar and the polarization of light are removed, one volume would would suffice in either case. The lower two books are a reminder of the many contributions to optics by Irishmen in the English-speaking countries and of Austrians in German-speaking regions.

can be spread out a lot more than is possible with a prism, but the intensity of the light in each wavelength interval is low.

In 1840-80, the discussion on the properties of the luminiferous aether continued, especially on whether its oscillatory movement took place in the plane of polarization of light, or at right angles to it as Fresnel had assumed. Among the many papers contributing to this discussion are those by Schmid (1842), Cauchy (1849, 1850a), Ettingshausen (1856), Bartlett (1859), Jamin (1860), Lorenz (1860 and later), Fizeau (1861), Quincke (1862 and later), Lippich (1863), Mascart (1866), Boussinesq (1867), C. Neumann (1869) and Ketteler (1877). Rankine (1851, 1853), Haidinger (1855a), Stokes (1859) and Verdet (1865) supported the views of Fresnel, and they also considered that his hypothesis regarding a material-dependent density could be extended to crystals having a direction-dependent density of the aether. In a large paper reviewing the state of research on double refraction, Stokes (1862) suggested a new and precise method for testing this matter, see the following section. Another historical review of optical theories is by Saint-Venant (1872). Even beyond the above 40-year interval, Stokes, Quincke, J. Fröhlich, K. Exner, L. Ditscheiner, K. Schwarzschild, H. Poincaré (1892) and others contemplated whether the vibration direction of the elastic aether could be determined from measurements of the polarization state and intensity of diffracted light (that had passed around a sharp-edged obstacle or through a grating). However, Winkelmann (1906, p. 1110-1113) claims that this question was never really resolved.

The many facets of polarization and double refraction had by 1850 become a sizable part of the contents of texts on physical optics (or wave optics, as distinct from geometrical optics). Among such books were those by Lloyd (1857) and larger works by Billet (1858-59) and Verdet (1869), Fig. 17-1. University-level textbooks on physics dealt with these topics at some length (e.g. Baumgartner 1845, Christie 1864-65), and they were explained to the literate public in general science journals (e.g. Goddard 1842, Spottiswoode 1874b), popular books on physical experiments (Fau and Chevalier 1854, Frick 1856, p. 274-298), booklets (Woodward 1848) and monographs (Dove 1853; 1854 edition of Pereira 1843). In an account of a Universal Exhibition in Paris, F. Moigno (Cosmos 7, p. 490-508, 1855) states that twenty years ago the subjects of polarized light and double refraction were accessible only to few but now they may be studied by all, thanks in particular to manufacturers of optical equipment. A still larger selection of such equipment was on view at a similar Exhibition in Paris twelve years later (Österreichische Central-Comité 1867). Among polarization phenomena commonly presented in student experiments and demonstrations, were Brewster's angle, the colors of thin crystalline plates, optical activity, photoelasticity, and interference in crystal plates in convergent light. See for instance the advertisements by Griffin (1855) and Steeg (1857), and catalogs from Buron (1844), Chevallier (1845), Deleuil (1848), Benjamin Pike (1848, 1856), Duboscq (1851, 1859), Lerebours & Secretan (1853), Chevalier (1860) and Soleil (1867) which offer polariscopes, crystals of Iceland spar and other minerals, Nicol prisms, tourmaline tongs and related educational apparatus. The instrument-maker firms Franz Schmidt & Haensch and R. Fuess that were established in 1864 and 1865 respectively, later grew into major suppliers of optical instruments containing Nicol prisms.

17.2 Experiments on Iceland spar

In previous sections it has been mentioned that certain consequences of Huygens' hypothesis of an ellipsoidal shape of the extraordinary ray in uniaxial crystals like Iceland spar were tested by Hauy (1788), then with greater accuracy by Wollaston (1802b) and then with still greater accuracy by Malus around 1809. In the decades to follow, Fresnel and others extended the hypothesis of Huygens cf. section 10.1, and experimental techniques in optics were improved. The time eventually came for renewed testing of Huygens' construction in crystal specimens. Once more Iceland spar tended to be chosen because of its strong double refraction, homogeneity and other desirable properties. This was indeed a good choice, in view of the much later conclusion from X-ray research that Iceland spar was among the most perfect crystals found in nature (Compton 1916).

Billet (1859) describes a method due to F. Bernard, where the lateral shift of a ray travelling through a plate of Iceland spar was measured for different angles of incidence, giving good agreement with the theory. Desains (1862) proposed a similar method for the measurement of refraction in crystal plates, and Lang (1858) presented another one using specially cut prisms, but I have not discovered whether such measurements were actually performed. Senarmont (1847a) and Cornu (1866, 1867) investigated the reflection of polarized light from the surface of calcite crystals, finding that the plane of polarization rotated by up to a few degrees, as predicted by theory. Stokes (1872) measured refraction in Iceland spar prisms with a method previously devised by himself, concluding that the hypothesis of an anisotropic density of the aether was untenable. Abria (1874, 1875) carried out a series of painstaking measurements on refraction and total reflection in Iceland spar. Accurate measurements on the refraction of the ordinary ray in Iceland spar were also made (Swan 1849), in order to test a suggestion by J. MacCullagh that it might be dependent on direction (cf. Brewster 1843).

Grailich (1853, 1856) made an extensive theoretical study of the refraction and reflection of light at a twinning plane in a uniaxial crystal, with computation of numerical results for Doppelspath and a description of samples which he inspected. It may have caught his attention, that when one looks at a white light through an Iceland spar crystal containing such a plane, the white light is seen in the middle with a colorful image on each side. Some other crystals such as potassium chlorate also show peculiar color effects (iridescence) due to multiple twinning. These phenomena were investigated more fully by others (cf. Pockels 1906, p. 203-208), including later the Rayleigh father and son, and C.V. Raman.

The hypotheses by Huygens and Fresnel were not tested to any great extent on minerals other than Iceland spar in the period covered here. I have seen observations by Jamin (1850b) on the refractive indices of quartz, later improved by Lang (1869). Abria (1874, 1875) measured angles of refraction and reflection in quartz. G. Kirchhhoff in 1859 (see Stokes 1862, p. 272) and Glazebrook (1878) similarly measured the biaxial mineral aragonite, and Cornu (1874a, p. 43-46) made a limited study of sodium nitrate. Nicol prisms were an essential tool in much of the above work. See more in section 28.2.

17.3 On the radiation of light

P. Desains, H. Knoblauch (see section 10.5) and others continued research on infrared radiation in 1850-70. Among other things it was found (Provostaye and Desains 1851) that the light emitted by the surfaces of hot liquid and solid objects was to some extent polarized. The polarization increased with angular distance from the normal to a surface. Kirchhoff (1860) pointed out that this result was a natural consequence of a law recently formulated by him (Kirchhoff 1859a): "… for radiation of the same wavelength at the same temperature, the emissivity [of a surface] equals the absorptivity". If light from the outside was reflected to a variable degree from the surface of a body depending on its polarization and its angle of incidence, the same would apply to light coming from the inside. This was supported by qualitative experiments by Magnus (1866), but Arago (1852, 1858c) had in fact carried out similar observations before 1824! Arago's results on the polarization of thermal radiation had (according to Barnard 1863) helped to settle arguments as to whether the Sun's light-emitting surface was a solid, liquid or a gas. Since the light received near-tangentially from hot solids and liquids was partially polarized while that from a hot gas or a flame or the Sun was not, it was evident that the Sun was gaseous. Studies of the polarization of oblique heat radiation were resumed around 1890, see section 29.5.

Provostaye and Desains (1854) made quantitative measurements on the radiation emitted from hot objects, finding e.g. that blackened metal surfaces emitted much more light than polished surfaces. They employed a photometer with a Nicol prism and an Iceland spar rhomb (see section 18.4). Although others had no doubt made similar observations with thermometers, this result was quite important and agreed with Kirchhoff's (1859a) law. Cotton (1899) says in a review of this law: "A relation between the absorption and the emission of what is still called "radiant heat" had long been known, and de la Provostaye and Desains had verified it with great care". Among other aspects of radiation from hot objects considered by Kirchhoff, was the question whether the surface of a dichroic material would preferentially emit (along a normal) light polarized in the direction which is absorbed (when incident on the material). He placed a sample of tourmaline in an oven to test this, and the result agreed with his expectations but was rather inaccurate. Confirmation was however soon provided by Stewart (1860), and later by others. This may have been one stage in Kirchhoff's path towards the very important concept of "black-body radiation" which he proposed in 1862.

E. Becquerel (1863, 1867 p. 61-97) used a thermocouple, a photometer with Nicol prisms, and other apparatus in research on light emitted from hot surfaces. He also quotes measurements by F. Zöllner (1860) on glowing filaments using a photometer with a glass mirror and one Nicol prism. Becquerel concluded that the intensity of emitted light increased as a particular exponential function of temperature. In a paper in the Physical Review, vol. 13, 1901, E.L. Nichols writes about Becquerel's observations: " …his work is especially noteworthy in that he employed many of the methods to which, in the hands of later investigators, our knowledge of the laws of incandescence is due. He established the fact of the direct proportionality of the logarithm of the intensity of radiation to the temperature and pointed out the possibility of optical pyrometry".

The ability of various inorganic and biological substances to emit light without being heated, presented a puzzle to science for centuries. Depending on conditions, the phenomenon had names like luminescence, fluorescence or phosphorescence. Calcite was among these materials, giving off its own light (often orange in color) if illuminated. The first observations of the luminescence of Iceland spar by scientists that I am aware of, were made by Wedgwood (1792) and Dessaignes (1809). From the 1850's onwards, G.G. Stokes and others carried out comprehensive studies on luminescence, including its polarization. They (e.g. Stokes 1852b) found that light which was excited by other (monochromatic) light, always had a longer wavelength. This rule could not be explained before the advent of A. Einstein's quantum theory in 1905. In his research, Stokes found that quartz transmitted ultraviolet light better than other materials, and Miller (1862) noted that Iceland spar also performed quite well in that respect. See section 29.8 on applications of that property. E. Becquerel (1857, 1861, 1867) investigated luminescence for a long time (see section 18.4), Iceland spar being one of the materials that he gave special attention. Among other things, he showed with the aid of his Nicol-prism photometer, that the intensity of the radiation given off by a luminescent sample is proportional to that of the exciting light.

18 Developments in instrumentation, 1850-70

In the decades 1850-70, various new types of polarizing prisms from Iceland spar were described, for instance by Foucault (1857), Potter (1857), Jellett (1858-61), Hasert (1861), Dove (1864, beam-splitting prism), Hartnack and Prazmowski (1866), and Jamin (1869). Senarmont´s (1857, top of Fig. 12-1) prism which resembles those of Rochon and Wollaston, is still in production. This chapter will present developments within three main classes of optical instruments in which Iceland-spar prisms were a key component, namely polarimeters, microscopes and photometers. In addition, Iceland spar played a role in some other types of equipment. One example is the sensitive interferometer with two spar plates invented by Jamin (1868). This device could among other things detect very small variations in the refractive indices of materials, but it was probably more difficult to use than Jamin's popular glass-plate interferometer of earlier date. See section 39.5 for much later applications of this concept.

18.1 New polarimeters and research conducted with them, 1850-70

Among those writing about improvements in polarimeters were Senarmont (1850), Stokes (1851a), and Pohl (1856). Some of these improvements had lasting value, such as Bravais' (1855) bi-quartz plate which made it possible to use a half-shade technique in measurements on elliptically polarized light. In an advertisement by the workshop of Lerebours and Secretan (1853) which includes various apparatus containing Nicol prisms, the firm is said to have produced one hundred Soleil polarimeters for the Ministry of Finance.

A new type of polarimeters by Listing (1855), Wild (1863, 1864, 1870) and Bakhuyzen (1872) was among other things intended for measurements of glucose in diabetic urine. In this instrument a Savart plate from Iceland spar or quartz produces many parallel fringes seen by the observer, and they disappear at the right setting of a Nicol prism (Fig. 18-1). Wild (1865) described this polarimeter and its application in a special booklet at the start of its commercial production (see also Österreichische Central-Comité 1867, p. 121). Others were already testing urine with polarimeters, for instance Clerget (1849), Robiquet (1856), and Bence Jones (1852, 1861) who compared results obtained polarimetrically and by chemical analyses. Along with some other scientists he concluded that healthy people excrete a minor amount of glucose. This point was debated until the 1930s, because of disturbing influences on all the numerous methods developed for this purpose, but it was finally established that there is no glucose in normal urine.

Polarimeters where the concentration of sugar was read directly off a scale, were called saccharimeters. They were manufactured for decades, with many improvements. In these measurements it is possible to use a circular scale as in ordinary polarimeters. However, it was probably more

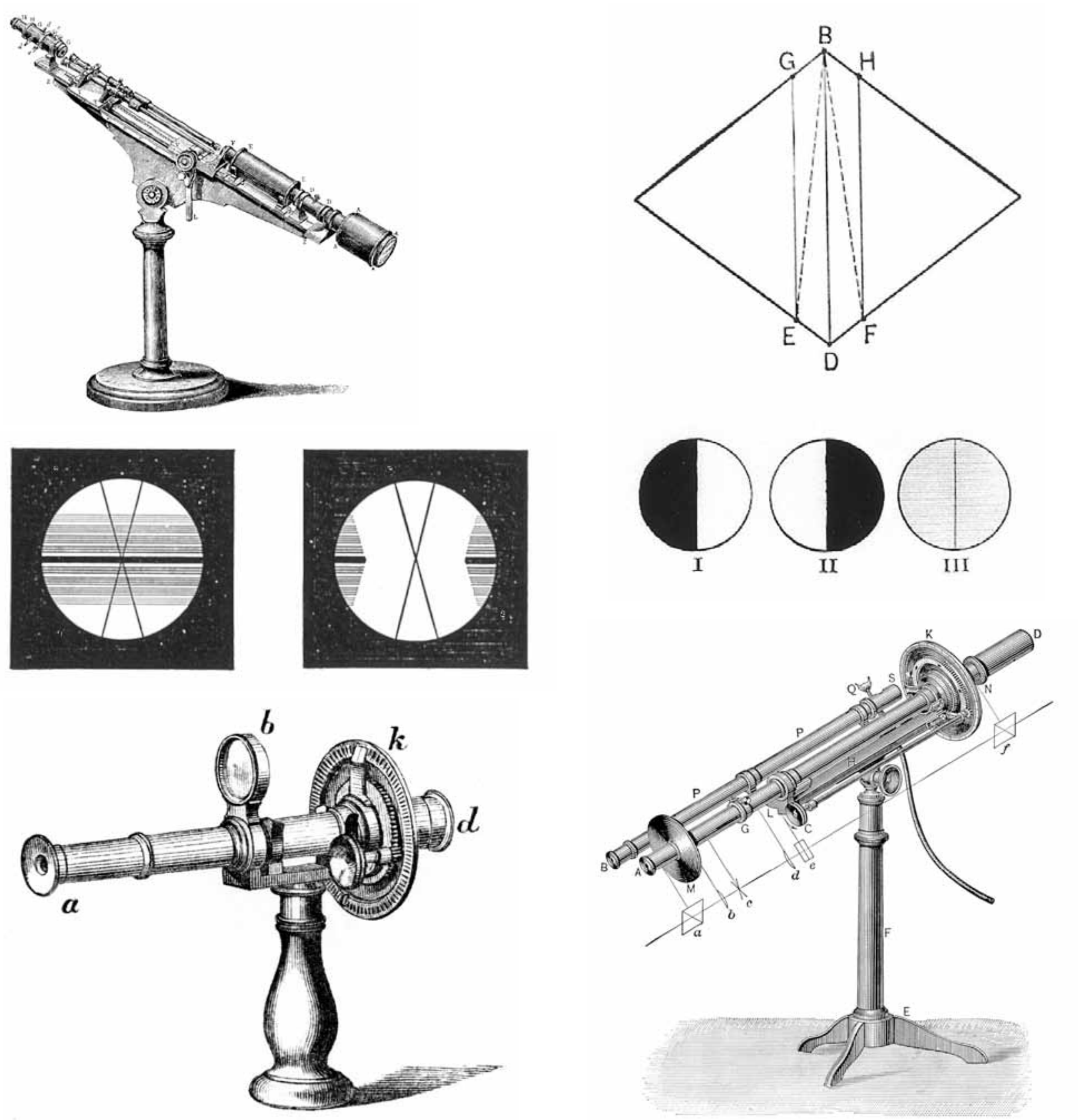

Figure 18-1. *Top left:* The polarimeter of Jellett (1861-64, 1875), containing a special polarizing prism. This prism (right) was constructed by removing the wedge BEDF from an Iceland spar rhomb and gluing the pieces together. An experimenter looking from the left saw a divided circular area, and he rotated the analyzing nicol until its two halves were equally bright as in III (right). Such "half-shade" techniques gradually became dominant both in polarimeters and photometers. *Lower part*: Instead of the half-shade, the small and large polarimeters of Wild (1864, 1870) as well as his photometer employed interference of light caused by a Savart plate. The plate is at e in the larger instrument. The observer rotates the wheel C until the stripes (center left) disappear, and then reads a scale with the telescope B (from Browne 1912).

common to keep the analyzing Nicol prism in a fixed position, letting a quartz plate (with its optical axis at right angles to the plate) rotate the plane of polarization in an opposite direction to the rotation within the fluid. The plate was in fact made of two wedges of respectively left-handed and right-handed quartz, which were moved against each other. Rolfe (1905, p. 33) states that "About 1850, Duboscq was the first to make a practical quartz-wedge saccharimeter". Here, he may be referring to the previously mentioned paper by Clerget (1849) or to Duboscq and Soleil (1850). Bence Jones (1852) describes Soleil's new meter as a perfect triumph of instrumental art. An important advantage of the quartz wedge was that a source of white light could be used, instead of the more bothersome sodium flame. The optical activity of quartz had to be known precisely; one determination at six wavelengths was carried out by Broch (1846), employing a method like that of Fizeau and Foucault (1845) from Fig. 13-2. Broch's calibration was improved by Stefan (1864a) and by Soret and Sarasin (1875, 1882). Empirical formulas for the variation of the rotation angle of quartz with wavelength (i.e. its rotatory dispersion) were proposed by Boltzmann (1874) and others.

As already mentioned, the accuracy of polarimeter readings could be increased significantly by providing a split (half-shade) field of view. The instrument designed by Jellett (1861-64, Fig. 18-1, top) was the first one where this was accomplished with a long specially cut Iceland spar prism polarizer, instead of Soleil's biquartz plate. The Jellett prism (Fig. 18-1) soon became popular, especially with improvements by Cornu (1870, see section 22.2). Production of the Cornu-Jellett prism involved cutting a thin wedge lengthwise out of the middle of a Nicol prism, and gluing the remaining parts together. It was used for decades (Schulz and Gleichen 1919, p. 66; Struers 1925; Kessler 1926, p. 1403-1404) even though it was difficult to make (Salomons 1893, p. 214) and faced competition from other precise half-shade arrangements.

Many applications for polarimeters were developed in Europe during the 1850s, following up the discoveries of Biot (1818c and later) on the optical activity of many organic materials (e.g. Pohl 1856, Buignet 1861a,b). They no doubt aided in the resurgence of the beet-sugar industry that took place there from around 1840. Thus, the polarimeters took part in the isolation of new sugars, e.g. by Pelouze (1852, sorbose) and by Berthelot (1859a, trehalose), of organic acids (Wurtz 1857) and other optically active chemicals. Poggiale (1849) showed that polarimetry might be a useful method for estimating the content of milk sugar (lactose) in milk, and Pasteur (1856) demonstrated with the aid of a polarimeter, that hydrolysis split this compound into glucose and another monosaccharide, now called galactose. Buignet (1861b) studied the sugars in many fruits containing acidic juices, concluding that the sucrose originally produced in them was gradually transformed into invert sugar during ripening. This took place to a degree which varied between species. The essential oils derived from plant constituents such as flowers, fruits, seeds, and pine needles were found to have a wide range of rotatory powers (Buignet 1861a, Chautard 1863, Gladstone 1864), aiding identification of their origin. Distillation showed some of these oils to be a mixture of chemicals, and the same applied to turpentine (Berthelot 1853). Polarimetric measurements were also undertaken in studies on camphor and related compounds from different plants by Jeanjean (1856, madder), Chautard (1858, camomile) and Berthelot (1859b, Borneo-camphor). More on camphors in section 22.2.

Here one may also mention again A.P. Dubrunfaut who was working for more than half a century to promote the sugar and fermentation industries in France, earning the title of "the father of beet sugar" from his contemporaries. He (Dubrunfaut 1869) for instance demonstrated with a polarimeter, that if raw sugar on its way to refineries is contaminated by impurities, microorganisms will ferment part of it and cause a deterioration in quality. In German-speaking areas, K. Stammer and C. Scheibler may have played a similar role as Dubrunfaut did in France; the latter founded and directed for over a decade a chemical laboratory of the German federation of sugar producers. Both published extensively on improvements in the sugar industry, often making use of polarimetric measurements. In the United States, some people had taken notice of these new instruments around 1850 (e.g., McCulloh 1847, Benjamin 1848, Riddell 1853, see Warner 2007) but their use did not become widespread there until after 1880. Almost all the sugar consumed in the U.S. was cane sugar, either imported or produced in the southeastern states: attempts at sugar production from both sorghum cane and sugar beets in the nineteenth century mostly ended in failure for a variety of reasons. More on research with polarimeters in the sugar industry and on related fronts in section 22.2.

There is no doubt that polarimeters played a part in many discoveries in chemistry, medicine and other fields in the latter part of the 19th century. One example is the thorough investigation by L. Wilhelmy (1850) on the rate of the "inversion" reaction occurring when acid is added to a solution of sucrose. He measured the sugar concentration with a polarimeter from the Soleil workshop. According to textbooks (e.g., Pringsheim 1925, p. 272) up to the present day, this study was the starting point of the development of chemical kinetics. Rolfe (1905, p. 251) says that being the first to propose a mathematical model of this (or any) chemical reaction, Wilhelmy "…opened up a field of research which has had enormous influence on the science of chemistry". Some historical accounts state that Wilhelmy's results paved the way for the "Law of mass action" proposed by P. Guldberg and C.M. Waage in 1863-67. This law embodies the dynamic nature of chemical equilibria. However, I have not seen a direct reference to Wilhelmy's work in those papers by Guldberg and Waage themselves (e.g., 1864) that I have consulted. They only refer to a series of experiments carried out by M. Berthelot and P. de St. Gilles in the early 1860s on reaction rates and equilibrium states in the formation of esters from acids and alcohols. That study did not employ polarimetry.

J.H. Jellett (1875) who was mentioned above, applied his polarimeter to a series of investigations on chemical equilibria and on the properties of sugars and alkaloids (more on them at the end of this section). It seems that his results did not attract much attention at the time, but in a preface to the German edition of Jellett's paper in 1908, W. Nernst points out that they contain some notable extensions to those of Guldberg and Waage. Hoppe-Seyler (1866) and Voit (1867) studied the diffusion of sugar in an aqueous solution with polarimeters; it may be of interest that A. Einstein made use of data from further research by others on this phenomenon in his doctoral thesis published in 1905. With respect to the chemistry of sugars, the major steps forward were taken in E. Fischer's work which began in the late 1880s, see section 27.4.

During the time interval being considered here, chemists finally began sharing J.B. Biot's conviction that research on optical activity might provide important information on molecular structure. Krecke (1872) remarks in a review article, that "…hardly any branch of science is better equipped than the measurement of optical rotations, to guide chemists in their research on the structure of molecules". One of those who became interested in optical activity, was Arndtsen (1858) who for instance studied the anomalous rotatory dispersion of tartaric acid and suggested an explanation of it (see section 12.4). This matter will be treated more fully in section 22.3.

C. Bernard who established in 1850 that glucose is produced in the liver of animals, demonstrated with the aid of a polarimeter that it was fermentable (Bernard 1853, p. 24-25). Becquerel (1849) and Hoppe (1857) describe how they made use of polarimeters in measurements of albumin in serum, milk, urine and other bodily fluids when diagnosing illness. The former designed a polarimeter dedicated to this purpose which was available commercially for a while from suppliers like Menier (1860). However, it was soon superseded by more practical equipment of different kinds. A. Béchamp completed a doctoral thesis in medicine 1856 on albumin and related proteins, and according to the Dictionary of Scientific Biography (1980-90) he employed a polarimeter to discover various properties of these that had not been resolved by older methods. He later published valuable papers on these proteins, again with polarimetric observations playing an important role (e.g. Béchamp 1873, 1884).

Alkaloids are a class of substances whose molecules often contain a five- or six-member ring including one N atom. They are commonly found in various parts of higher plants (flowers, leaves, roots, bark, etc.) and occasionally in animals. Alkaloids have through the ages had various functions as medicines, addictive drugs, or poisons. Most are optically active. They include quinine and many related compounds, atropine, codeine, strychnine, cocaine, nicotine, and morphine. A. Bouchardat who appeared in section 13.2 above, investigated among other things optical activity in several well-known alkaloids, in collaboration with Biot (Bouchardat 1843, Biot 1843b). Further studies especially on the quinine group were made by Bouchardat and Boudet (1853) and Pasteur (1853b), who sorted out some ambiguities between material from different sources. Wilhelmy (1850) and Buignet (1861a) also published measurements on alkaloids.

Jamin‘s (1850a) instrument of section 13.2 dedicated to analyzing elliptically polarized light was described in various textbooks of the period covered here (e.g. Lloyd 1857, Billet 1859). Not much new experimental work seems to have been carried out in this field, although some manufacturers were advertising it or spectrometers with polarizing attachments (Duboscq 1870, Meyerstein 1870, Lutz 1872). Jamin‘s "grand circle" with modifications by H. Senarmont was later produced commercially (Duboscq 1885, Pellin 1899, and other catalogs) and used for decades in similar research, e.g. by Kent (1919).

18.2 Microscopes, Nicol prisms and thin sections of rocks, 1850-70

Disney et al. (1928) and Turner (1989) describe many old microscopes preserved in a London museum, including some from the mid-19th century with fixed or detachable Nicol prisms. Among them are two from the makers Powell & Lealand delivered in 1850-53, one from Smith & Beck around 1850, one from A. Ross around 1853 and one from Negretti & Zambra around 1855. Bryson (1850) also refers to microscopes with Nicol prisms. In France, Nachet (1979) offers a microscope attachment with two Nicol prisms in his 1856 catalog. In the United States, polarizing microscopes were advertised by J. & W. Grunow (1856) and B. Pike (1856). Books and papers (Bird 1853, Hogg 1854, Pereira 1854) continued to recommend the use of polarized light in various situations. However, I have not come across many papers by scientists in the U.K., France or the U.S. before 1855 on comprehensive studies involving polarization microscopy. In that year, one book (by H. Schacht, in Berlin) even asserts that "Polarizing outfits on microscopes are better suited for playing with beautiful color effects than for learning anything scientific". In the U.S., books by Wythe (1851) and Carpenter (1856) similarly emphasize such effects.

Marbach (1854) used a polarizing microscope when he recorded for the first time optical activity in the cubic crystal system, namely in sodium chlorate. In another paper, Marbach (1855) discussed the presence of double refraction in cubic crystals and related peculiar properties of various minerals (in fact noted much earlier by D. Brewster). These properties have since then been called "optical anomalies", see section 22.4. Marbach did not describe his microscope or mention where it came from. However, it may be the same one as his teacher M.L. Frankenheim (1854, 1860) used in research on the growth and dissolution of crystals. Frankenheim's instrument had two Nicol prisms.

Kobell (1855) designed a polariscope which he called a stauroscope, in order to identify minerals with the aid of the interference patterns like those in Fig. 7-2. It contained a glass-mirror polarizer, a special calcite plate and a tourmaline-plate analyzer. This was modified into a stauromicroscope by Highley (1856). J. Nörrenberg demonstrated in 1858 (Groth 1926, p. 105, 246) a low-power mineralogical microscope with a glass-mirror polarizer, seven or nine converging lenses around the crystal-plate specimen, and a Nicol-prism analyzer (Fig. 18-2). An early version where the polarizer was a Nicol prism, was described by Pierre (1859) who praised its wide field of view. This Nörrenberg instrument soon became popular, see Grailich (1858, p. 43), Bertin (1863) and Dippel (1867, p. 214-215). It should not be confused with the simple one of Fig. 10-3 which at most employed two removable lenses (Eisenlohr 1857).

A. Des Cloizeaux began studying plates of transparent minerals with Amici's microscope around 1855 (Des Cloizeaux 1855, 1857a) and with Nörrenberg's microscope around 1860, cf. his

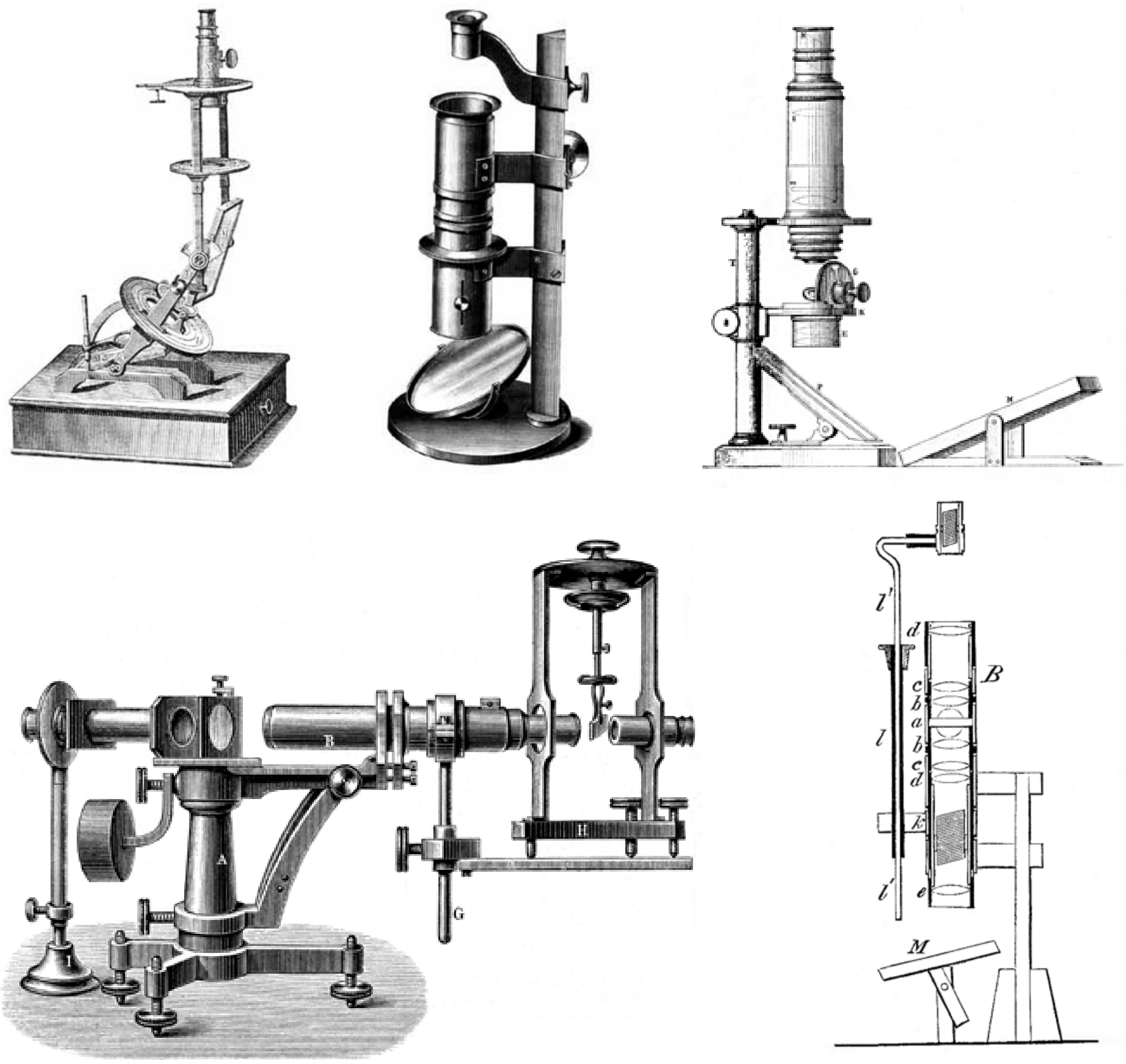

Figure 18-2. Polarizing microscopes for studying thin crystal plates. *Top left*: Wheatstone's (1871) instrument, as improved by Bertin (1879). *Center*: J. Nörrenberg's apparatus from 1858 (cf. Bertin 1863). A glass mirror acts as polarizer while a Nicol prism is the analyzer. *Right*: The microscope of Des Cloizeaux (1864). *Bottom left*: Kirchhoff's (1859b) equipment for measuring axial angles. Illustration from Verdet-Exner (1887). *Right*: The microscope described by Grailich (1858), with two Nicol prisms..

book on mineralogy (Des Cloizeaux 1862) and Bertin (1863). He investigated some 500 minerals (according to D.S.B.) and was the first of his countrymen to employ optical methods to any extent in mineralogical research (Lacroix 1893). See for instance Des Cloizeaux (1861) where a microscope with at least one Nicol prism is described. Klein (1886, p. 11) states that Des Cloizeaux found a way to determine from interference patterns whether a given mineral grain was othorhombic, monoclinic or triclinic. Grailich (1858) wrote a book (Fig. 17-1) on his studies of many minerals and man-made crystals, initially carried out with an Amici polarizing microscope and a Kobell stauroscope. Later he constructed a much more satisfactory microscope with two Nicol prisms (Fig. 18-2) for his crystal plates, modelled after that of Nörrenberg. Rath (1860) and Dove (1861) were also familiar with such microscopes containing Nicol prisms, but their use was not common among geologists before 1865; see literature quoted by Young (2003).

A comprehensive article by Des Cloizeaux (1864) contains illustrations of two microscopes. His designs were manufactured commercially into the mid-1870s at least. The polarizer is either glass plates (Fig. 18-2, the method of Amici and Nörrenberg) or a Nicol prism, and the analyzer is a Nicol prism. He was the first to take photographs through such a microscope (see Des Cloizeaux 1855, and an obituary by A. Lacroix in Bull. Soc. Minéral. Fr. 20, 1897). Des Cloizeaux could measure the angle between the optical axes in biaxial minerals, and he (Des Cloizeaux 1866) also installed a heated stage in a microscope to test the effects of elevated temperatures on minerals. V. v. Lang similarly constructed a specialized instrument to measure axial angles in 1862, and in a paper on a new model of this instrument he (Lang 1867) says that "…studies of the optical constants are becoming of more and more importance in the identification of minerals". Lang (1871) also improved Nörrenberg's polarizing microscope, and Kirchhoff (1859b) introduced a new axial-angle instrument (Fig. 18-2). As referred to in section 13.3, Wheatstone (1871; Bertin 1879, Fig. 18-2) presented a modification of Nörrenberg's apparatus for observing interference colors in crystals, where the polarizing glass mirror could be replaced by a special silver plate.

Des Cloizeaux (1857b) found that the mineral cinnabar (HgS, trigonal) showed strong optical activity, and soon such behavior was noted in some other uniaxial crystals. This and Marbach's (1854) discovery of an active cubic crystal mentioned above, generated new discussions on the symmetry of crystals (e.g., Lang 1869). More on these matters in section 22.3.

Kristjánsson (2000) has reviewed some stages in the emergence of methods for the microscopic examination of thin transparent sections of rocks. The main pioneers in this field were A. Oschatz and H.C. Sorby from the early 1850s, especially the latter who (Sorby 1853) emphasized that it is almost indispensable to use a polarizing microscope for such work. Sorby (1858) and also Websky (1858) described examples of the advantages of thin-section studies in polarized light. F. Zirkel developed the technique further in the 1860s and drew attention to it in his textbooks (e.g., Zirkel 1866, 1873). In Zirkel's (1863) first paper on microscopic studies of thin sections, some of these were made from rocks which he had collected in Iceland. From the publications that I have consulted, it is clear that Zirkel and his collaborators had started using polarized light by 1864. For instance, H. Vogelsang (1867) states in paper containing descriptions and colored micrographs of some thin sections: "Excellent support is provided by the use of the polarizing microscope, not only in distinguishing between mineral species such as quartz and feldspar, or triclinic feldspar with its twinning from monoclinic, or leucite from rounded feldspar grains and so on. In particular, it allows you to make decisions about the nature of those constituent parts of the rock which we usually designate in somewhat loose terms as groundmass. We can also ascertain whether it is in a glassy, semi-crystallized or crystallized state.". Similar experiences are described by Forbes (1867), Allport (1870) and Vrba (1871) who points out that fundamentally different rock types can have identical chemical compositions.

In addition to the above quotes from Vogelsang, the advantages of mineralogical analysis by examination of thin sections (of standard thickness) in a polarizing microscope include:

- The method is convenient, and is non-destructive unlike chemical analysis.
- In polarized white light with crossed Nicol prisms, each mineral grain has characteristic colors which are not seen in ordinary light. From these a trained observer can estimate the difference between its refractive indices, a useful diagnostic tool for grain types of similar appearance.
- Twinning which is a very useful characteristic, is clearly seen; also color changes (di- or pleochroism) due to direction-dependent absorption of polarized light.
- Systematic variations (zoning) in composition within grains are more noticeable than in ordinary light.

- Measurements may be made on small grains or parts of these, not readily accessible for analyzing by chemical methods.
- Polarized light aids in finding out in what order the minerals in an igneous or metamorphic rock sample crystallized. Stages of alteration and especially features like pseudomorphs can also be investigated (Allport 1874).

One of those who was applying polarizing microscopes to the study of thin sections already by 1870, was G. Tschermak (1869a) in his research on the composition of various common minerals such as the plagioclase feldspars. These feldspars form a continuous range of isomorphous crystals from albite to anorthite, with calcium and aluminium gradually replacing sodium and silicon. His studies resolved long-standing series of erroneous notions about these feldspars, where even Icelandic rocks played a role under names like baulite, krablite and havnefjordite. Another paper on petrography by Tschermak (1869b) contains several colored drawings of thin sections in polarized light. Rath (1868) found a mineral where the chemical compound SiO_2 crystallizes in a different class from quartz, calling it tridymite. Subsequent industrial applications are mentioned in section 22.3. Maskelyne (1870) describes his observations on minerals in meteorites, where he employed a polarizing microscope. Kile (2003) recalls the large volume "Microscopical Petrography" by Zirkel (1876) which was part of a comprehensive survey of the geology of the United States along the fortieth parallel. It contained 44 chromolithographs of thin sections with detailed explanations. According to Kile, this work "established petrography as a fundamental science", and geological institutions in the U.S. soon began hiring scientists to carry out research in that field. See section 22.4 for some practical applications.

18.3 Polarizing microscopes in biological research

It may be mentioned here in passing, that W. Nicol published in the 1830s some observations on thin sections from wood (including fossilized material), however without employing the prisms he had invented. I have only gathered limited information on how biologists made use of polarized light in microscopy before 1870, but it was known by 1840 that for instance material from eyes (Brewster 1816c), insects (Goddard 1839), bones, muscles, wood fibers (Boeck 1839), seashells (cf. Carpenter 1844), and starch particles (Biot 1837) exhibited polarization interference colors in a similar way as crystals did. Erlach (1847) describes a microscope with two Nicol prisms with which he observed various plant and animal tissues, and he published drawings of these. The microbiologist C.G. Ehrenberg (1848, 1849) refers to previous work by others and also lists many examples where in his own experience polarized light helps in the microscopic examination of biological specimens. It allows the observer to distinguish between organic and inorganic objects, as well as between crystallized and uncrystallized material. In those of his papers that I have seen, it is not stated what sort of polarizing apparatus he was employing. Mohl (1858, 1859) pointed out that Ehrenberg and other pioneers in the field did have various incorrect ideas, but he agreed that a polarizing microscope reveals features not seen in ordinary light, for instance in his studies of cell membranes. He found that crystals were present in much greater variety and numbers in the vegetable kingdom than previously known. In Mohl's opinion Nicol prisms are far superior to other means of polarizing light. See also White (1858), Brücke (1858), Margo (1860) and Rouget (1862) who published detailed observations of muscles from various animals accompanied by illustrations in color, and Klebs (1864) who investigated nerves in muscular tissue.

The well-known physiologist G. Valentin investigated in the period 1858-81 tissues from plants and animals, both with a Nörrenberg microscope and a similar-looking setup designed by H. Wild. See for instance Valentin (1858) on the nature of the crystalline lenses of the eyes of many animals. His book (Valentin 1861) contains a detailed account of the properties of polarized light and appropriate microscopic equipment, as well as short descriptions of many types of tissues. C. Nägeli also published many papers from 1861 onwards on the detailed appearance of vegetable tissues in polarized light (e.g. Nägeli 1862). He considered starch grains, cellulose membranes and much other organic material to be composed of crystallized molecular groups which he called micelles, separated by thin films of water. "The crystalline nature of the micelles is especially obvious in polarized light" he states in an 1879 publication. A number of colleagues contested his interpretations, suggesting in particular (e.g. Wiesner 1886) that the double refraction observed in plant cells was due to internal tensions rather than crystalline structures. However, it is clear that Nägeli's work stimulated much research into fundamental aspects of botany and cytology for a century (Zsigmondy 1925, p. 39, see also Muralt and Edsall 1930, p. 352 and Dictionary of Scientific Biography 1980-90).

Harley (1865), a professor of physiology and histology, introduced to German readers a binocular polarizing microscope which was already in wide use in England. Nägeli and Schwendener's (1867) popular comprehensive book on biological microscopy placed considerable emphasis on the advantages of polarized light. The book contains advertisements from microscope makers, several of which offer polarizing attachments. Dareste (1871) described particles in egg yolk which exhibited birefringent properties like starch. These particles consisted in part of lecithin which later turned out to belong to so-called liquid crystals (section 27.2). Various other biological features were probed with polarized light, including cartilage (Müller 1861), fish skin (Schultze 1861) and dichroic crystals from blood (Lang, in Rollett 1862).

18.4 Iceland spar in measurements of light intensity, 1850-70 (with some pre-history)

Photometers are devices for the measurement of the intensity of visible light. The first photometers appeared already in the 18th century, cf. the chapter on P. Bouguer in Dictionary of Scientific Biography (1980-90). Electrical sensors (thermopiles) for detecting heat radiation were invented around 1830 (see Melloni 1836). Photometry was not a prominent branch of optics in the first half of the 19th century, but it has since then become an important field both in science and technology. Until the 1920s, most measurements with photometric instruments were relative: an observer saw two sources of light of the same color, preferably close together in his field of view. One source was of unknown intensity and the other was supposed to be known. The observer would adjust the brightness of one of them by a measureable factor until they appeared equal.

One of the several methods employed for this purpose is based on a law proposed by Malus around 1810 (section 6.5), regarding a light beam that is reflected successively from two glass-plate mirrors as in a Nörrenberg instrument (Fig. 10-3). Its intensity should change as $\cos^2 s$ where s is the azimuth angle between the beam's planes of incidence on the mirrors. Another possible method consisted in varying the angle of incidence on the glass surface and applying Fresnel's (1823) formulas for the proportion of light reflected. Photometric apparatus of this type was tested by Arago (1835, 1841, 1858c) and later for instance by Jamin (1847), Babinet (1853, see Dahlander 1902), Wild (1856) and Crookes (1868) who in some cases added a Nicol prism or a beam-splitting prism. This method does not seem to have been used much subsequently, because of some practical problems. However, Wild (1888, 1890) described a new version of his photometer, and workshops advertised improved models of Babinet's instrument in 1860-1900 (e.g. Duboscq 1870, 1885, Pellin 1899).

Arago (1833, 1835 and later, see Lloyd 1834, p. 384; Wild 1863) confirmed the other law named after Malus (see Fresnel 1822b) concerning a linearly polarized light ray that falls on an

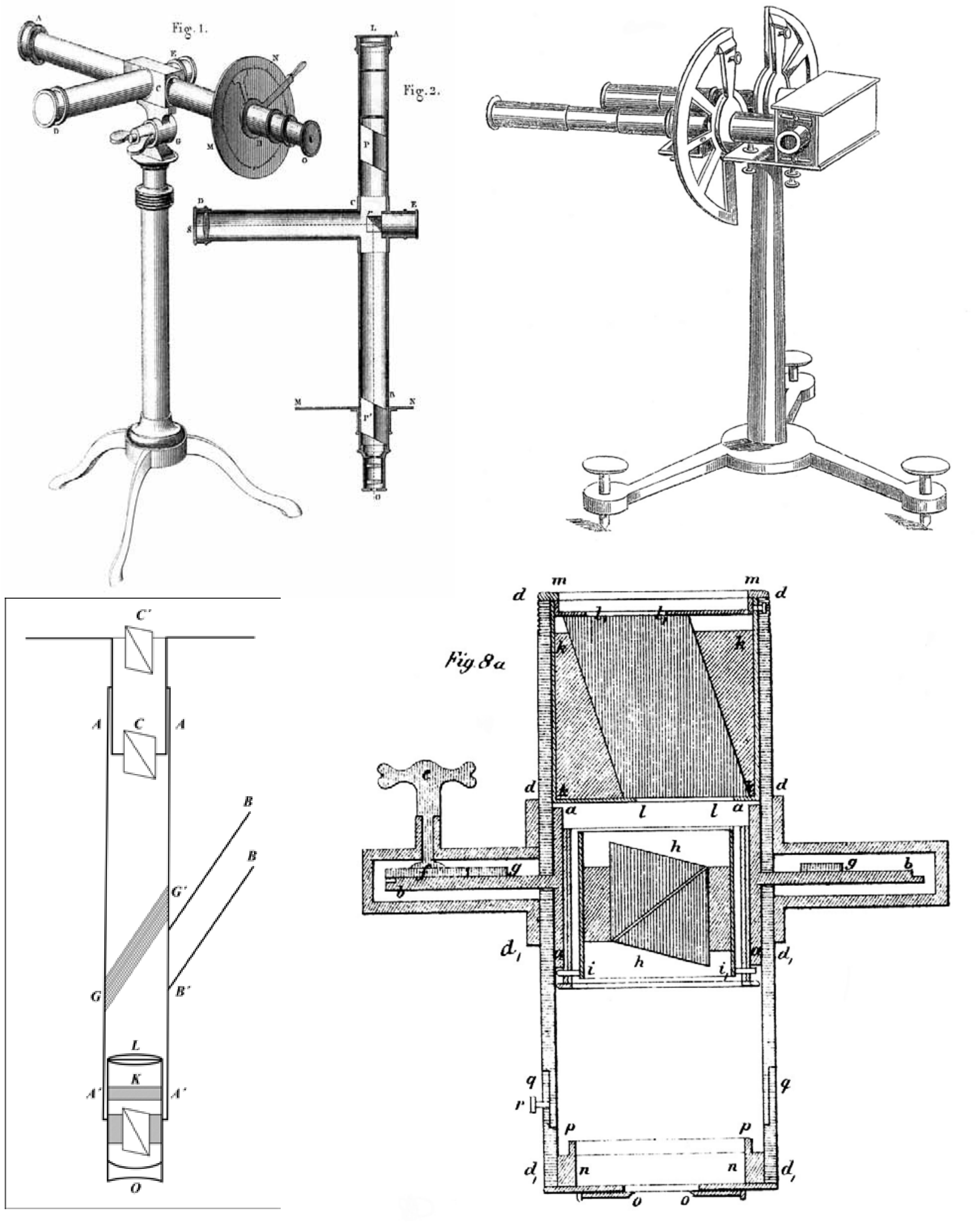

Figure 18-3. Older types of photometers. *Top left:* The instrument used by E. Becquerel (1861) in his research on heat radiation and luminescence. P and P' are Nicol prisms. *Right:* The photometer of F. Bernard (1852). Light from two sources to be compared arrives from left through the tubes; in each tube there are two Nicol prisms. Right-angle glass prisms deflect both light beams towards the eyepiece. Rotating one of the wheels will attenuate the respective beam in a known proportion. *Bottom left:* A diagram redrawn from Glan (1870), illustrating his first photometer. It contains three Nicol prisms, a crystal plate K, a pile of glass plates GG' and a tube BB'. The observer looks upwards. *Right:* The main part of Wild's (1863) photometer, with a Nicol prism of Foucault type and an Iceland spar rhomb. The remaining part is more or less Wild's polarimeter described earlier.

Iceland spar crystal. Then the intensity of one of the rays passing through the crystal is proportional to $\cos^2 a$ and that of the other one is proportional to $\sin^2 a$, where a is the angle between the plane of incidence and the principal section of the crystal. In this way the intensity of a light beam could be changed continuously by known amounts. This was used by Arago (1833) in devising an astronomical instrument which essentially consisted of Rochon‘s distance meter (section 6.4) with a rotatable polarizing prism in front (Fig. 10-3). He or his collaborators estimated relative intensities of light from the Moon, several stars including double stars, and satellites of Jupiter. Talbot (1834b) also pointed out the possibility of making a Nicol-prism photometer.

One of those who later constructed such photometers was Beer (1851, 1852). In the latter paper he measured the attenuation of light in aqueous solutions of several compounds at varying concentrations. He deduced from his experiments a simple law governing light transmission in such solutions, extending a law proposed by J.H. Lambert in the 18th century. The fraction of the light intensity remaining after traversing a distance in a liquid is a exponential function of the negative product of the distance and an "extinction coefficient" depending on the liquid and the wavelength. Beer found that in a non-absorbing solvent, the coefficient is proportional to the concentration of the absorbing solute. This is often called Beer's absorption law or the Lambert-Beer law. It has been of great practical importance, for instance in chemical analysis. Roudolf (1852) used a photometer of Beer's type to make a thorough evaluation of the illumination provided by various types of lamps and fuel.

Later, photometers containing Nicol prisms and/or Iceland spar rhombs were designed and used in a variety of research situations by Bernard (1852, 1853, Fig. 18-3), Provostaye and Desains (1854), Hagen (1859), Dove (1861), Wild (cf. for instance Wild 1863, Fig. 18-3), E. Becquerel (1861, 1867, Fig. 18-3), Glan (1870, Fig. 18-3). Lallemand (1871), and others. Bernard considers this to be the most accurate photometric method available. Wild‘s instrument incorporated a Savart plate like his polarimeter; this was also done by H. Soleil in a prototype photometer in 1857. According to Becker (1903), Hagen was the first to study the absorption of light by crystals as a function of wavelength. Glan (1874) confirmed with his instrument the validity of Fresnel's laws regarding the amount of light reflected from glass at various angles of incidence. Becquerel investigated luminescence in many materials including Iceland spar and uranium salts, in addition to his work on the radiation of hot objects already mentioned. Some of these photometers were developed further and produced commercially, see sections 29.4 and 29.5.

Zöllner (1861, 1865, 1866) who had previously used Nicol prisms in research on heat radiation, designed three types of instruments containing such prisms for measurements of the magnitudes of stars and planets. With the addition of a quartz plate (Zöllner 1861, 1868), one of these was employed to a minor extent in the classification of 37 stars by their color. See Sterken and Staubermann (2000) and section 29.6 below.

In optical experiments it was often convenient to have means of arbitrarily varying the intensity of a light beam, without necessarily measuring this intensity. Using a fixed and a rotatable Nicol prism was one of these methods; the earliest account that I have seen is in Hankel's (1862) paper on the absorption of ultraviolet rays in various materials.

19 Mining of crystals at Helgustadir, 1850-79

The main printed sources of information on the Helgustadir calcite quarry in the second half of the 19th century are papers and books by the Icelandic geologist Thorvaldur Thoroddsen (1889, 1890, 1892-1904, 1958-60). I have also inspected briefly documents in two small filing boxes at the National Archive of Iceland: Journal 16 nr. 368 from the Department for Iceland in Copenhagen and Diary 7 from the Government's II. Office, file 385. These cover respectively the time intervals 1855-84 and 1885-1908. The handwriting on many of these documents is not easy for untrained people to read, and they need to be looked at more closely. It is quite likely that more written material may be found elsewhere in the National Archive, at the manuscript department of the National Library, or in other Icelandic and Danish archives.

According to Thoroddsen, the first attempt at exploitation of the crystal site for export was made around 1850 by T.F. Thomsen, a merchant from the village of Seydisfjördur some distance to the north. From 1854 a merchant by the name of Svendsen (sources do not agree on his first name and nationality) in Eskifjördur leased the site from the Reverend T. Erlendsson who owned ¾ of the farm Helgustadir, at least for the period 1855-60 at a fixed annual rate. The remaining ¼ was owned by the State (I have not been able to find out since when), which also received a smaller annual sum by Svendsen. An Inspector of the property was appointed by the authorities. A probably inaccurate but interesting account appears in an item in the Annual Report of the American Institute of the City of New York for 1864-65, p. 394. It indicates that a shipload of spar was purchased from Svendsen around 1855 by a Hamburg merchant, and found on arrival to be finely crushed and murky material, fit only for making lime.

In a letter from Mr. Th. Pétursson of a farmstead annexed to Helgustadir, dated 15 March 1860, there is an account of Svendsen's mining activities and his efforts to sell the crystals abroad. These efforts were not very successful to begin with (in 1855-56) but on the whole he did not lose money on the enterprise. At that time a good deal of Iceland spar must have already been available in Europe cf. a paper by Volger (1856, and a preface to it by W. Haidinger) who tells of attempts in Switzerland to polish "a piece of the purest and most transparent Doppelspath from Iceland". Judging from the paper, he had a choice of several such pieces. At a similar time J.J. Griffin (1855) in London and the optician W. Steeg (1857) in Bad Homburg advertise that they sell Nicol prisms (the latter in all sizes) as well as other Iceland spar components, see Appendix 1B. Pétursson also states that little was done at the site in 1857 and 1858, but in 1859 70 crates of spar totalling 5600 pounds weight were exported. For instance, Albert (1859) in Frankfurt is advertising "excellent Nicols", projectors with "quite large calcite prisms" and other such wares. Menier (1860) in Paris also advertises spath d'Islande of complete purity, priced by the kilogram, as well as Nicol prisms and various polarizing instruments. According to a letter from the local sheriff in the National Archive dated 27 Dec 1860, a ship carrying 20 "commerce læster" (= 40 tons?) left at some time that year, another one took 866 pounds and a third 900 pounds. The Nordanfari newspaper reports in July of 1862 that a ship had been wrecked in a gale in the Spring of that year, while being loaded with Iceland spar at Helgustadir. It should be noted that most of the material recovered there may have been of inferior quality, including crystals with disfiguring "oblique colored stripes" as explained by Pétursson (probably twinning, cf. section 17.2). Documents relating to activities around 1860 are difficult to read, but in the Fall of 1862 a trader named Elis Iversen is trying to obtain a lease on the Helgustadir site. According to the above-mentioned newspaper, his men were working hard at the site in the following winter months.

C.D. Tulinius who was born in the border region between Denmark and Germany, became manager at Ørum & Wulff's store in Eskifjördur in 1859 and bought that business around 1864. He made a deal with the Rev. Erlendsson, by then his father-in-law, to exploit the Helgustadir outcrop (jointly with Iversen to start with) for the period 1863-72 and pay the State an annual fee. The first contract with the State ran for five years with a sum of 100 rigsdaler being paid each year. The contract was then extended for two years at 20 rigsdaler per year, and extended again through 1871. It is not clear to me whether Tulinius was obliged to file any reports on the quantities of crystals that he sold, or on his earnings, to the authorities. However, contemporary export records in economic bulletins (Landshagskýrslur, published by the Icelandic Literary Society) sometimes list Iceland spar: for instance, 32 thousand pounds in 1866, nothing in 1867-70, 44 thousand pounds in 1871 and 120 thousand pounds in 1872. Hessenberg (1866) says that thousands of crystals from Iceland have been delivered to workshops and scientific laboratories, see Appendix 1B. In addition to advertisements and catalogs already mentioned, Lutz (1872) offers optical equipment including rhombs of Iceland spar and Nicol prisms in many sizes.

Around 1870 the authorities wanted to find out whether Mr. Tulinius was carrying out his operations responsibly, and whether the State might be able to increase its revenue from the site. F. Johnstrup, a professor and head of the mineralogical museum of the University of Copenhagen, was commissioned to investigate the matter. He visited the locality in 1871, on his way to evaluate sulfur mines. At that moment Tulinius himself was in Britain selling the crystals, but his men worked day and night during the summer "blasting the rock with gunpowder so that much more progress is made than ever before" according to the Nordanfari newspaper. Prof. Johnstrup's report on Tulinius' activities is dated 28 Nov of that year. Among other things he was worried that at the current rate of exploitation the Iceland spar might be fetching too low a price, and also that the site might be depleted quickly. Johnstrup suggested a cessation of the mining for some years. He had also heard that foreigners (mostly French) had been picking crystals there, which could damage the deposit.

However, it was decided to lease the mining rights to Tulinius for one more year, i.e. 1872, but the local sheriff and the Inspector were told to keep an eye on the place to make sure that he was not over-exploiting it. This caused some complaints by Tulinius, cf. letters from him in the National Archive dated 2 March and 12 Aug 1872. He also demanded compensation for being unable to fulfill conditions in his rent deal with Rev. Erlendsson on the ¾ of the property which by then had been extended to 1877.

The government arranged for the outcrop, by now a veritable quarry, to be covered by gravel in late 1872. C. Tulinius bought the ¾ part of Helgustadir from his father-in-law in 1872 or 1873. Johnstrup wrote a supplementary report dated 19 June 1873, emphasizing that the crystal site was a "unique natural wonder" which should be treated with care. He also discussed the merits of various forms of ownership, mining operations, and trade in the products, considering himself that the State should not become involved in the two latter aspects. In official records of parliamentary debates in 1879, Johnstrup is said to have recommended that the extracting of crystals would take place only every sixth year. G. Aragon who was travelling around Iceland on a vessel patrolling

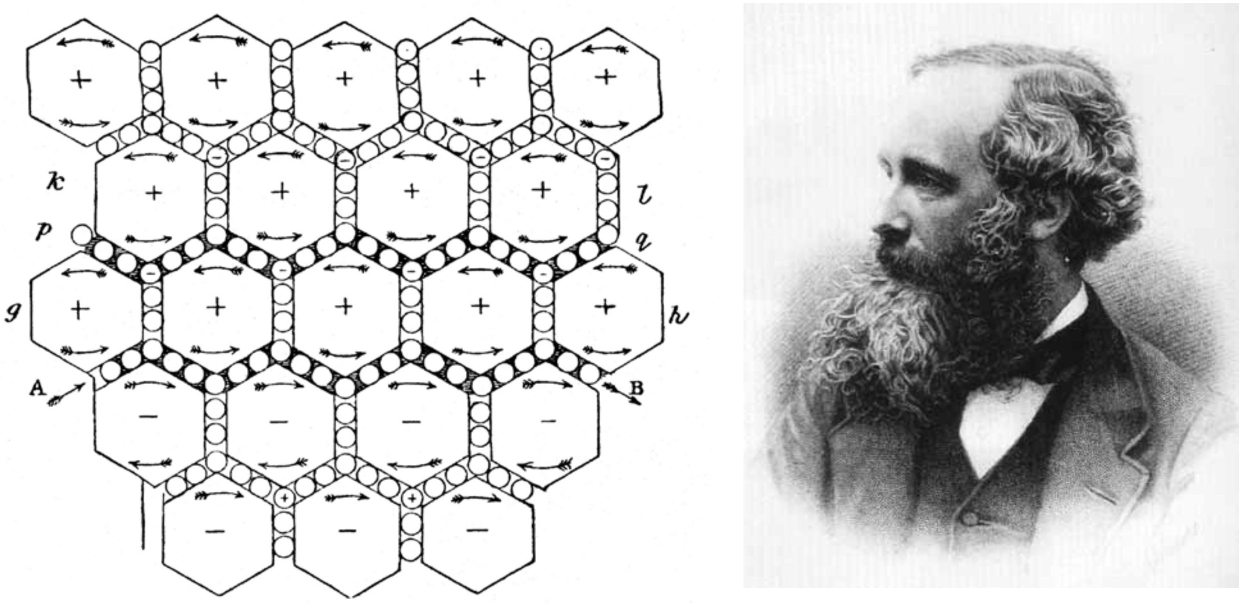

Figure 20-1. *Left:* J.C. Maxwell's image of electrical currents (from A to B in a material) generating magnetic fields. The diagram appeared in Part 2 of his series On physical lines of force, in 1861. In Part 4 he applies this model to the Faraday effect. *Right:* J.C. Maxwell (1831-1879).

the French fishing fleet (probably) in 1875, says that the quarry was closed and only one caretaker around, but he and his mates collected there a "quite considerable number of fragments of spar" (Revue des deux Mondes 11, p. 774).

In 1875 the government introduced a Bill in the Icelandic Parliament, proposing to sell the State's ¼ stake in Helgustadir. After some discussion, the Bill was rejected. A motion recommending purchase of the other ¾ was also rejected. In the same session, a member tabled a Bill to "ban all export of limestone, Iceland spar and raw materials for cement, as well as bones". This member, a medical man in fact, wanted all Iceland spar to be made into lime in order to provide the population with dwellings from more robust and healthy materials than turf and stones. He thought this to be preferable to Mr. Tulinius' "exporting it to England for the production of carbonated drinks". In the ensuing debate, the proposer claimed it was well known that the Helgustadir quarry had been pillaged by foreigners who had without permission collected there many tons or even shiploads of the rarest and best type of calcite. Also that "the French had once taken there 30-40 tons of the Iceland spar calcite, and distributed it to museums all over Europe". The Bill was not voted upon, but in Parliamentary debates in 1879 the same member again mentioned this or another French raid on the site which was supposed to have happened in 1832 according to his source, a mineral dealer in Copenhagen. These statements are probably exaggerated cf. the last couple of paragraphs of chapter 14 above, but É. Jardin says about the crystal outcrop in his 1866 travelogue from Iceland (published in 1874) that "…the scientific commission of La Recherche exploited it on a very large scale".

20 J.C. Maxwell's electromagnetic theory of light in the 1860's

J.C. Maxwell (Fig. 20-1) who had been acquainted with Nicol prisms and polarized light since his school days (section 15.3), studied at the Universities of Edinburgh and Cambridge where optics researchers like P. Kelland, J.D. Forbes and G.G. Stokes were teaching at the time. It may be assumed that he followed the discussions going on about the aether and its problems. Interest in these topics was heightened by the results of Faraday (1846a, cf. section 16.1) which demonstrated the influence of magnetic fields on light propagation in matter. Faraday's experiments were extended by Verdet (1854, 1856 and later) and others with improved precision, and Maxwell refers to these investigations in his works. Among other things, Verdet found that some paramagnetic materials such as iron salts rotated polarized light in a direction opposite to that of most diamagnetic substances.

Maxwell published in 1861-62 four papers with the common title "On physical lines of force" where he introduced new hypotheses about electrical and magnetic fields, including current loops in molecules (Fig. 20-1) which were originally proposed by Thomson (1856). In the third of these papers he points out that the a quantity obtained by W. Weber and R. Kohlrausch in 1857 from recent measurements of stationary fields had the dimensions of a velocity and a numerical value very similar to the speed of light. In that paper Maxwell (1862a) also mentions Iceland spar as an example of a material having anisotropic electrical susceptibility, and derives a formula for the torque acting on a spar sphere in an electrical field. In the fourth paper (Maxwell 1862b) which deals with the Faraday effect, he develops important ideas about the molecular currents.

Shortly thereafter, Maxwell (e.g. 1864) presented a revolutionary theory, treating light as a propagating wave of electrical and magnetic fields, rather than an elastic wave in the aether. Both the fields were transverse to the propagating direction (and at right angles to each other), which automatically explained the polarization property of light. Maxwell also derived Fresnel's equations for light waves in crystals, including their double refraction. In his description of certain phenomena relating to electrical charges and currents, he refers to his own measurements on viscous fluids (section 27.3) where he had probably used Nicol prisms. Maxwell's theory was however not greeted with much enthusiasm for the first 15-25 years. It was partially put forward in a rather complex mathematical form, and it was no more successful than the elastic-aether theory at explaining some puzzling effects of light. For instance, the books by Poincaré (1892) and Boussinesq (1903, vol. II, p. 267-625) still treat light as a transverse elastic wave.

21 Continuing research on Iceland spar, 1850-1900

In the general development of crystallography, things were happening in the latter half of the 19th century. Regarding geometrical crystallography, A. Bravais (e.g. 1851) published three major papers with various theoretical results on the symmetry of crystals and their division into classes. It is said that C. Jordan made use of these results when composing a fundamental work on one field within group theory in mathematics, appearing in 1868 (see D.S.B.). Many advances were also made in physical and chemical crystallography. These matters are beyond our present scope, but historical reviews may be found e.g. in Arzruni (1893), Jong and Stradner (1954-56) and Lima-de-Faria (1990).

The following four sections describe some research areas where calcite crystals played a part; in many cases they probably came from Iceland although their origin is not specified in the relevant publications. A specialized experiment not belonging in any of the sections concerns the origin of gravitational forces: it was thought by some that this force might have a kind of directionality, causing the pull of gravity from a crystalline material to vary depending on angle relative to its optical axis. This was tested carefully by Mackenzie (1895) with spheres of "optically perfect calc-spar", later by J.H. Poynting with quartz balls around 1900 and P.R. Heyl with various materials in 1924. No such effect was found, within experimental errors.

21.1 The crystal forms of calcite; fluid inclusions

The simple fundamental form of Iceland spar was important to scientists, which may have been one reason why crystals from Helgustadir were rarely included in studies on other crystalline forms of calcite. Perhaps also, C.D.Tulinius and other operators had the crystals trimmed before packing them for export. A great multitude of forms has been described from other notable calcite-crystal localities, such as Andreasberg in the Harz mountains of Germany (see Sansoni 1885), whereas Hessenberg (1866) says of the Icelandic material that "…of its actual crystal forms, we know next to nothing". Thus, only a few Icelandic cases are included in Zippe's (1852) comprehensive list of known forms of calcite, and none of its 93 illustrations show a specimen from here. Two crystals are shown in pl. XLV of Des Cloizeaux' (1862) book on mineralogy. Subsequent compilations were published by Irby (1878), Jeremejew (1898) and Goldschmidt (1913), but I have only seen abstracts of these works or references to them. The main detailed descriptions of Iceland spar crystals that I know of, are by Hessenberg (1866, 1872, 1874, Fig. 21-1). According to Rath (1867) and Purgold (1881) the Danish exhibit at an exposition in Paris 1867 included a giant crystal of Iceland spar, about two feet in size and one foot in thickness. Rath describes it briefly, but adds a comment on Iceland: "As is known, opportunities for seeing a well-developed

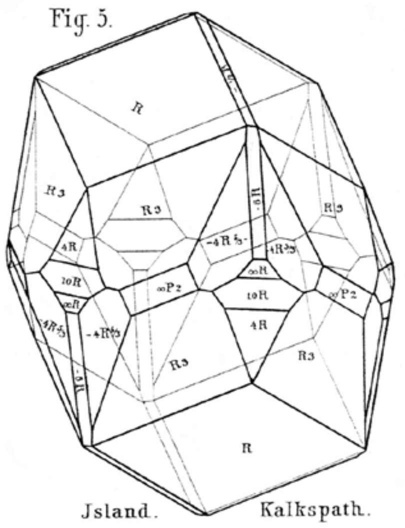

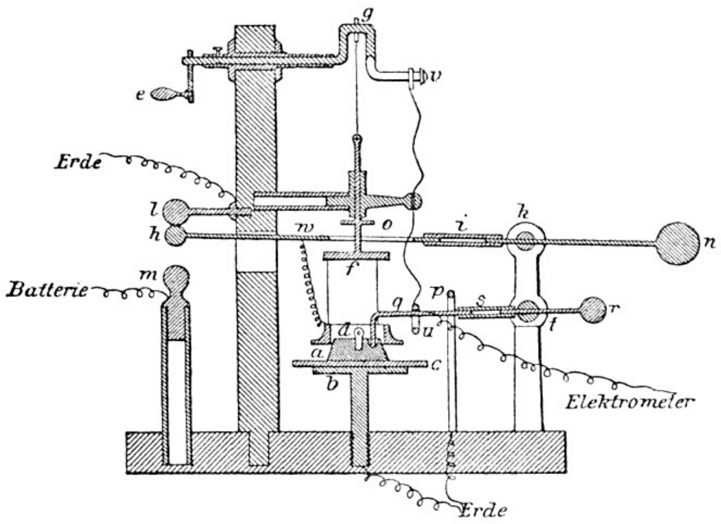

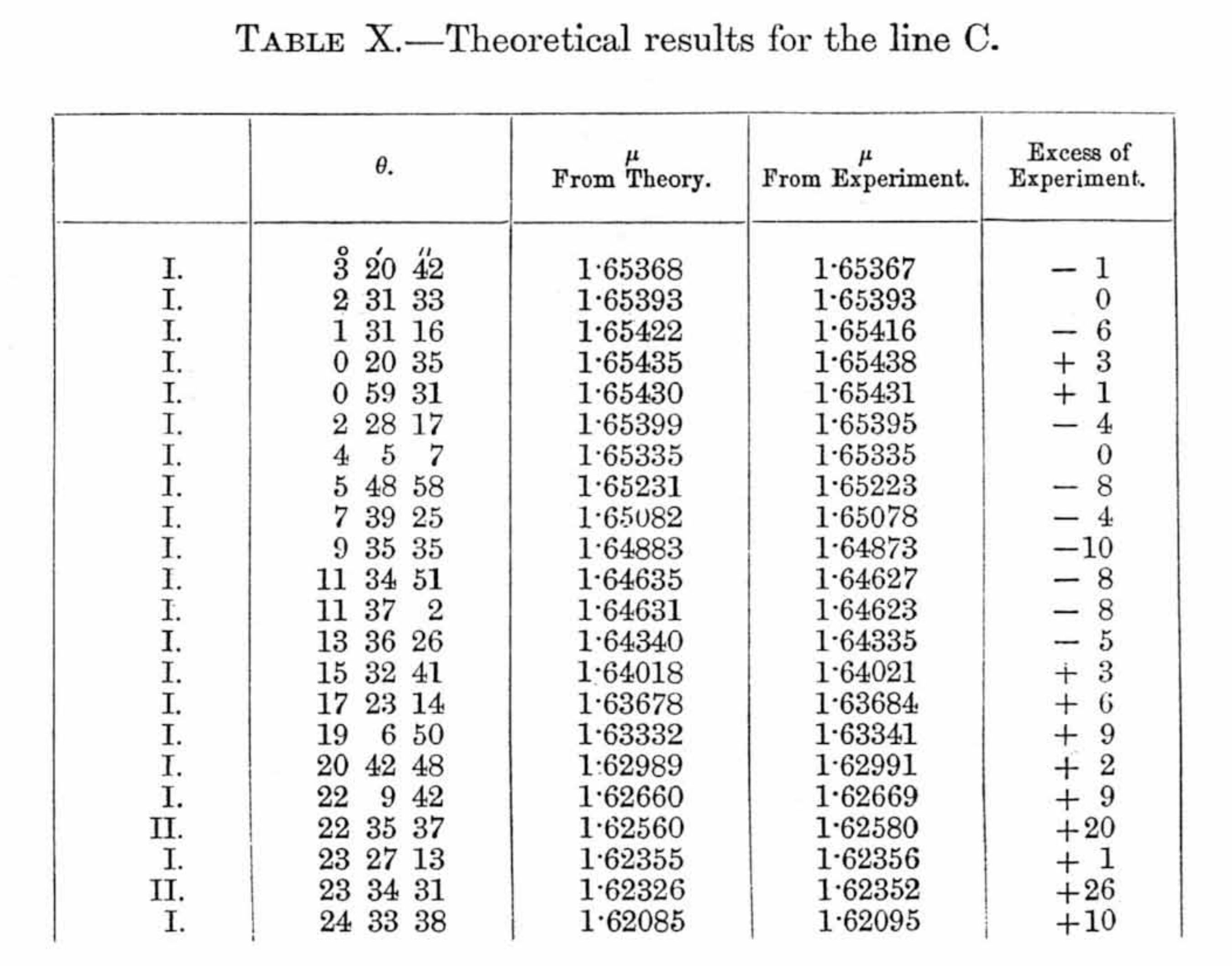

TABLE X.—Theoretical results for the line C.

	θ.	μ From Theory.	μ From Experiment.	Excess of Experiment.
I.	3° 20′ 42″	1·65368	1·65367	− 1
I.	2 31 33	1·65393	1·65393	0
I.	1 31 16	1·65422	1·65416	− 6
I.	0 20 35	1·65435	1·65438	+ 3
I.	0 59 31	1·65430	1·65431	+ 1
I.	2 28 17	1·65399	1·65395	− 4
I.	4 5 7	1·65335	1·65335	0
I.	5 48 58	1·65231	1·65223	− 8
I.	7 39 25	1·65082	1·65078	− 4
I.	9 35 35	1·64883	1·64873	−10
I.	11 34 51	1·64635	1·64627	− 8
I.	11 37 2	1·64631	1·64623	− 8
I.	13 36 26	1·64340	1·64335	− 5
I.	15 32 41	1·64018	1·64021	+ 3
I.	17 23 14	1·63678	1·63684	+ 6
I.	19 6 50	1·63332	1·63341	+ 9
I.	20 42 48	1·62989	1·62991	+ 2
I.	22 9 42	1·62660	1·62669	+ 9
II.	22 35 37	1·62560	1·62580	+20
I.	23 27 13	1·62355	1·62356	+ 1
II.	23 34 31	1·62326	1·62352	+26
I.	24 33 38	1·62085	1·62095	+10

Figure 21-1. Research on Iceland spar. *Top left:* Hessenberg's (1874) drawing of a crystal from Iceland, with indices based on precise measurement of angles. *Right:* Experiment by Rowland and Nichols (1881) on plates c of calcite and other crystals, to test certain predictions of J.C. Maxwell's theories regarding the electrical properties of insulators. *Below:* A table by Glazebrook (1880a) on the index of refraction of the extraordinary ray in Iceland spar. Measurements were made on four prisms I-IV at three wavelengths A, B and C from the spectrum of hydrogen, at various angles of incidence. The results agreed very well with the theories of Huygens and Fresnel.

crystal from there have been rare.". A comprehensive review of calcite crystal forms by Whitlock (1915) only refers to one of Hessenberg's specimens.

Scientists and collectors have from early on noticed that bubbles containing liquids are often present in the crystals of various minerals. In recent decades they have become the objects of detailed chemical studies, giving clues regarding conditions prevailing at the formation of the crystals. Such knowledge may also be of economic value, e.g. in prospecting for ores. Fluid inclusions do appear in Iceland spar (Brewster 1848b, Sang 1872-75) but I am not aware of any attempts to analyze them.

21.2 Electrical and thermal properties; optical dispersion

Pfaff (1858) and Fizeau (1862, 1866, with his recently developed interferometric method) measured very accurately the expansion coefficients and changes in refractive indices that occurred in Iceland spar and some other materials on heating. The latter related his results to the changes in shape of Iceland spar found earlier by Mitscherlich (1825, see chapter 11), and discussed possible relations between these changes. Pfaff (1861), Jannettaz (1873), Tuchschmid (1883, Fig. 21-2) and Lees (1893) improved upon Senarmont's (1848) measurements of the thermal conductivity of Iceland spar and other crystals; Jannettaz confirmed in a subsequent paper that this property also varied with direction in schistose metamorphic rocks. Le Chatelier (1893) measured the heat released when Iceland spar and aragonite were dissolved in acid, in order to find the difference in internal energy between them, but his results were inaccurate (Bäckström 1925).

Scientists were also interested in measuring the optical dispersion of materials. This increase of refractive index with frequency of the light follows a smooth curve which has fairly similar shape for all materials, and it was hoped that a simple physical model or mathematical formula could be found to fit the curve. For this purpose the relationship of the dispersion to double refraction was investigated thoroughly, see for instance measurements on (Icelandic) calcite carried out by Esselbach (1856), Mascart (1867) and Willigen (1869), and theoretical considerations by Challis (1863) and Carvallo (1890). Soundly based physical models of the causes of dispersion appeared after C. Christiansen had discovered so-called "anomalous dispersion" in the dye fuchsin in 1870. Then it was realized that the particles of matter might behave like damped harmonic oscillators, when Sellmeier (1872) presented formulas connecting the dispersion and absorption of light. The assumption that the aether-vibrations of light caused the constituent particles of materials to oscillate at the same frequency, was not entirely new; ideas of that kind had e.g. been suggested by Young (1802, p. 32-33). Theoretical equations (Ketteler 1874, Helmholtz 1875) based on this assumption could be fitted to the actual variation of refractive index with frequency, indeed much more closely than previous theoretical or complex empirical formulas (section 10.5) had done. As an example, Lommel (1881b) found that Helmholtz' formula with two adjustable parameters reproduced accurately Mascart's results on Iceland spar between 320 and 760 nm wavelengths. Sarasin (1882) measured the refractive indices of Iceland spar for visible and ultraviolet light. So did also Dufet (1891, 1893) who pointed out error sources in previous investigations, and compared the dispersion in spar with various theoretical formulas. The mechanism by which the light-waves exerted forces on the particles was however not clarified until after 1885-90, with recognition of J.C. Maxwell's electromagnetic theory.

Maxwell became professor of experimental physics in Cambridge 1871 and established there the renowned Cavendish Laboratory; previously, physics research at that University had mostly been of a theoretical nature. Dictionary of Scientific Biography (1980-90) notes that in this laboratory, great emphasis was placed on the quality and accuracy of measurements. One of four proj-

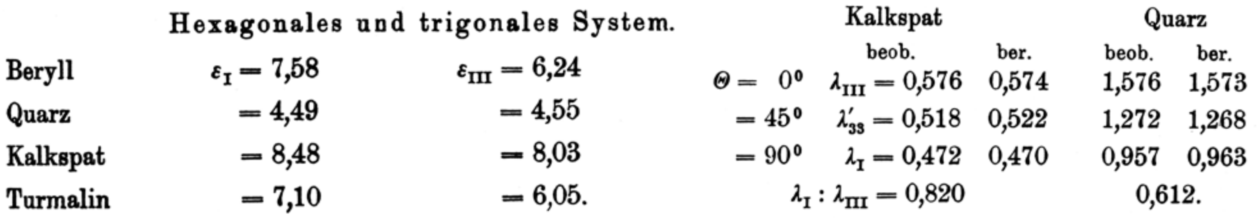

Hexagonales und trigonales System.		
Beryll	$\varepsilon_I = 7{,}58$	$\varepsilon_{III} = 6{,}24$
Quarz	$= 4{,}49$	$= 4{,}55$
Kalkspat	$= 8{,}48$	$= 8{,}03$
Turmalin	$= 7{,}10$	$= 6{,}05$.

	Kalkspat beob.	Kalkspat ber.	Quarz beob.	Quarz ber.
$\Theta = 0^\circ$	$\lambda_{III} = 0{,}576$	0,574	1,576	1,573
$= 45^\circ$	$\lambda'_{33} = 0{,}518$	0,522	1,272	1,268
$= 90^\circ$	$\lambda_I = 0{,}472$	0,470	0,957	0,963
	$\lambda_I : \lambda_{III} = 0{,}820$		0,612.	

Figure 21-2. Experimental evidence for anisotropy in physical properties of calcite and other crystals. *Left:* Curie's (1889) data on dielectric constants measured along the symmetry axis (III) and at right angles to it. *Right:* Tuchschmid's (1883) data on thermal conductivities of calcite and quartz. Tables from Voigt (1910).

ects from its early days that are mentioned explicitly in D.S.B., concerned a repetition of the study by Stokes (1872, section 17.2 above) on the refraction of the extraordinary ray in Iceland spar. Glazebrook (1880a) measured the refractive index at four wavelengths to five decimal places in four 60°- prisms for many different angles between the ray and the optical axis, and compared the results to the predictions of Huygens' hypothesis. See the lower part of Fig. 21-1.

Romich and Nowak (1874), Root (1876), and Rowland and Nichols (1881) made detailed series of measurements on the electrical properties of calcite with new equipment (Fig. 21-1; see Liebisch 1891, Chapter 6). These experiments were intended to test the theories of Maxwell and others on how these materials responded to time-varying electrical fields. Both Romich and Nowak (who worked in L. Boltzmann's laboratory), and Root also tested how these electrical properties depend on direction, and Boltzmann himself had just before this published a similar study on anisotropic sulfur crystals. Boltzmann claims (in Note 64, appended to his German translation of Maxwell's "Physical lines of force", 2nd edition, 1898) that the results increased significantly the credibility of Maxwell's electromagnetic theory of light. Boltzmann and Root, however, were aware of the fact that the effective electrical susceptibilities of materials may have much lower values in the case of light than in low-frequency electric fields. J. Curie (1889, Fig. 21-2) made some measurements on the electrical properties of calcite in connection with his more extensive work on quartz. Starke (1897) confirmed Curie‘s result that the dielectric properties of Iceland spar were anisotropic, the difference between its axial and transverse dielectric constants being of the order of 5%.

E. Becquerel (1885, 1886) resumed investigations on the luminescence of Iceland spar and other substances that he had been carrying out in the 1860, cf. section 17.3. He concluded from his experiments that it could be due to trace impurities of manganese, and this has been confirmed by modern techniques (see at the end of Appendix 2). It is of interest that Becquerel's son Henri carried on with similar studies in the 1890's (although not on Iceland spar), discovering radioactivity in 1896 when he was looking for connections between luminescence phenomena and W. Röntgen's X-rays.

21.3 Iceland spar and the permanent deformation and metamorphism of crystals

Brewster (e.g. 1848b) drew attention to spots or circles of light sometimes seen in Iceland spar and other crystals. The appearance of such spots had in fact been known for a long time, under the name of asterisms. Some papers on this topic were published after 1850 (Volger 1856, Kobell 1862, Haushofer 1865, Baumhauer 1869, and others) but they do not seem to have led to any notable findings. The asterisms may in many cases be related to so-called glide planes, cf. below.

Twinned crystals and thin twinned layers often present in minerals were originally thought to have been created only during the growth of the crystals from a solution. Around 1860, H.W.

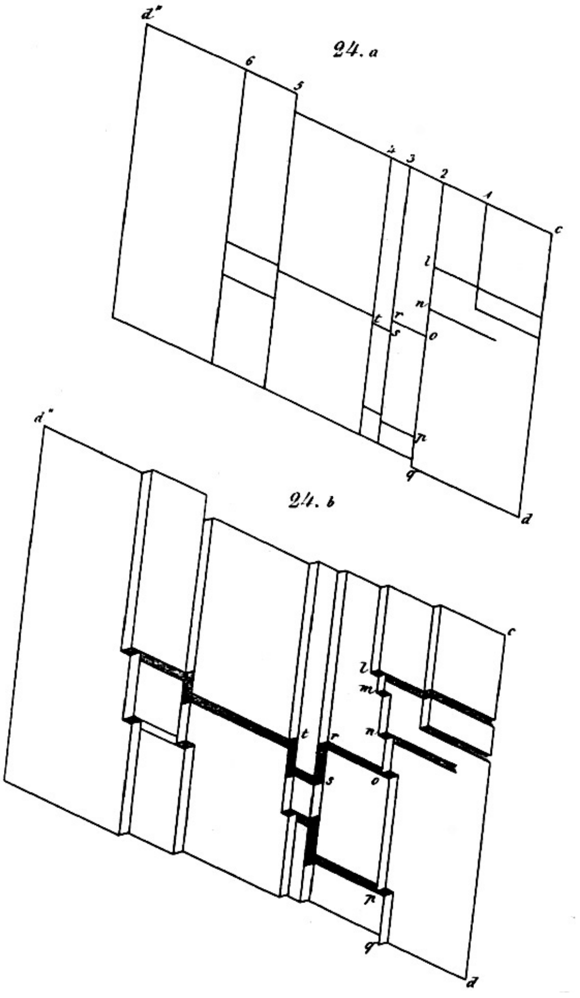

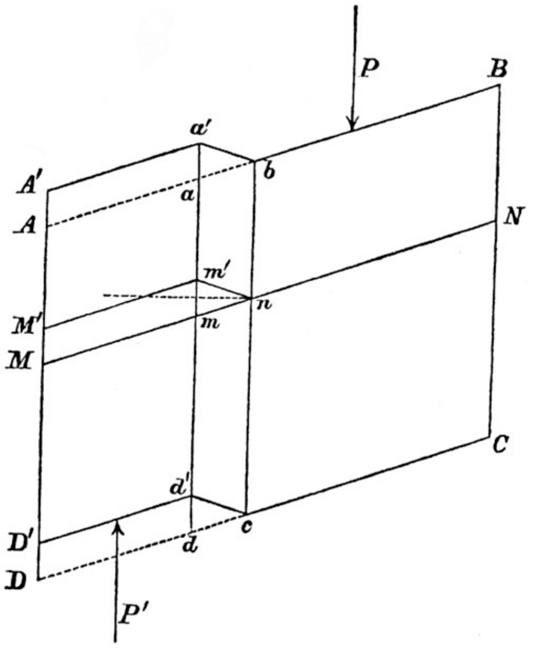

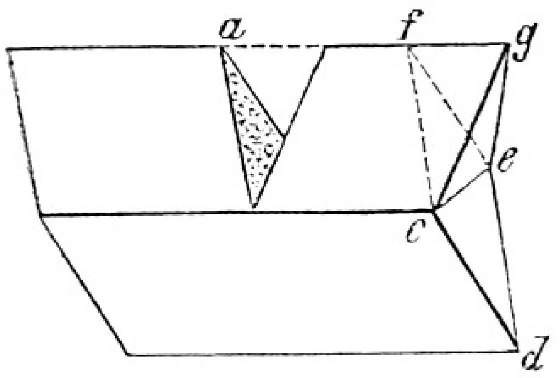

findet sich leicht:

$$
\begin{aligned}
\gamma_{14} &= -c_{12}cs + c_{13}cs + c_{14}(c^2 - s^2),\\
\gamma_{24} &= -c_{22}c^3s + c_{33}cs^3 + c_{44}2cs(c^2 - s^2)\\
&\quad + c_{23}cs(c^2 - s^2) + c_{24}c^2(c^2 - 3s^2) + c_{34}s^2(3c^2 - s^2),\\
\gamma_{34} &= -c_{22}cs^3 + c_{33}c^3s - c_{44}2cs(c^2 - s^2)\\
&\quad - c_{23}cs(c^2 - s^2) + c_{24}s^2(3c^2 - s^2) + c_{34}c^2(c^2 - 3s^2),\\
\gamma_{44} &= +c_{22}c^2s^2 + c_{33}c^2s^2 + c_{44}(c^2 - s^2)^2\\
&\quad - c_{23}2c^2s^2 - (c_{24} - c_{34})^2 cs(c^2 - s^2),\\
\gamma_{54} &= -c_{25}c^2s + c_{35}c^2s + c_{45}c(c^2 - s^2)\\
&\quad + c_{26}cs^2 - c_{36}cs^2 - c_{46}s(c^2 - s^2),\\
\gamma_{64} &= -c_{25}cs^2 + c_{35}cs^2 + c_{45}s(c^2 - s^2)\\
&\quad - c_{26}c^2s + c_{36}c^2s + c_{46}c(c^2 - s^2).
\end{aligned}
$$

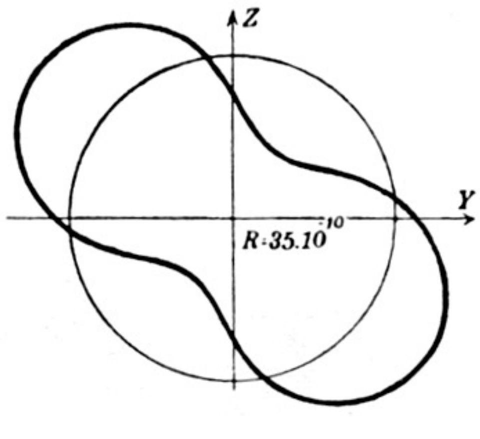

Figure 21-3. On the deformation of Iceland spar. *Top left:* Drawings from Rose (1868) where he shows twin lamellae on a cleavage surface of an Icelandic specimen. Elongated holes through the crystal occur where two of these lamellae intersect. *Right:* A diagram from Reusch (1867) illustrating the formation of glide planes and twinning due to shear produced by the applied pair of forces PP'. Voigt (1910, p. 951) calls this "one of the most remarkable discoveries in the entire field of crystal physics". *Center right:* Another well-known picture, indicating how Baumhauer (1878-79) created twinning in an Iceland spar crystal by simply pushing down on its edge at a with knife blade. *Bottom:* Formulas and a graph presented by Voigt (1889a) when processing experimental data of G. Baumgarten on the direction-dependent constants of elasticity in Iceland spar.

Dove and F. Pfaff suggested that twinning events might have taken place at subsequent times, due to the effects of pressure. Reusch (1866-67, 1867) demonstrated that it was easy to produce abundant twinning in Iceland spar, by squeezing plates of it in a vise (Fig. 21-3). This was described by Voigt (1910, p. 951) as "one of the most remarkable discoveries in the entire field of crystal physics", and it greatly influenced discussion on twinning in other materials. For instance, H. Laspeyres says in a paper on antimony crystals in 1870, that twins in them "…are totally reminescent of twins in calcite from Iceland, Auerbach etc.". Baumhauer (1878-79, 1883) made a surprising variation on Reusch's demonstration, simply producing a twinning plane by pushing on the edge of an Iceland spar crystal with a sharp knife (Fig. 21-3). Further experimental research on processes of this kind in calcite and various other materials (Partington 1952, p. 228) was carried out by e.g. Brezina (1880), Linck (1883) and Mügge (1898), including etch techniques (cf. section 28.1). Baumhauer‘s observation was also analysed by theoreticians from geometrical and physical points of view (Thomson 1888-89, Wallerant 1904, Johnsen 1915, and so on). Such mechanically produced twinning in crystals has been an active topic in crystallography up to the present day, with calcite remaining the type example (Wooster 1957, Boyko et al. 1994).

Slip- or glide planes (Gleitflächen) were described for the first time by Reusch in his samples of Iceland spar and other crystals which he had hammered on with a pointed chisel (see Scharff 1870). Rose (1868) wrote an extensive account on samples of Icelandic calcite which contained long hollow channels. The presence of such channels had already been noted by e.g. Brewster and by Volger in connection with their observations on asterisms just mentioned. Rose confirmed (Fig. 21-3) that the channels occurred where two glide planes intersected. These planes which may have directions different from those of easy cleavage planes or twin planes, were investigated in much detail in Iceland spar and other forms of calcite. See for instance Gümbel (1880), Purgold (1881), Mügge (1883), Lehmann (1886a), Cesaro (1890), Kenngott (1892), Voigt (1899), Wernadsky (1899), Friedel (1902) and papers referred to by them. Subsequently, inelastic deformation processes were studied in many crystalline materials: salts, ice, metals and their alloys, etc. For instance, the appearance of deformation twins in metallic tin was demonstrated in 1916. It goes without saying that this field of research has been of great importance in technology.

People gradually realized that the various types of twinning and permanent deformation of crystals can be classified on the basis of geometrical symmetry considerations. Thus, Liebisch (1887) pointed out that the strain effected in the earlier experiments of Reusch and Baumhauer, corresponds to what is known in elasticity theory as "simple shear". In the paper referred to above, Voigt (1899) states that if calcite is not too different from other materials "…then we may conclude that in all deformations of solid bodies, large intermolecular displacements are taking place". In geology, the above discoveries improved understanding of the changes in structure and shape of crystals occurring for instance in the tectonic folding of strata (see e.g. Adams and Nicolson 1901, Brauns 1903a, p. 388-389; Bauer 1904). More information on these and related matters may be found in the book by Groth (1905) who indeed states: "By far the most interesting and theoretically important phenomena are presented by calcite…", and in the review paper by Johnsen (1913).

Becker (1886) carried out heating experiments on Iceland spar, aragonite and other forms of calcium carbonate under pressure, in order to study their mutual transformations. From his own results and those of previous researchers like G. Rose and H. Debray in the 1860s, he drew various conclusions regarding the metamorphism of limestone.

Ordinary ice belongs to the hexagonal crystal system. Many studies of the growth and orientation of ice crystals by means of polarized light under various conditions were carried out in the late 19th century (e.g. Bertin 1866, Klocke 1879, Hagenbach 1882, 1890, McConnel and Kidd 1888, Mügge 1895) and subsequently (Quincke 1905, Tutton 1908, Engeln 1915, Matsuyama

1920, etc.). Bertin notes that D. Brewster did already in 1817 report significant observations on the crystal structure of ice, using polarized light. Evidence thus furnished has been essential to the understanding of processes taking place e.g. in snow, hailstones, firn, lake ice and sea ice. This applies also to deformations within glaciers and ice sheets, as the response of an ice crystal to shear stress is highly dependent on orientation (Tutton 1922).

21.4 Elastic properties and Iceland spar, 1870-90 and some earlier events

As mentioned in section 10.3 above, theoretical physicists already in the 1830s began debating how many independent elastic constants (Young's modulus, shear modulus, torsion modulus,….) were needed in each symmetry class of crystals, in order to fully describe their response to external pressures. These constants also entered into the character of wave motion such as sound or light in the crystals. Navier, Cauchy and Poisson had assumed in their analyses of the problem, that forces between neighboring material particles always were directed straight from one to the other. F.E. Neumann (1834, and later) however became convinced that this was not sufficient: one would also have to take oblique forces into account. He suggested experimental methods to test this matter, and such experiments were carried out by W. Voigt and other students of Neumann.

Baumgarten (1874) made very detailed measurements of the anisotropic elastic behavior of rods, cut accurately from crystals of Icelandic calcite with respect to its optical axis. Voigt (1889a, see Fig. 21-3) who processed and interpreted Baumgarten's data, states that calcite was the first crystalline material to be subjected to such studies. Voigt had in 1887-88 published results from his own measurements on the best crystals he could find from several other minerals. According to Timoshenko (1953, p. 248-249) and others, Voigt (1887, 1889b) correctly concluded that with certain simplifying assumptions 2 elastic constants are needed in glass, 3 in cubic crystals and an increasing number up to 21 in the least symmetric classes as Green (1842b) had indeed proposed. Iceland spar has 6 such constants, and quartz 7. In writings by Voigt on these matters around 1898, the word "tensor" appears for the first time in its current meaning as a very important concept in mathematical physics.

22 New instrumentation and new research, c. 1870-90

22.1 Prisms 1870-90

The development of Nicol prisms and apparatus containing them (and sometimes additional components from Iceland spar or other minerals) continued in the period 1870-90. Papers presenting novelties include those by Carl (1870, viewer for interference figures cf. Herschel‘s 1820 device of section 7.3), Bertin (1870), Cornu (1870, improvements on Jellett’s half-shade prism), Adams (1875), Bosanquet (1876), Lang (1881, dichroscope), Glazebrook (1883a), Bertrand (1884b), Ahrens (1884), Sorby (1885), Madan (1885) and Thompson (1886). See Fig. 12-1. Especially worth mentioning is the description by P. Glan (1880) of the improved Nicol prism which (in various versions, Fig. 12-1) has been very popular in the last several decades. In the Glan prism the ray that is going to be used travels straight through the prism, whereas it suffered a lateral shift in the original Nicol prism. In the Glan prism, the ray is also closer to being completely polarized all over the field of view, less of the light is reflected away, and the prism is shorter than the original Nicol prism for the same field of view.

The main types of polarizing prisms from Iceland spar are reviewed by Feussner (1884) and by Grosse (1890). The former paper also describes prisms intended to economize as much as possible on the spar material, cf. chapter 33 below. Discussion of the development of polarization photometers and some related equipment will be deferred to sections 29.4-29.7. A different kind of application of Iceland spar may also be mentioned here (although not a commercial success), as it was invented by C.D. Ahrens who later became a very skilled maker of Nicol prisms. The invention (Ahrens 1871, Turner 1989, p. 327) consisted in replacing the glass prisms of binocular microscopes with a small specially cut double-image spar prism.

22.2 Polarimeters in research and industry, c. 1870-1900

In 1870-1900, a very large amount of data was collected on the optical activity of organic compounds. They included acids, alcohols, esters, oils, sugar- and starch- products, bile constituents, proteins, alkaloids, glycosides etc., and derivatives of some of these. The book by Landolt (1898; its first edition appeared in 1879) contains a list of over 700 active compounds, and vol. 3 of Dufet‘s (1900) book lists of the order of 2000. In some cases detailed results are given regarding different solvents, solute concentration, and temperature. Books on techniques in polarimetry and other applications of polarized light were also published (e.g. Errera 1891, Sidersky 1895, Pellat 1896). Measurements of optical rotations were of considerable use in physical chemistry, organic chemistry, and general biochemistry, as well as in chemical industries where active compounds were produced from raw materials, synthesized, or used in manufacturing processes (see e.g. Jeancard and Satie 1901 on essential oils). Below, some areas where optical activity played a significant part in progress, will be highlighted.

One example concerns alkaloids from plants that were mentioned in section 18.1; polarimeters found various applications in research on these. A.C. Oudemans, O. Hesse and others measured the optical activity of a great number of both previously known and new alkaloids in the above period (e.g., Hesse 1876, 1894, Oudemans 1878, Berend 1897; see also the compilation of Landolt 1898, p. 583-620). Tanret (1879) claimed that he had found two alkaloids in ergot, a poisonous fungal growth on rye and related plants. These were distinguished by their very high optical rotation values, being respectively over three times and over six times that of glucose. Grimaux (1881) confirmed by polarimetric measurements and other means, that codeine which he had prepared from morphine by adding a methyl group, was identical to the natural product. This became a key point in the manufacturing of codeine and related chemicals. Antrick (1887) described a useful method to test the purity of cocaine samples. The first alkaloid for which a complete laboratory synthesis was effected and verified by polarimetry, was the poison coniine from hemlock (Ladenburg 1886). Polarimetry and microscope observations later contributed to the discovery of at least four other alkaloids in hemlock and to understanding of their relationships (Wolffenstein 1894, Ladenburg 1906). Santonin is a substance of a type sometimes included with alkaloids and glycosides in a category called Bitterstoffe in German literature. This compound which was formerly used as a remedy for intestinal worms, is obtained from the appropriately named wormwood (Artemisia). Santonin and various of its derivatives, some of which had exceptionally high optical rotations, were studied by Nasini (1882) and his collaborators.

Another example relates to research on the terpene and camphor (or: alicyclic) group of compounds; tens of thousands of these are now known. Among the simpler ones (monoterpenes, containing a basic structure of 10 carbon atoms) are substances from flowers, fruits, vegetables, seeds, roots, pine needles, wood resins etc. that are commonly used in perfumes, soaps, ointments, cosmetics, flavoring (e.g. peppermint in sweets), antiseptics, and medicines. “The camphor series is one of the most interesting ones in organic chemistry”, says the noted chemist M. Berthelot in an 1891 paper. Among those contributing to the field were E. Beckmann (e.g., 1889), H. Landolt, A. Haller (e.g., 1892) and F. Tiemann (1897, and many others); they also studied different groups of chemicals. Some of these compounds, or their derivatives, are optically active. Producers, traders, scientists and industrial staff could then use polarimeters for instance to test their purity, cf. section 27.9. It was often found that compounds of different origins which had been given different names (even up to 20!) were in fact identical. It was especially the research of O. Wallach and his collaborators (e.g. Wallach 1888, Wallach and Conrady 1889, Wallach 1891) that increased our knowledge of the constitution of the terpenes and camphors, see Appendix 5. G. Bouchardat also made significant discoveries in that field, often with the aid of optical activity measurements. His discoveries included simple methods to converting terpenes like $C_{10}H_{16}$ to valuable alcohols and esters (e.g. Bouchardat and Lafont 1886, Bouchardat and Tardy 1895).

Furthermore, polarimetric measurements were employed by the major dealers in essential (volatile) oils, to identify the several different components present in each of the hundreds of oils on the market (e.g. Schimmel 1893, Gerber 1896) and to detect adulterations. From the 1890s onwards, all this knowledge increasingly became the basis of production of such compounds by synthesis in factories, on a much larger scale than was previously possible. Prices could be reduced, even hundredfold or more: as an example, one pound of genuine French rose essence required processing of 8-10 thousand pounds of rose flowers (Moniteur Scientif. 90, 1923, p. 54). The composition of the factory products could be controlled, while for instance that of plant oils will vary depending on soils, weather conditions and collection methods (Landolt 1898, p. 578-583); they may also contain impurities which spoil their desired effects (cf. O. Wallach's Nobel lecture, 1910). The rise of factory methods obviously had an economical impact on makers of these products from natural sources. Many rural industries such as those making vanilla and oils from roses, peppermint, eucalyptus, orange peel, etc. have however adapted to the competition. More in section 29.2.

One more example from a related field concerns the synthetic production of vanillin, $C_8H_8O_3$. This aldehyde (which is not optically active) gives vanilla, which is found in certain plant pods, most of its characteristic smell and flavor. The above- mentioned F. Tiemann and W. Haarmann (1874) found that by oxidation, the optically active chemical coniferin which is obtainable in quantity from pinewood, becomes an active combination of vanillic acid and glucose (Tiemann 1885). After removal of the glucose, the purified acid could be converted to vanillin. Haarmann patented the process and set up a factory in his home town to synthesize vanillin, starting in 1874. It may be assumed that polarimeters were involved at some stages in this discovery and in the production process. Alternative ways of synthesizing vanillin, mainly from eugenol (oil of cloves), were introduced later. Tiemann and Haarmann continued their collaboration in developing additional essences, one being the optically active ionone which mimics the scent of violets. The firm of Haarmann & Reimer is still the largest supplier of such compounds in Germany.

The method employed by L. Pasteur, letting microorganisms separate the right-handed and left-handed tartaric acid enantiomers from a solution of both, was not tested again for the next two decades. However, interest in the method increased when it had been applied to amyl alcohol (Le Bel 1878) and to amino acids (Schulze and Bosshard 1886, Schulze and Likiernik 1893). Scientists tested the resolving ability of different kinds of microbes on many pure racemic carbohydrates under different conditions, with somewhat variable results. McKenzie and Harden (1903) and Werner (1904, p. 63-64) list more than 30 compounds that had been resolved in this way, using for instance the mould Penicillium glaucum. Left-handed and right-handed compounds had generally been expected to have identical effects upon higher animals that ingested them. However, after Piutti (1886) noticed that the two isomers of asparagine tasted differently, many aspects of this matter were investigated. It turned out to be quite complex, cf. e.g. Fischer (1898-99), and a review in Stewart (1919, p. 243-256), but striking contrasts between the antipodes were sometimes noted. One example is the hormone adrenalin, first isolated in pure form in 1901. After successful separation of a synthetic racemic product into its d- and l-versions (Flächer 1908), the effect of the natural l-adrenalin on blood pressure in test animals was found to be at least 15 times greater than that of d-adrenalin. See the book by Cushny (1926) who himself wrote several papers on the unequal physiological effects of antipodal alkaloids in 1903-21. This matter continues to be of great scientific and economic importance, especially for the pharmaceutical industry (cf. Chemical and Engineering News 78 no. 43, 2000) as a result of the 1960s thalidomide tragedy. A paragraph on progress in resolution methods appears in section 27.4.

In connection with the biological resolution of optically inactive racemic compounds into their two antipodal constituents, we may recall that lactic acid in the 1870s played a key role in the history of discoveries regarding three-dimensional carbon bonds. The generation and the properties of this acid are also important for the dairy industry and in various other industrial processes. Sour milk contains the two lactic acids in equal amounts or nearly so, as a result of the simultaneous fermenting activity of several strains of bacteria. However, observations by Nencki and Sieber (1889) and Schardinger (1890) indicated that each strain makes solely a right-handed or a left-handed acid. In the following couple of decades, this was confirmed in the case of lactic acid (Heinemann 1907, Currie 1911) and the related glyceric acid (Frankland 1892). Concurrently, interest in Pasteur‘s (1853) chemical method of resolution was enhanced by Purdie and Walker‘s

(1892) successful separation of the right- and left-handed portions of inactive lactic acid with the aid of strychnine. See e.g. a list (Werner 1904, p. 66-68) of about 80 compounds, mostly acids resolved after reacting with alkaloids or alkaloids resolved with active organic acids. This was followed up by e.g. Frankland and Done (1905), Buchner and Heide (1905), and Irvine (1906).

Camphor is a general name for a resin from certain species of trees. In particular, two tropical trees produce slightly different varieties. The main type is Japan-camphor $C_{10}H_{16}O$ originating mostly from Japan and Formosa (now Taiwan). Borneo-camphor or borneol $C_{10}H_{18}O$ can be easily converted to Japan-camphor by oxidation. Both may be dissolved in organic solvents and are then optically active, also the less common isoborneol. This optical property greatly aided in studies on camphor, its relatives and derivatives (e.g. Riban 1875) in continuation of the pioneering work by M. Berthelot and others in the 1850s mentioned in section 18.1 above. Four competing suggestions for the structure of the camphor molecule were put forward in 1893-98. Within a few years, it was determined which of them was the correct one (e.g., Haller 1896, Aschan 1901). Camphor and related compounds were mostly marketed as raw materials for various medical products, but after 1875 it acquired a new role as one of the two major constituents of celluloid. Into the early 20th century, celluloid was incorporated into many household objects and toys, replacing for instance ivory, mother-of-pearl, hardwood, and horn. Celluloid also was used in varnishes, photographic films (invented by G. Eastman in 1888), and all movie films after the movie industry took off around 1895. Celluloid's main advantage in photography, compared to the older glass-plate techniques, was of course the facility with which it could be wound on reels. In the production of celluloid "…the simple determination of camphor in solution by means of its optical activity… was of considerable importance" according to Landolt (1898, p. 452), as this was for a long time the main method for such measurements (e.g., Förster 1890).

When the 1904-05 war between Russia and Japan had created a shortage of camphor for many years and steadily increasing prices, it was to some extent produced synthetically from the optically active pinene, which is the chief constituent of turpentine from pine trees and is therefore inexpensive. A few different methods were available for this synthesis, based on chemical knowledge which had been partly acquired through polarimetric measurements (e.g. Bertram and Walbaum 1894). The factory production of camphor did not become profitable until after 1910, but it continued at least into the 1920s (Chemical News vol. 124, p. 73 and 144, 1922). By then, other substances had been found which could replace camphor in making celluloid. Celluloid eventually lost out to new man-made materials such as cellulose acetates (section 27.4) and bakelite, for reasons including its high price, disagreeable odor, and flammability.

Many people including Long (1893), Valenta (1906) and Adams (1915) discussed the surprisingly large variations found in the composition of turpentine from conifer trees in different locations. Herty (1908) claims that none of these properties "has proved of more interest than its optical rotation". Research into the matter was of economic value, as turpentine and its oxidation products, resins etc. were by then extensively used in industry, especially in the production of paints, varnishes and camphor. Turpentine from French trees had for instance proved to be a better raw material for the manufacture of synthetic camphor than that from American trees (Haller 1909). In a thorough study of the anomalous rotatory dispersion of turpentine, Darmois (1911, cf. Vèzes 1921) demonstrated that the observed variations were partly due to the presence in turpentine of two isomers of its major constituent (pinene). Several changes could also occur in the turpentine during its distillation from the wood, including conversion of the β-isomer into the α-isomer which was in fact the more suitable one for camphor production.

Although it now sounds odd, discussions took place until around 1900 as to whether crude petroleum originated from organic remains or was generated inorganically, for instance from carbide compounds in the Earth's crust (Walden 1900, p. 198; Neuberg 1908; Stewart 1919, p. 244, and

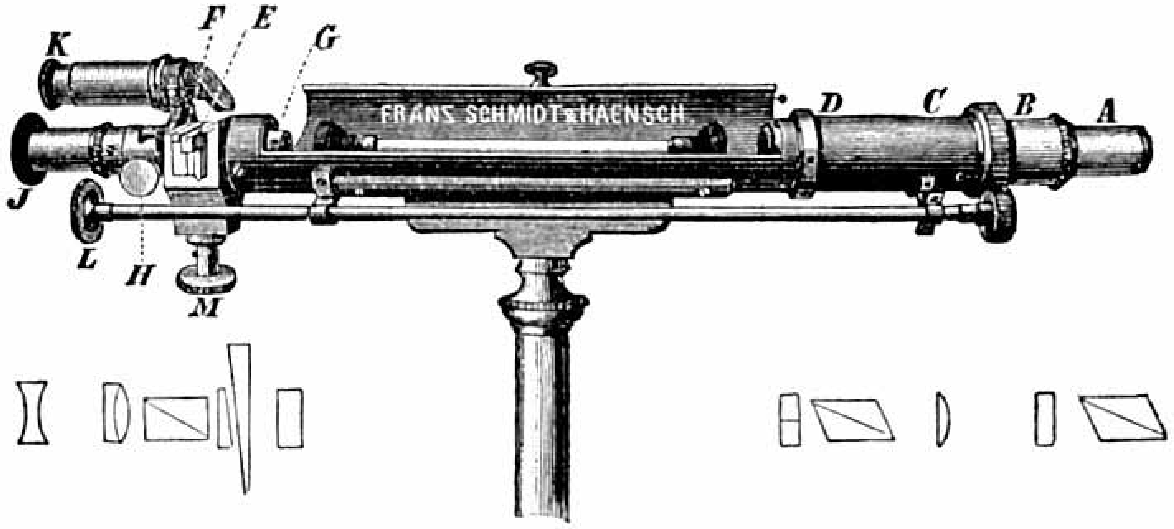

FIG. 22. — SOLEIL-VENTZKE-SCHEIBLER TRANSITION-TINT SACCHARIMETER.

A. Shows position of Nicol of tint producer.
B. Position of quartz plate of tint producer.
C. Position of polarizer.
D. Position of transition-tint plate.
F, E, G. Quartz-wedge compensator.
H. Adjustment device of analyzer.
J. Eyepiece.
K. Reading-glass of scale.
L. Pinion for setting sensitive-tint producer.
M. Pinion for moving wedge.

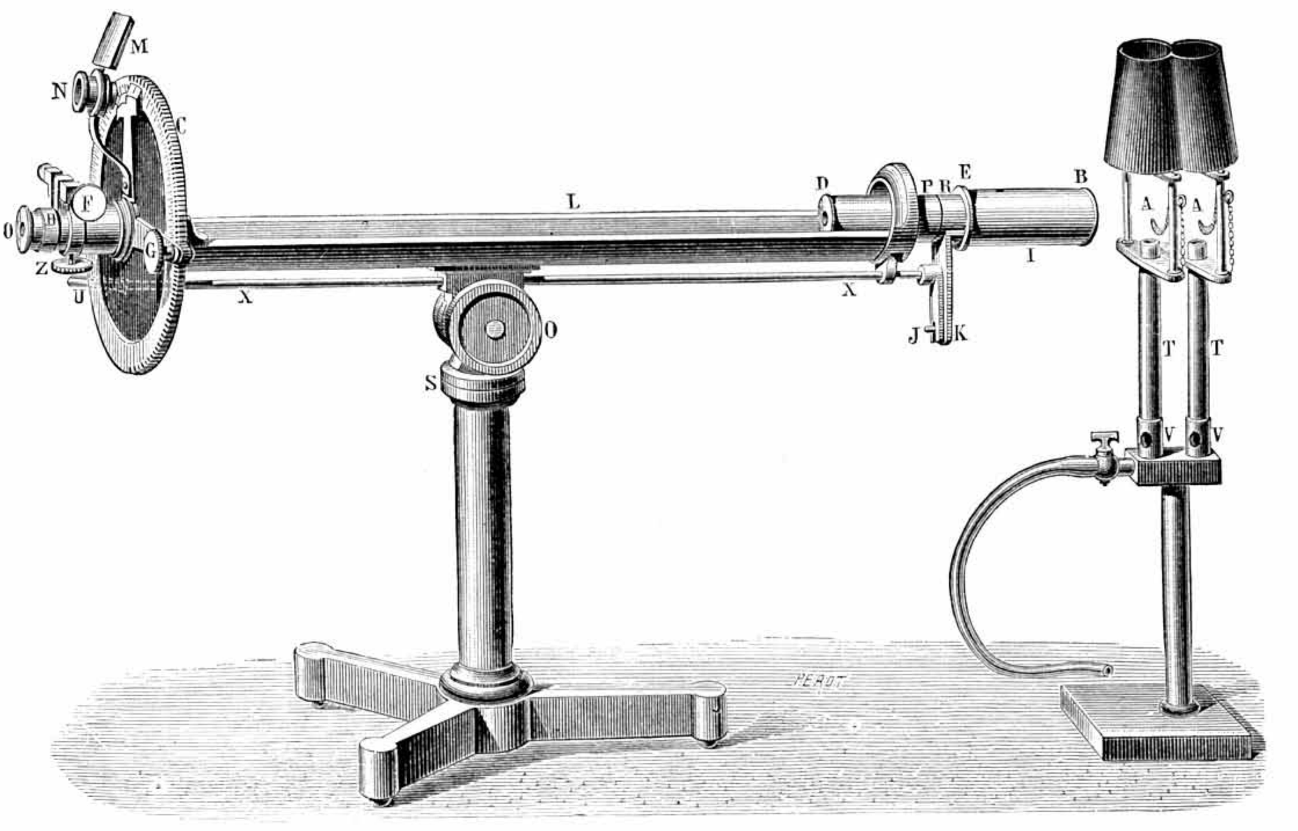

Figure 22-1. *Top:* A type of saccharimeter improved by C. Scheibler around 1870, with three Nicol prisms. The liquid specimen is in a glass tube underneath the manufacturer's name. Instead of rotating the analysing prism, the observer moves the large quartz wedge in or out to compensate for the rotation imparted to the light beam by the liquid. From Rolfe (1905). *Bottom:* The half-shade polarimeter of Laurent (1874, 1879) for monochromatic light, which was popular in the sugar industry for decades. From Sidersky (1895).

many others). The matter was settled when it was found that petroleum from some locations had a slight optical activity, as all known optically active chemicals were organic. On the other hand, L. Pasteur had expected that optical activity was exclusively a property of the living world, and that no active materials could be totally produced in the laboratory out of inorganic ingredients. However, Jungfleisch (1873) managed to extend the work of Perkin and Duppa (1861) by synthesizing racemic tartaric acid from ethylene gas. His success raised expectations that further methods could be found to make active compounds, possibly with the assistance of physical means such as magnetic fields (see e.g. Landolt 1898, p. 110-111). It also encouraged other chemists to take up research in stereochemistry (Walden 1900).

As regards the development of experimental methods, we may mention that a saccharimeter based on J.B. Biot´s design which had been improved by Ventzke (1842, 1843) and by J.B. Soleil (1847), was improved further by C. Scheibler (1870). With additions from the workshops of Schmidt & Haensch (Fig. 22-1) it became one of the most common types in use. A more complex version appears in Glan (1891). Laurent (1874, 1879) and others developed the half-shadow method of Jellett and Cornu (from Fig. 18-1) in polaristrobometers, while Laurent (1876) also experimented with a double-image prism polarizer. Duboscq (1885) claims having constructed a half-shadow saccharimeter in 1872, whereas Pellin (1899) and Bruhat (1930, p. 109) consider Prazmowski (1873) to have been the first to describe such an instrument for white light. After detailed tests (e.g. Luynes and Girard 1875), laws and regulations were issued making the use of selected polarimeter designs mandatory in the French sugar industry and Customs, including seven official sugar-testing stations for the domestic production and five at import harbors (Girard 1877). These designs remained popular for a long time: Laurent sold 350 units of his 1874 saccharimeter model in 1874-79 (Luynes 1879) and altogether 1250 units in the period 1875-86 (Brenni 1996). Poynting (1880) suggested a simplification of the Laurent apparatus, and Laurent (1882) announced a new polarimeter using ordinary white light instead of a sodium flame. The manufacturers also introduced various novelties such as a half-shade arrangement with two concentric circles instead of two adjacent semi-circles (from about 1896, cf. Pellin 1903). Small inexpensive vertical-tube polarimeter units for routine measurements were offered for at least a decade around 1880 (Wasserlein 1882, Trannin 1884), in some cases as optional accessories for mounting within polarizing microscopes (cf. Kaiser 1896).

The continuing demand for saccharimeters may be appreciated from the fact that in 1892 there were 400 beet-sugar factories in Germany (as well as some 40 refineries), and over 1000 in other countries on the Continent. In addition to the production, trading, taxation and use of sugar (see e.g. Dubrunfaut 1870), saccharimetry was important in brewing (Gayon and Dupetit 1886, Heron 1888, Effront 1897) and winemaking (Bauer 1891), processing of starch (Brown et al. 1897), and research in the food- and pharmaceutical industries (Rolfe 1905). In the British Empire, the use of polarimeters in the sugar industry began later than in continental Europe, but according to Lock et al. (1882, p. 550) the determination of sucrose (crystallizable sugar) “is now universally made by means of the polarising saccharometer”. Judging from serial numbers, Schmidt & Haensch appear to have delivered 3200 instruments by 1892 (Rolfe 1905, p. 47) and over 8000 by c. 1911 (Kauffman 1975). For the sugar industry and other applications, the specific optical rotation of aqueous sucrose solutions for the yellow sodium light had to be accurately known as a function of concentration. Painstaking studies on this matter by Tollens (1877) and others are quoted by Landolt (1898). In contrast to some other sugars and especially fructose, temperature effects on the rotation of sucrose are so small (Schönrock 1900) that they could often be neglected.

The most common glass sample tubes were 20 cm in length, but specialized instruments could accommodate other containers, from 5 cm (for strongly rotating or colored solutions) up to 1 m long or more. Polarimeters dedicated to measuring glucose in diabetic urine also appeared (e.g., Yvon and Duboscq 1880, Fleischl 1885, Duboscq 1885, Ultzmann 1886, Pellin 1899). They were widely used well into the 20th century (Struers 1925), some pocket-size instruments even past 1950. Due to interfering factors in all methods available for such measurements, an international congress in Berlin in 1903 recommended that urine samples should be measured both optically and chemically.

Lippich (1882, 1885; Landolt 1883) invented a new half-shadow arrangement by placing a small extra Nicol prism in the light path on one side of polarimeters; see more on this version in section 29.2 below. On the whole, such instruments where the relative brightness of parts of the observer's field of view was varied, had reached a dominating position around 1895, both in polarimeters and quartz-wedge saccharimeters (Landolt 1898, cf. Sidersky 1895 and Rolfe 1905). By that time the older variable-tint devices developed by Biot, Robiquet, Ventzke and others were not competitive in research and industrial applications because they caused fatigue, were bothersome in the case of colored liquids, and could not be used at all by color-blind observers. They were however inexpensive and suitable e.g. for educational purposes. Wild’s polarimeter which displayed monochromatic interference fringes rather than two semicircular fields (see section 18.1), was manufactured from c. 1868 (see Wild 1870; Landolt 1873, 1876) in two versions, large and small. The accuracy of Wild's instruments was in the beginning quite impressive, but they did not keep up with the gradual advances in the half-shade devices just described. Users complained about eye strain (cf. Cornu 1870, Schmidt & Haensch 1896), and Wild's (1898) late attempt to improve his design was not a commercial success. Production ceased some time between 1905 and 1920 (Browne 1912, Schulz and Gleichen 1919, Kessler 1926).

Equipment containing Nicol and Wollaston prisms was designed for measuring the proportion of polarized light to unpolarized (Pickering 1873-74, Cornu 1882, 1890), for instance in a reflected ray or light from the sky. Cornu also suggested that his “photo-polarimeter” might be used in observations of the state of the atmosphere, to aid in weather forecasting. Cornu's device was later produced commercially (section 27.1), as well as one by Becquerel (1880a) with a Savart-plate polariscope to study the polarization of skylight. Pickering (1886) who will be reappearing in section 29.6, invented another polarization meter with an Iceland spar plate for use in meteorological and astronomical research, but it was forgotten for half a century.

Research on glucose in urine continued, see for instance Minkowski (1884) and Worm-Müller (1885). The former demonstrated, partly with the aid of a polarimeter, that the optically active oxybutyric acid is excreted in diabetes. Improved procedures for measuring its concentration were described by Magnus-Levy (1901) and others. It was one of the materials that had been causing discrepancies between the results of polarimetry and alternative methods for estimating urinary sugar content. Studies on dogs (Mering and Minkowski 1890) which also involved polarimetry, established the key role of the pancreas gland in the metabolism of sugars and other nutrients. Mayer and Neuberg (1900) proved that glucuronic acid is found in normal urine. Neuberg and Neimann (1905) later carried out further research on the properties of this optically active acid, which has important functions in animal metabolism.

The existence of the disaccharide maltose which had been announced by Dubrunfaut in 1847 (section 13.2), was confirmed by O’Sullivan (1872, etc.) in his research on the products resulting from the action of malt extract on starch. Both he and Meissl (1882) who showed maltose to be composed of two glucose molecules (minus water), depended to a considerable extent on measurements of optical activity. Maltose is the chief building block both of starch from the vegetable kingdom and of related polysaccharides such as glycogen (section 18.1) from both animals and plants. Details of the complex breakdown of these to dextrins, maltose and further to glucose by the action of acids or enzymes were later investigated by many scientists (see below).

Tens of different alcohols may be obtained by reduction of the corresponding ketose sugars having 4 to 10 carbon atoms, and some are found in the animal or vegetable kingdoms. These as well as their derivatives were studied by polarimetry in 1870-1900 by E. Fischer and many others (see books by Landolt 1898, Browne 1912, p. 755-772, and Pringsheim 1925, p. 46-53). In cases where the optical rotation values of alcohols are small, Vignon (1874) found that they can be greatly increased by the addition of borax. Among the simpler alcohols are erythritol (Bertrand 1900), xylitol (inactive), mannitol (Müntz and Aubin 1877), sorbitol (Bertrand 1898), and perseitol. Some have modern applications, for instance in food items, cosmetics, and medicines. The borax method was in use to at least 1930 (Raistrick and Young 1931). There are of course also other optically active alcohols, such as amyl alcohol whose activity was described already by L. Pasteur in 1855; his research was followed up by Le Bel (1873, 1878) and Walden (1894).

An optically inactive isomer of inositol (a sixfold alcohol derived from benzene C_6H_6 or cyclohexan, C_6H_{12}) was originally isolated from muscles in the early 1850s. Active alcohols called pinite (Berthelot 1856), dambosite, sennite, matézite and other names which were found to occur in various plants (e.g. Wiley 1891), turned out to be methylated inositol. From these, active isomers of inositol can be prepared (see Maquenne 1887, 1891, 1900, p. 189-230, Tollens 1898, p. 259-264, Werner 1904, p. 132). The optical activity is in that case due to an asymmetry of the inositol molecule as a whole (Stewart 1919, p. 75; Wittig 1930, p. 94-95), rather than to a mirror-image symmetry around any single carbon atom. The original muscle-inositol and phosphates based on it have a number of important functions in animal and vegetable tissues.

Optically active organic acids have equally been of value in research and industry. Many are found in Nature, for instance the bile acids which were studied by Hoppe (1858) along with their decomposition products. Dozens of acids may also be obtained by laboratory oxidation of sugars or alcohols, as was well known by the turn of the century (Maquenne 1900). Several of them appear frequently in the literature on optical activity in the decades around 1900: lactic acid, the amino acids (alanine, aspartic acid, cystine,...), malic acid, tartaric acid, oxybutyric acid and glucuronic acid (all mentioned elsewhere in this report), saccharic acid, mandelic acid, valeric acid (Erlenmeyer and Hell 1871), etc. Topics of wide interest included finding these acids in different plants or animals, synthesizing them and their derivatives (such as esters, Hedenburg 1915), resolving racemic mixtures (Glattfeld and Miller 1920), measuring rotatory dispersion, and transforming one acid into another.

In research on metabolic processes in humans and animals, as well as in the medical treatment of a range of health problems such as diabetes, measurements of the concentration of glucose in blood are important. However, this concentration is very low and other substances in the blood interfered with the various methods employed. Polarimetry was employed for this purpose through the 1910s at least, although not extensively compared to chemical methods (Stepp 1919). The interpretation of results caused much debate for decades (see e.g. discussions on the conclusions by C. Bernard and others in J. Pharm. 29, 500-506, 1879; Oppler 1910, Bang 1913). As an example, it was suggested by some that maltose sugar was present in blood (Lépine 1911); according to others, the glucose in blood and the digestive system might be chemically bound to other compounds (Michaelis and Rona 1908). Attempts were also made to measure the glucose content in bird eggs (Mörner 1912).

In addition to the glucose measurements on urine and blood just mentioned, polarimeters were around 1870 becoming useful tools in other physiological and medical research. The observations by A. Béchamp on albumins which have already been referred to in section 18.1, were continued later by e.g. Fredericq (1880) and Hopkins (1900). Hoppe-Seyler and Araki (1895) investigated the formation of lactic acid in animals by laboratory tests. The digestion of sugars and starch was also studied (e.g. Musculus and Mering 1878-79, Brown and Heron 1880, Miura 1895, Weinland 1899, Krüger 1899). Polarimetry could simplify various matters regarding the nature of sugars.

For instance, one scientist claimed in 1888 that the lactose in milk varied in character between mammals. Denigès (1893) however showed that lactose from humans, horses, donkeys, cattle, dogs, goats and sheep was quite identical in its optical activity and other properties. In a similar way, claims in 1897-98 that diabetic patients excrete at least three different kinds of sugars, were quickly disproved by Patein and Dufau (1899).

Knowledge of polysaccharides from the vegetable kingdom, acquired since J.B. Biot initiated his pioneering work on these in 1832 (section 12.4), no doubt helped in research on glycogen after C. Bernard described its important function in animal metabolism in 1857. Glycogen which is primarily found in the liver, is composed of glucose units like starch (section 13.2); this was demonstrated by Berthelot and Luca (1859) using polarimeters. See Bernard (1872) and Külz (1881) on comparisons between the optical properties of glycogen, starch, and some other substances. Salkowski (1894) suggested on the basis of polarimetry and other evidence, that yeast contains glycogen; it was later also found in for instance mushrooms and beans. The identity of glycogen from all animal and plant sources was confirmed by means of further measurements of its optical activity (e.g. Harden and Young 1902, Gatin-Gruzewska 1904), hydrolysis experiments, etc.

In the food industry, problems were encountered in the analysis of sugar solutions where more than one type of sugar and/or other optically active materials might be present. This applied for instance to liqueurs, fruit juices, jams, cakes, condensed milk, and chocolate (Rathgen 1888, Lindet 1889, Wiechmann 1892, Raczkowski 1896, Tolman 1902, Fogelberg 1904, Dubois 1906, Richardson and Jaffé 1907, Yoder 1911, Grossfeld 1918, Auerbach and Krüger 1923b, etc.). Various means were employed to separate the interfering constituents in preparation for polarimetric measurements, such as precipitation, heating, inversion by acids, fermentation, and treatment with alkalis (see e.g. Chapters X-XI of Browne 1912).

In the large-scale production and transportation of sugar compounds, starch and related substances, polarimeters once more played a role. For instance, the work by A. Béchamp on detrimental effects by microbes on raw materials in the sugar industry (mentioned in section 16.2) was continued by Gayon (1877, 1882) who suggested ways of minimizing these effects. It is clear from his papers that the industry was increasingly aware of the necessity to know the character of the materials being used, and to keep them pure. The first U.S. book on sugar production which includes sections on polarimetry (Tucker 1881) was reprinted several times to 1912. Wiechmann‘s (1890) book on sugar analysis also emphasizes the use of polarimeters.

Research on the formation of sugars from starch by acid treatment and by fermentation was of course also continued (Allihn 1880, Salomon 1883, Johnson 1898), as this was already an important field within the food- and brewing industries. Brown and Heron (1879) used polarimetry to identify nine intermediate compounds in the breakdown of soluble starch (amylodextrin) to maltose. A subsequent paper on the subject (Brown and Morris 1885; see also Lippmann 1904, p. 1446) starts by claiming that this field is still in a state of confusion, in spite of having perhaps attracted more workers in the preceding 60 years than any other in the whole range of chemistry! However, the situation seems to have improved from then on: for instance, new enzymes capable of converting maltose to glucose were discovered in plants and in yeast around 1890 and studied by polarimetry and other methods (Kellner et al. 1890, Geduld 1891, Lintner and Kröber 1895). In a handbook on analytical techniques for brewers and maltsters, Bailey (1907, p. 39) asserts that in the last 20 years or so "...the polarimeter has become an indispensable instrument, and has played a wonderful part in enabling those who have worked upon starch-conversion products to define many points,... "

The pentoses arabinose and xylose may be recovered by hydrolysis of certain polysaccharides (pentosans) which are abundant in many gummy and gelatinous vegetable materials as well as in plant stalks, wood, roots, bark, husks, straw, corn cobs, etc. The pentoses are optically active, which was very useful in research on them and their derivatives as well as on the tetrose sugars (e.g., Scheibler 1873, Kiliani 1886, Wheeler and Tollens 1889, Steiger and Schulze 1890, Ruff 1901, Grünhut 1901).

Another example of a new sugar is the trisaccharide raffinose, first isolated by Loiseau (1876) from sugar refinery products. It is present in very small quantities (< 0.02%) in sugar beet, but at the end of the sugar extraction process may constitute up to 10% or more of some of the residual syrups (molasses). As stated already by Loiseau, raffinose has higher optical activity than sucrose, which explained why these syrups had for years appeared to contain more than the expected amount of sucrose. Scheibler (1885) and Tollens (1886) showed with the aid of polarimeters, that raffinose was the same substance as two others, which had been extracted respectively from the resin of eucalyptus trees and from cotton seeds. Scheibler and Mittelmeier (1889) found that raffinose could be hydrolysed into fructose and a disaccharide composed of glucose and galactose, which they named melibiose. Raffinose was later found widely in the vegetable kingdom (e.g., Hérissey and Lefebvre 1907), and Neuberg (1907) demonstrated that it could also be split into sucrose and galactose by the enzyme emulsin. Similarly, the tetrasaccharide stachyose from Chinese artichokes was studied at an early stage with polarimetric measurements (Planta and Schulze 1890, Tanret 1903) and eventually found to consist of fructose + 2 galactoses + glucose (Schulze 1910).

Improved knowledge of compounds such as the sugars opened up new possibilities in agriculture. Valuable applications could sometimes be found for byproducts that had been used as animal feed, fertilizer, or fuel, or even been disposed of altogether as bothersome waste. One example is the melibiose just mentioned, which is an isomer of lactose. As it is quite rare in nature, it continued to be made from raffinose (a by-product of sucrose refining) for a long while. According to Internet sources, melibiose is now a common ingredient in cosmetics, and it has also various uses in biology and medicine. Ost (1906) describes industry efforts to utilize profitably the (optically active) amino acids and other nitrogen compounds present in the sludge discarded by beet-sugar factories. More on such applications in section 27.4.

Although optical activity was clearly a very significant aspect in all pure and applied research on sugars cf. the large monograph by Lippmann (1904), it should be noted that other methods were also available for measurements on sugar products in industry, see section 35.3.

22.3 Optical activity in studies of molecular structure, 1880-1900

The above-mentioned J.A. Le Bel (e.g. 1891), as well as J.H. van‘t Hoff, Ph. A. Guye and collaborators (Guye 1891, Guye and Chavanne 1896, etc.), P.F. Frankland, A.C. Oudemans, C.S. Hudson (1909, sugars), H.G. Rule, H. Rupe, P.A. Levene and others attempted until 1930 to connect the optical activity of organic liquids and solutions quantitatively with the expected shape of their molecules. An important parameter here was the asymmetry of the molecular mass distribution. The main hypothesis in these efforts, referred to as optical superposition, prompted much new research in the field according to Landolt (1898, section G), and Rolfe (1905, p. 249) even considers it to have been “of vital importance”. Prominent workers also state later in their papers (e.g. Levene 1921, Hudson 1926) and books (Pringsheim 1925, p. 146-150; Lowry 1935, p. 274-278; Bates et al. 1942, p. 428-435) that certain rules proposed by Hudson on the basis of these hypotheses, were very useful in the synthesis of new compounds. The superposition idea however did have its limitations, and was strongly criticized by for instance Rosanoff (1906) and T.S. Patterson. The distribution of electrical charge within the molecules, and the nature of the bonds between their constituent atoms, will along with the mass distribution influence the optical activity (see Walden 1900, p. 171; Wittig 1930, p. 111-114; Haworth and Hirst 1930; Freudenberg and Kuhn 1931; Lowry 1935, p. 278).

Various aspects related to these studies were investigated extensively, some in fact going back to discoveries by J.B. Biot and L. Pasteur before 1860. One aspect concerned the effects of inactive solvents on the optical activity of compounds dissolved in them (Winther 1907, and many other authors). Another one of practical importance was a large increase (up to a hundredfold) in rotatory power occurring in many active compounds when combined with others containing boron or certain heavy metals (Gernez 1887, Walden 1897). The specific activity of some compounds such as malic and lactic acids turned out to be highly dependent on their concentration in aqueous solution or on the temperature, indicating that they existed in two or more different forms (cf. the mutarotation phenomenon of section 22.7). Discussions on the most suitable way of writing structural formulas for organic molecules, partly connected to the supposed causes of their optical activity, lasted for decades (see chapter 9 of Ramsay 1981).

The measurements by Guye and others were carried out with yellow sodium light only, but in order to obtain more significant information on the molecular structures, it was necessary to know how the activity changed with wavelength (optical rotatory dispersion). As mentioned before, J.B. Biot had found that it increased rapidly towards the violet in most cases, but occasionally (Biot 1838, tartaric acid; Nasini and Gennari 1896, malic acid) the change is somewhat irregular. Instruments suitable for studying this phenomenon (anomalous rotatory dispersion) were described by Fleischl (1885), Seyffart (1890) and others. Further research on it was carried out around the turn of the century, especially by A. Cotton (1895b, 1896) using Nicol prisms and a Fresnel quarter-wave glass prism (section 8.1). Cotton pointed out that the anomalous rotatory dispersion had close similarity to the strange behavior of refractive indices (anomalous dispersion) in solutions of certain dyes which C. Christiansen had been the first to notice in 1870 (section 21.2). This behavior had suggested that damped resonators in molecules were involved. See more in sections 29.8 and 34.2.

Cotton (1895a, 1896) also found that when monochromatic linearly polarized light is sent through a sample of some colored optically active liquids such as solutions of tartrate metal salts, the emerging light beam is elliptically polarized and the major axis of the ellipse has rotated from the direction of the incident light vector. This phenomenon is called the Cotton effect or "circular dichroism". One may imagine the incident light being composed of two circularly polarized waves of equal intensity. The liquids absorb more of the right-handed than left-handed wave, or vice versa, and their speeds are also different. This effect is in fact due to the same causes as optical rotatory dispersion, but it appears when the frequency of the light is close to a resonance frequency for an electronic transition in the dissolved molecules. See more in section 34.2.

Much was written in the latter part of the 19th century about the reasons for optical activity of crystals, cf. for instance Sohncke (1876) and Barlow (1897). Many of these publications (e.g. Verdet-Exner 1887, Thompson 1889) quote an experiment by Reusch (1870) who laid a large number of thin mica sheets on top of each other. The optical axis of each sheet (which lies approximately in the plane of the sheet) made 60° angles with those above and below. Such a stack was found to rotate the plane of polarized light in a similar way as a quartz crystal; this supported Fresnel's suggestion (section 8.2) that the optical activity of quartz is caused by some kind of a spiral structure of its particles.

Throughout the 19th century, no optical activity was detected in biaxial crystals, and some scientists provided theoretical arguments for its non-existence in these (see Rev. Gén. Sci. 14, 1018-1019, 1903) while others blamed technical problems or "optical anomalies" (Pockels 1906, p. 301-303). It however supported the possibility of such crystals being eventually found, that quartz became biaxial under pressure but kept its optical activity (Mach and Merten 1876). At last Pocklington (1901) succeeded in demonstrating that sucrose crystals (monoclinic) and Seignette salt (also known as Rochelle salt, an orthorhombic Na-K tartrate) are optically active. The property which was soon found in additional biaxial crystals (Dufet 1904b), can only be seen very close to the axes. It was later realized that out of the 32 symmetry classes of crystals, 15 (from all the 7 systems) should exhibit optical activity, i.e. those 11 that have no plane of symmetry (see Tutton 1922, p. 1272) and 4 others. Lowry (1935, p. 340) states that all compounds that are optically active in solution, must also form active crystals. However (according to Handbuch der Physik vol. 25/I, p. 83), optical activity had been experimentally observed in only 7 symmetry classes by 1960.

In continuation of G. v. Rath's discovery of the tridymite modification of silicon oxide (section 18.2) he found another one in 1887 and called it cristobalite. Le Chatelier (1889, Mallard and Le Chatelier 1895) investigated properties of quartz while it was being heated, and noted that they changed in a reversible way at 570°C. These properties included its optical activity and refractive indices, as measured with the method of Fizeau and Foucault (1845) of section 13.1. It turned out that at this temperature the crystal structure of quartz changes from what is now called α-quartz to β-quartz; tridymite and cristobalite are formed at much higher temperatures. These were important steps in the acquisition of knowledge about the physical state of silicon oxides at high temperatures and pressures. Such knowledge is valuable in geology (Fenner 1912) and also in industry: thus, tridymite and cristobalite are the main ingredients of "silica bricks" used widely in the internal lining of furnaces (Ross 1919, Weyl 1953) for the manufacture of for instance coke, glass and steel. Also, quartz later became one of the raw materials in a high-temperature porcelain for use e.g. in the spark plugs of aircraft engines.

Before 1890, J.A. Le Bel and others had began speculating whether any molecules with a mirror-image symmetry (being therefore optically active) could be based on atoms of other elements than carbon. In particular, the behavior of nitrogen in its organic compounds suggested that its chemical bonds might be three-dimensional. See section 27.5 on the development of that topic during the following decades.

Great progress was made in geometrical crystallography around 1890, partly based on theoretical work by C. Jordan mentioned at the beginning of chapter 21. Among the contributors to this progress were L. Sohncke (1879) and W. Barlow, both of whom appeared earlier in this section, A. Schoenflies (1888), and E.v. Fedorow (who also contributed to advances in polarizing microscopes, see section 29.1). This progress increased scientists' understanding of the physical properties of crystals (see e.g. Liebisch 1891, Voigt 1910), and paved the way for technical applications of these properties. As an example, the absence of a certain symmetry element is the prerequisite for a crystal to exhibit the piezoelectric effect, cf. the case of optical activity: the Seignette salt that was just mentioned, was used in microphones and record-player pickups because of this property. The crystals in question were studied in detail with polarized light and other methods (e.g. Valasek 1922). W.G. Cady found around 1922 that by utilizing the piezoelectric effect in specially cut quartz plates, it was possible to design electronic circuits with very narrow resonance-frequency peaks. His work played a major part in rapid development of radio communication and broadcasting in the following decades. In patent descriptions of that period it may also be seen that people became interested in using quartz crystals in various ways in television technology, sometimes along with Nicol prisms. I have not checked what impact such patents may have had in practice.

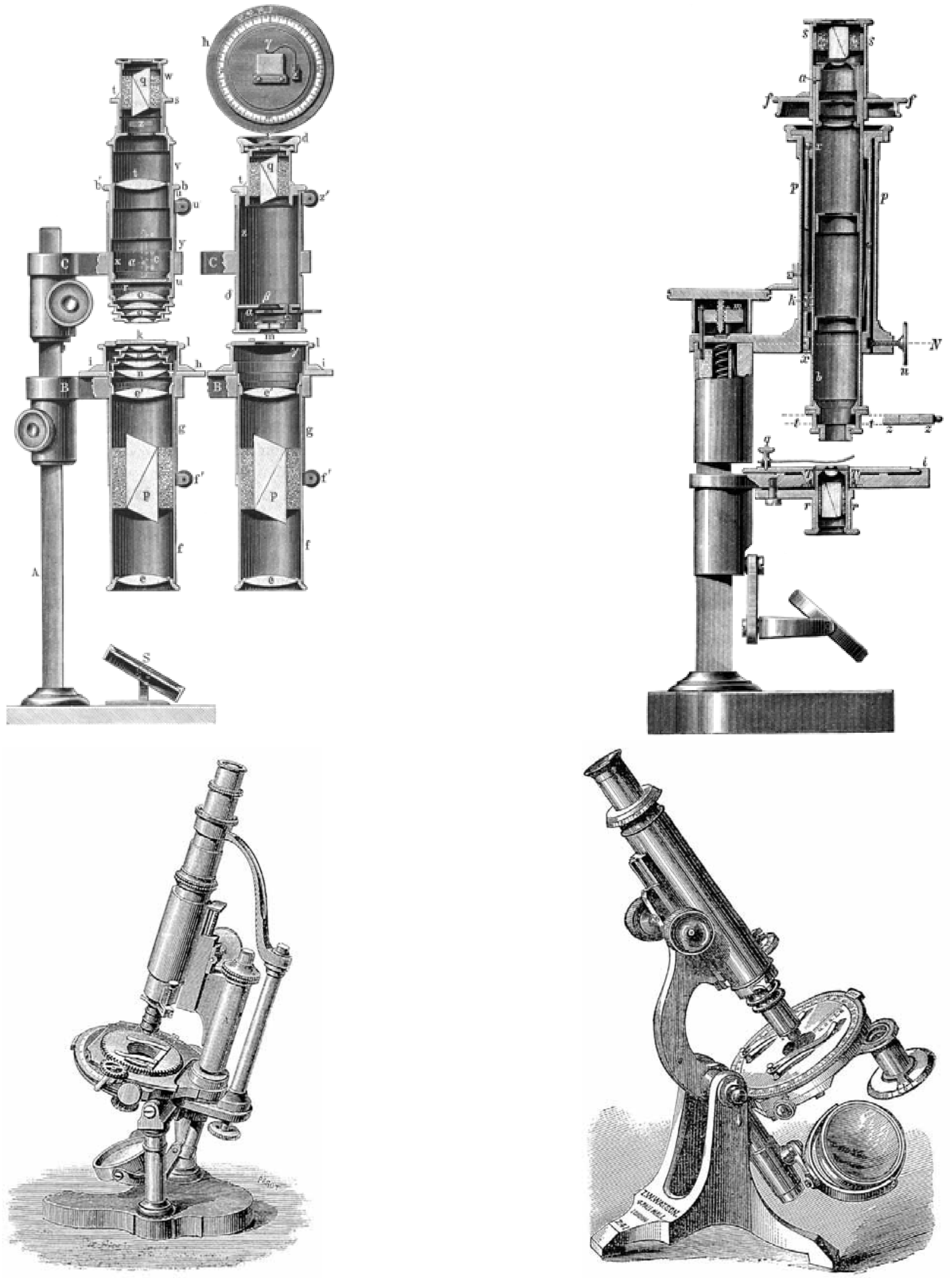

Figure 22-2. Some of the first commercially produced polarizing microscopes with built-in Nicol prisms. *Top left:* Groth's (1871) microscope which could be used as a konoscope for studying grains in thin sections (tube on the left) or a stauroscope with low magnification for studying crystal plates (tube on the right). *Top right:* The microscope of Rosenbusch (1876). Both were made by R. Fuess; the illustrations are from Groth (1885). *Bottom left:* A microscope probably made by A. Nachet, described by Fouqué (1876). *Right:* A new microscope from W. Watson, praised by Rutley (1879b).

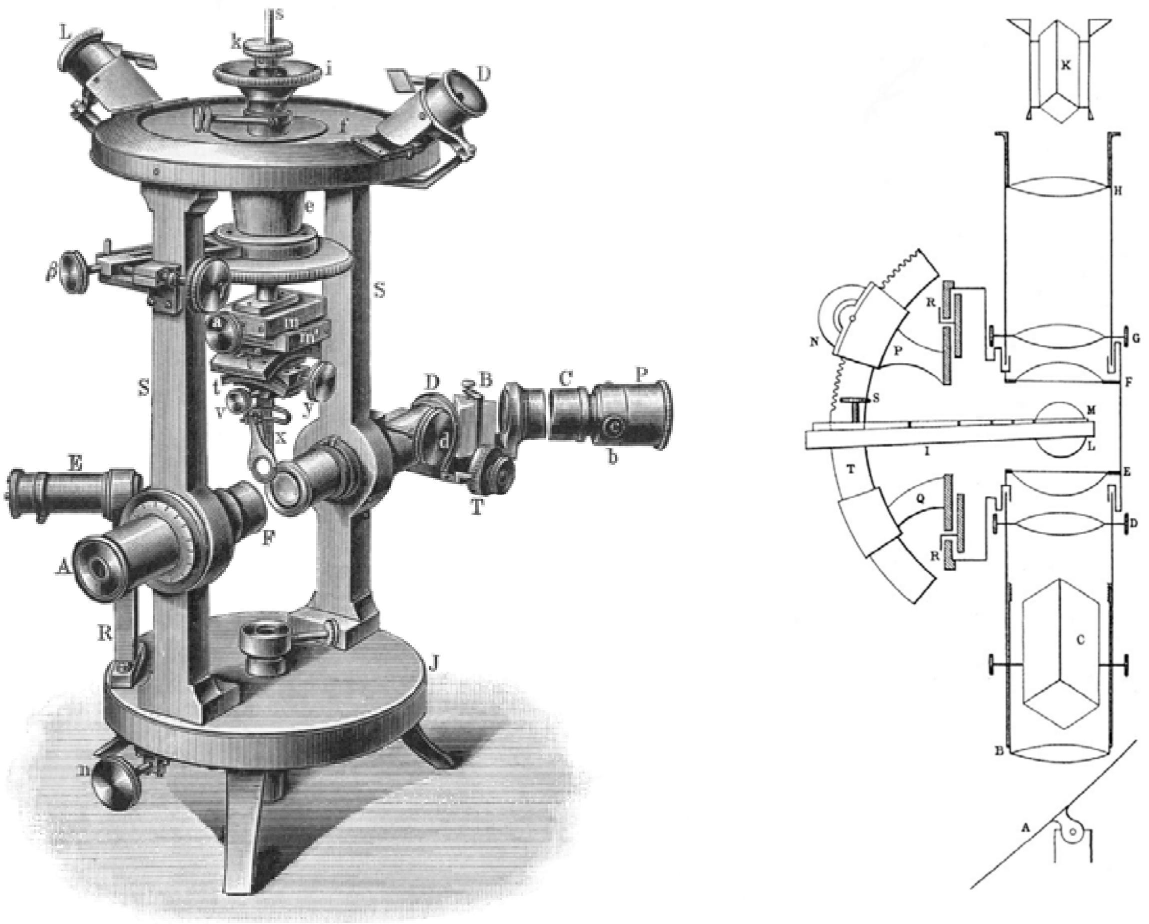

Figure 22-3. Instruments for measuring the angle between the optical axes in single crystals. *Left:* Apparatus with a dispersing prism B, allowing measurements to be made at different wavelengths. Nicol prisms are at P and A. This type, designed by Liebisch (1885) and manufactured for sale by R. Fuess, is similar in appearance to another one described by Lang (1867). The illustration is from Lummer (1909). *Right:* Cross-section of a simpler apparatus by Adams (1879).

22.4 Microscopes and other petrographical instruments, c. 1870-90

Section 18.2 on progress in polarized-light microscopy to 1870 mentions the pioneering efforts of H.C. Sorby (and independently A. Oschatz) in the production of thin sections of rocks for study in the 1850s. The potential of this method was greatly increased when F. Zirkel (1863, 1866) demonstrated the advantages of polarized light for identification and characterization of the various minerals in such sections. To facilitate comparisons between observations, it is advisable that the sections be of standardized thickness; already Vogelsang (1867, p. 226) found 0.03-0.04 mm to be suitable. At the lower value which has been generally adopted, most minerals (apart from metal sulfides, metal oxides etc.) are transparent. A variety of cutting and polishing machines, abrasive powders, impregnating materials for soft and friable rocks, etc., were soon developed, and commercial firms offered thin-section making services (see Girard 1875). Thus began a period of rapid progress in microscopical petrography (see Hamilton 1992), lasting well into the 20th century with great impact on geological research in general.

Groth (1871) describes in detail a microscope that was constructed for him by R. Fuess in Berlin for petrographical studies in polarized light (Fig. 22-2). Another (possibly simpler) one made for H. Rosenbusch (1924) in 1870 was later presented to the Deutsches Museum. Rosenbusch designed an improved model, produced in 1876 by the Fuess workshop (Rosenbusch 1876, 1892, 1904). E. Bertrand (1880) describes a petrographical microscope made for him around 1870, see Lima-de-Faria (1990, p. 68-69). One more microscope with Nicol prisms appears in Lasaulx

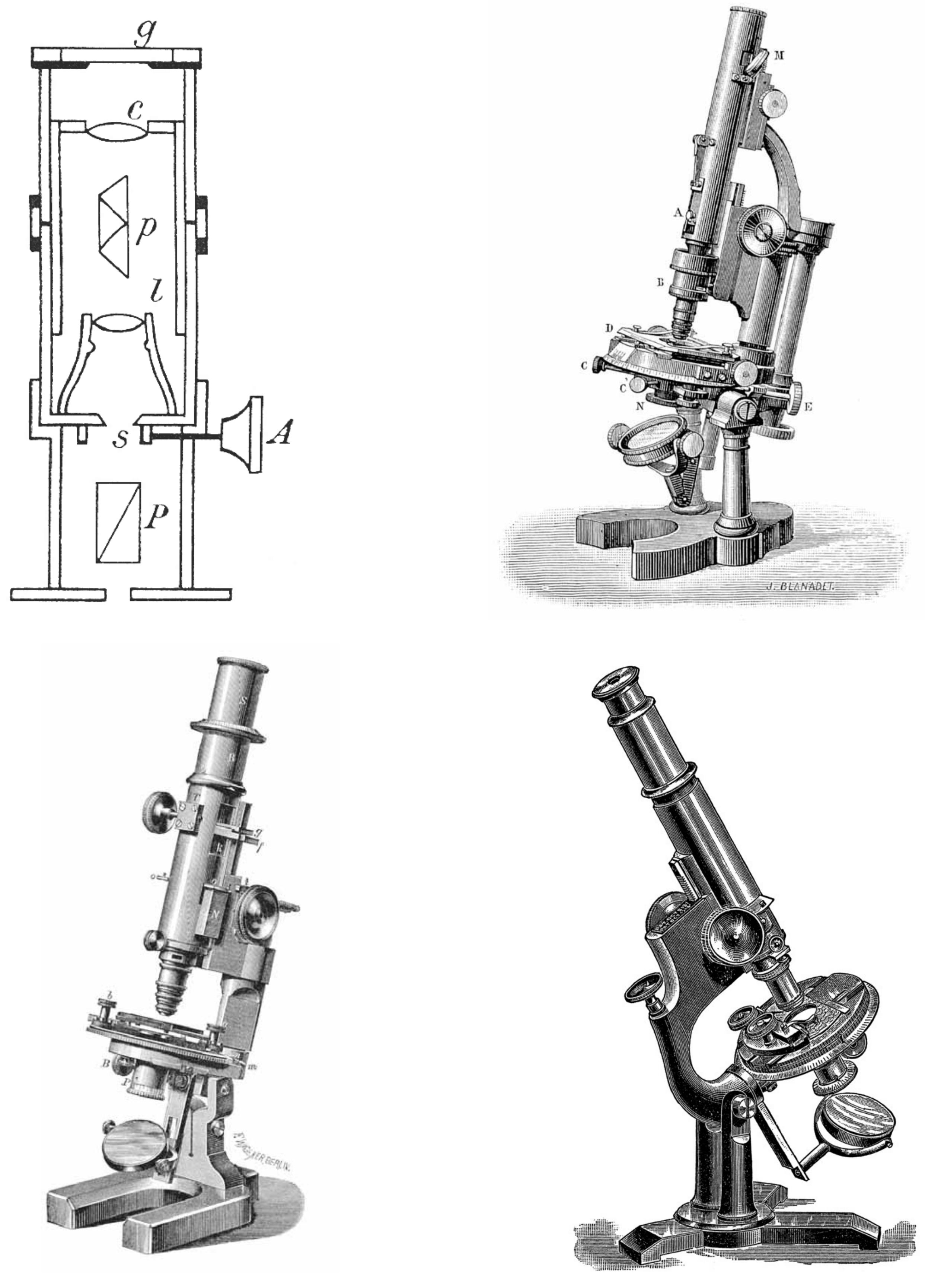

Figure 22-4. Polarizing microscopes in development. *Top left:* The spectro-polarizer of Rollett (1881) for viewing microscopic specimens in different colors. From Becker (1903). *Right:* A. Nachet's (1979) "grand modèle", from his 1881 catalog. *Bottom left:* Rosenbusch's (1885) microscope, incorporating improvements from his design of 1876. *Right:* The microscope of Williams (1888).

(1878), but in an instrument produced by Nodot (1877) a glass-plate mirror is used as a polarizer. Other workshops had started producing microscopes containing Nicol prisms by 1880 (Fouqué 1876, Rutley 1879b, Fig. 22-2), including the well-known firm of A. Nachet in Paris (Fig. 22-4).

In 1880 W. Bulloch was the first one to make petrographic microscopes in the U.S. (Winchell 1889). Others followed (see Williams 1888, Kile 2003, Fig. 22-4) but after 1887 Bausch & Lomb remained as the sole manufacturer in that country for 35 years or more. Important new techniques were introduced, especially for viewing individual grains in convergent light. See for instance Bertrand (1878 and later), Lasaulx (1878), Michel-Lévy (1877, 1883, Fig. 22-5), Mallard (1882) and the horizontal microscope of Dufet (1886). In microscope models before 1880 or so, the analyzer prism was above the ocular, but placing it within the tube well below the ocular turned out both to be more convenient for most purposes and to give a wider field of view. In many later advanced microscopes, an extra "cap nicol" (Aufsatzanalysator) was supplied for special tasks. E. Abbe (1884), the famous designer of optical instruments, suggested mounting a special analyzer prism from Iceland spar and glass between the lenses of the ocular. Abbe's device (Fig. 22-5) was offered by the Zeiss company as an optional accessory from 1879 at least until 1913; some others pointed out disadvantages of this arrangement (cf. Calderón 1878, Köhler 1926, p. 914-915, 940-941, Ambronn and Frey 1926, p. 102). The above developments and their effects on mineralogical research are discussed in for instance reviews by Fouqué (1879) and Klein (1886), in the book by Rosenbusch referred to, and in the comprehensive volume by Johannsen (1914).

In addition to the ordinary type of polarizing microscopes, other instruments with Nicol prisms for petrographic research appeared in 1870-90. Kobell's stauroscope for establishing axial directions in crystal plates has already been mentioned in section 18.2; this as well as Nörrenberg's microscope were improved by Brezina (1866), Groth (1871, Fig. 22-2), Calderón (1878) and Laspeyres (1882) by the use of Nicol prisms. Useful accessories for petrographic microscopes included the Babinet quartz-wedge compensator (section 13.5), and specially cut quartz plates introduced by A. Bravais (1855), C. Klein, E. Bertrand, and others. Stauroscopes were produced at least to 1920, see Tutton (1922, p. 974 and 1159) who states that Groth's stauroscope was "the most efficient form of polariscope for the measurements of extinction angles". These are angles that are measured between the optical axis of a crystal and the direction of polarization in a polarized ray passing through it, under certain conditions. The magnitudes of extinction angles turned out to depend on the composition of biaxial crystals, and so did the angle between the two optical axes. Sophisticated instruments for axial-angle measurements were designed by Groth (1871), Adams (1879, Fig. 22-3), Becke (1879), Fuess (see Bauer 1882), Liebisch (1885, Fig. 22-3), and Mülheims (1888). Devices for measuring refractive indices with great accuracy included so-called total-reflection meters described by F. Kohlrausch (1878, see also W. Kohlrausch 1878), Bauer (1882), Pulfrich (1887) and Abbe (see Leiss 1898a). Fedorow (1891, 1893) invented around 1889 so-called universal stages for goniometers and petrographic microscopes where a crystal or a thin section could be rotated about any axis (Fig. 22-7).

Sorby (1867, 1875) designed a small spectroscope for incorporating into microscopes, along with a calibrating device composed of two Nicol prisms and a quartz plate. This was marketed by Beck (1882). Similarly, Rollett (1881) made a spectro-polarizer (Fig. 22-4) to allow microscopic measurements of biological preparates at various wavelengths. It was produced commercially by the Zeiss company to at least 1902, according to Rollett (1891) and Zeiss catalogs. A more complex device improved by E. Abbe was offered by Fuess (1891, p. 70) for petrographic work.

By making use of comparisons of optical properties and chemical analyses on large crystals, improved models of polarizing microscopes (see e.g. new types from R. Fuess in Fig. 22-6) could to an increasing degree be employed in estimating the chemical composition of small crystals in

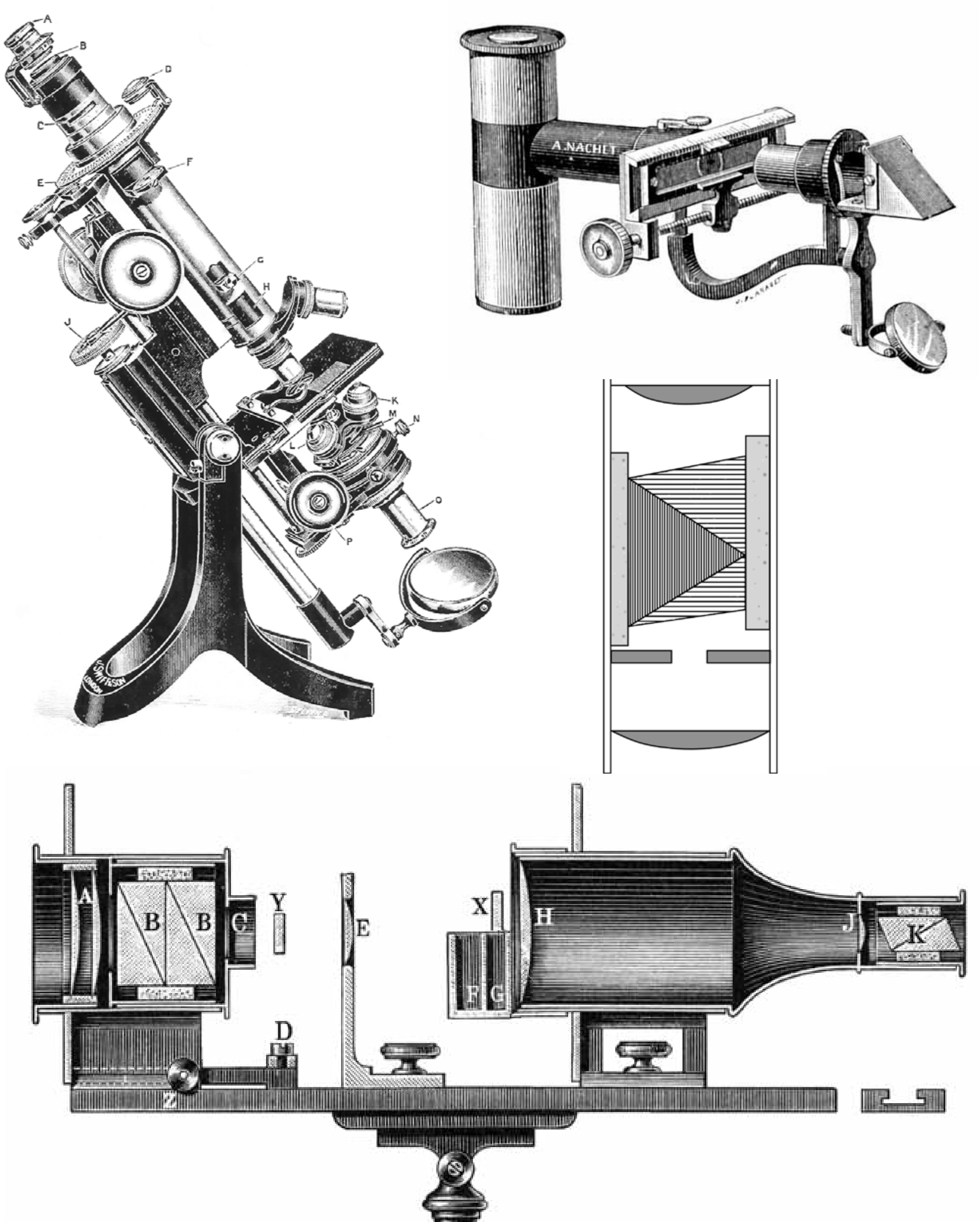

Figure 22-5. Various innovations. *Top left:* The petrographic microscope of Dick (1889), as improved and manufactured by J. Swift & Son. From Johannsen (1914). *Top right:* The Michel-Lévy (1883) comparator for measuring birefringences in thin sections. It incorporates two Nicol prisms and a quartz plate. From A. Nachet's (1979) catalog of 1892. *Center right:* Abbe's (1884) analyzer prism in a microscope ocular. It consists of a calcite wedge between two glass wedges. Redrawn from Kaiser (1896). *Bottom:* J. Duboscq's projector with large Senarmont and Nicol prisms (Bertin 1875), later modified by V. v. Lang. Light enters from the left, crystal plates e.g. for demonstrations are placed at X or Y. From Verdet-Exner (1887).

thin sections. This applies especially to the plagioclase feldspars mentioned in section 18.2 (see e.g. Des Cloizeaux 1875, Schuster 1881, Becke 1893, 1906) but also to the pyroxene (Doelter 1885) and amphibole groups. In the microscope work, it was also found that minerals which previously had been known from a few localities, were in fact quite common in the Earth's crust. Thus, Grubenmann (1887) writes that petrographers had been "…very surprised to encounter these accessory components of rock in unexpected quantity and variety. Apatite, magnetite, zircon, rutile, tourmaline, hauyne, perovskite etc. etc. have emerged as ever more widely distributed minerals". His view is seconded by Tschermak (1894, p. 5). People also found that particular minerals often accompanied each other in rocks, and that the changes occurring on alteration could be tracked. This among other things led to improvements in the classification of rock types (Williams 1886), and it also aided in prospecting for ore minerals (Groddeck 1883). The geologists F. Fouqué and A. Michel-Lévy were publishing papers on the examination of thin sections by the methods of Zirkel and collaborators from 1874-75. They and A. Lacroix subsequently wrote much on mineralogy and on the petrography of igneous rocks. P. Hautefeuille (1880), F. Fouqué (1882), A. Michel-Lévy, C. Friedel and others produced around 1880 in the laboratory various minerals, gemstones (see Fremy 1891), rocks such as basalt, and even meteorites. These mineral syntheses were verified in part by means of polarizing microscopes, see e.g. Doelter (1884, 1888). Similar work was continued by scientists like J. Morozewicz (1898) and H. Moissan (Nobel prize in chemistry 1906); the latter succeeded in making both diamonds and the new abrasive compound carborundum in his electrical furnaces. Arrangements for viewing crystals in a polarizing microscope while they were being heated with a gas flame, were developed by O. Lehmann (1910, Fig. 22-7) from c. 1877.

Considerable discussion took place in the last quarter of the 19th century regarding the nature of „optical anomalies" in crystals. This term refers to cases where the optical symmetry of a sample under the polarizing microscope was not consistent with its crystal class. Thus, a cubical crystal might exhibit double refraction, and a crystal from one of the three uniaxial systems might turn out to have two optical axes. French scientists led by Mallard (1876, 1886) considered this behavior to be due to phenomena such as lamellar twinning (which had in the past also caused some minerals to be assigned to the wrong crystallographic system), while Germans including Klocke (1880) and Klein (1887) blamed it on internal tensions due to rapid crystallization or tectonic strain. A comprehensive study in a prize monograph by Brauns (1891) divided the optical anomalies in minerals into five classes, allowing for both the above viewpoints.

C.D. Ahrens who was mentioned in section 22.1, and perhaps some other opticians as well, constructed quite large Nicol prisms (up to 7-9 cm wide) and beam-splitting prisms in the 1870s while large crystals of Iceland spar were available (Ahrens 1899). Most of these were probably used in equipment for demonstrations in optical crystallography and mineralogy, see Cheshire (1906-07) and Tutton (1922, p. 848-860). A versatile projector from J. Duboscq with large Nicol prisms (Bertin 1875, Pellin 1889) was later improved by V. v. Lang (Verdet-Exner 1887, p. 132; Lummer 1909, p. 854), see Fig. 22-5. Mach (1875) and Govi (1880) built small projectors for demonstrating polarization effects in crystals, where the analyzing prism was rotated at constant speed by a motor; these were manufactured for sale from 1875 onwards (e.g., Pellin 1899, Kohl 1909).

Increased interest in microscopical studies in geology was reflected in the publication of scholarly journals. G. Tschermak began in 1871 issuing Mineralogische Mittheilungen, which became Mineralogische und Petrographische Mittheilungen in 1878. The Mineralogical Magazine was founded in 1876, and P. Groth launched the Zeitschrift für Kristallographie und Mineralogie in 1877. The Bulletin de la Société Minéralogique de France appeared in 1878, and the long-established Neues Jahrbuch für Mineralogie expanded considerably from 1880. These journals con-

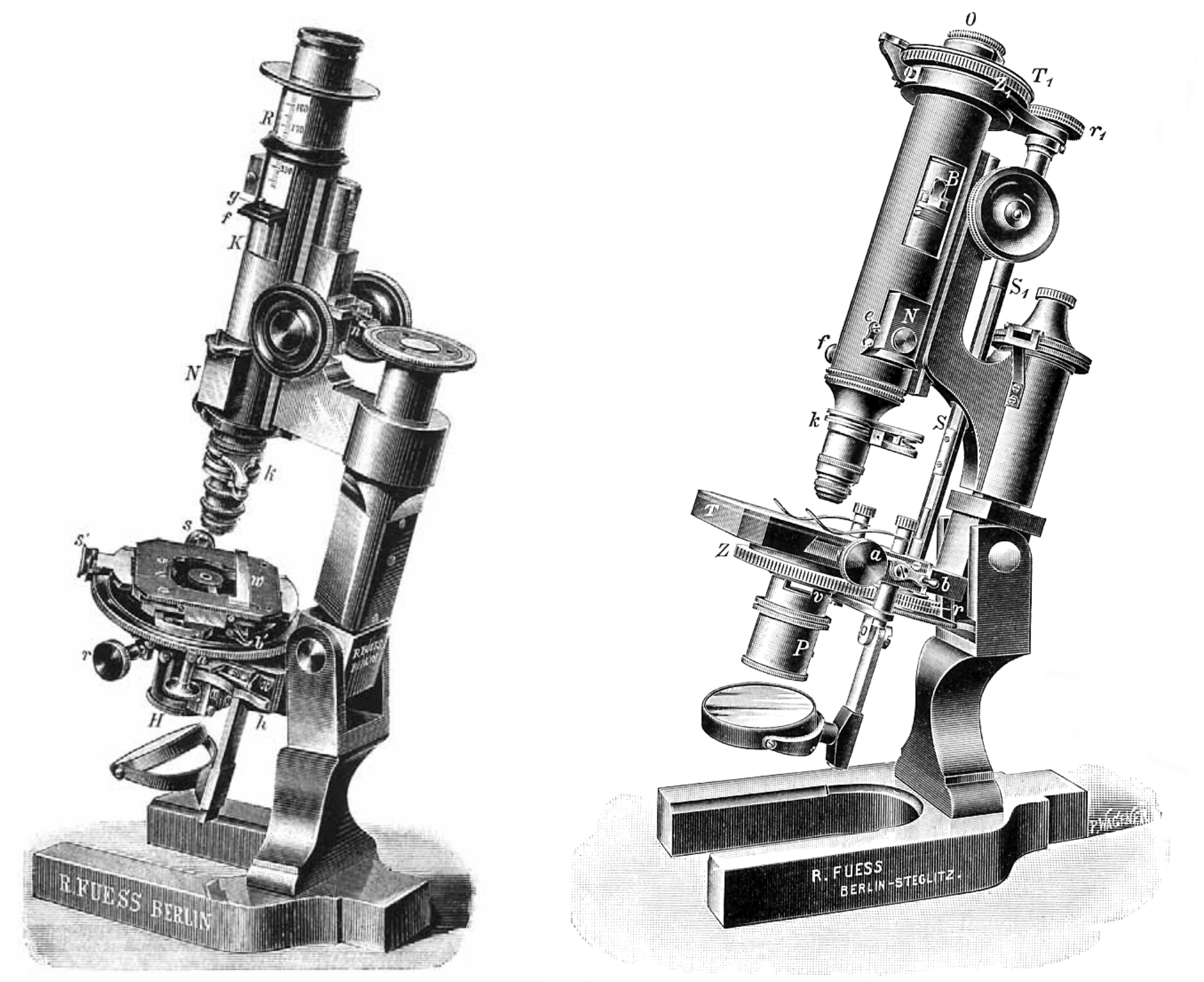

Figure 22-6. Two microscopes from the R. Fuess workshop. The one on the left was presented by Fuess (1891). The other one which is probably somewhat younger, is illustrated in the book by Duparc and Pearce (1907).

tained annually tens of papers on mineralogy and petrology, in addition to a much larger number of extracts of papers from other journals and serials, doctoral theses, and books. Among the many textbooks or monographs on microscopical petrography appearing before 1890 were those by Zirkel (1873), Rosenbusch (1873, 1877), Rutley (1879a), Hussak (1885), Lasaulx (1886), and Michel-Lévy and Lacroix (1888). A color chart was included in the last-named publication, to aid in the identification of minerals by their interference colors in polarized light. These colors depend on the differences between the refractive indices of a mineral, i.e. its birefringence. Such charts have ever since been a valuable tool in petrographic study and research, see Pirsson and Robinson (1900). Books describing the petrography of individual countries or regions were also published, e.g. by Zirkel (1876), by Fouqué and Michel-Lévy (1879) on French rocks, and by Teall (1888) on British rocks.

Examples of the use of polarizing microscopes in biology in 1870-90 include the research by Ebner (1874, 1882 and more) on the structure of bones and teeth, as well as of carbonate skeletons in sponges and corals. Engelmann (1873, 1875, and later) investigated with a polarizing microscope important features of the action of muscle fibers. Modern textbooks also indicate that such microscopes found continued applications in other studies of muscles, connective tissue, substances like cholesterol (which is a liquid crystal, see section 27.2), and crystals from blood (Ewald 1886). Taylor (1885) demonstrated that various types of fats could be distinguished in a polarizing microscope, making it possible to detect for instance adulteration of butter by vendors.

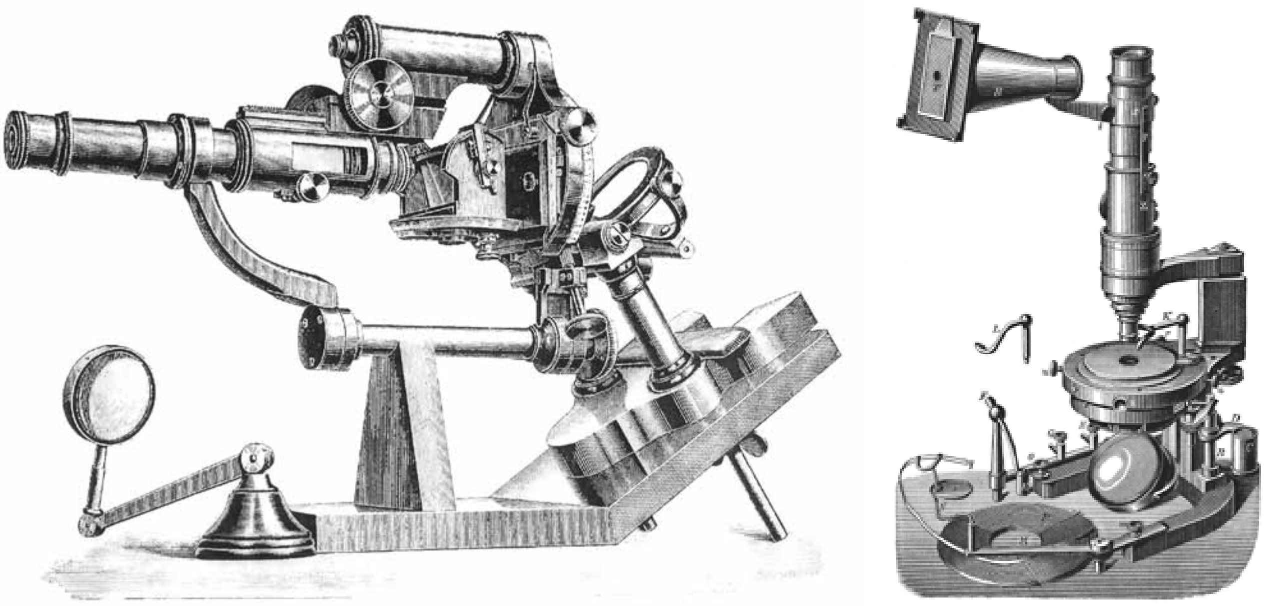

Figure 22-7. *Left:* A horizontal early version of a universal-stage microscope, first described in Russian journals around 1890 (from Fedorow 1893). *Right:* A microscope from about 1888 (Lehmann 1910) with arrangements for heating a crystal specimen on the stage with a non-luminous gas flame. A camera can be moved into position at the top.

Around 1880 various scientists were beginning to investigate chlorophyll, mostly because of its biological importance but also because of its fluorescence. This research had some problems as chlorophyll is a rather unstable compound, it crystallizes only with difficulty, and it is generally accompanied by related colored compounds like carotene and xanthophyll. Borodin (1883) was the first to show, using a polarizing microscope, that some of these compounds could form doubly refracting crystals.

23 Effects of electric fields and magnetic materials on polarized light, 1875-1900

J. Kerr (1875, 1879, 1880, 1882, see Fig. 23-1 and a diagram in Kristjansson 1996) demonstrated that when linearly polarized light passes through some transparent isotropic materials like glass or fluids in a transverse electric field, then they show evidence of double refraction. This effect is variable depending on the materials but is generally very modest so that field intensities of thousands of V/cm are needed. The amount of birefringence is proportional to the square of the field intensity. The 1875 discovery of this phenomenon generated considerable interest although its existence was not fully confirmed until a few years later, by W.C. Röntgen (1880), G. Quincke, and H. Brongersma. This electro-optical effect named after Kerr was then investigated in more detail by Quincke (1883), Blondlot (1888), Kerr himself (1888, 1894) and others. The effect is most noticeable in substances where the molecules are quite asymmetric, i.e., have a large electric dipole moment. Among those showing the most pronounced Kerr effect were the liquids nitrobenzene ($C_6H_5NO_2$) and nitro-toluene. Later, nitro-benzene and carbon disulfide (CS_2) were used in various technical applications of the effect, see chapter 38.

A related optical effect due to electric fields, which however increases in proportion to the field intensity, was probably first noted in quartz by Röntgen (1883) and A. Kundt. Later, it was studied in detail by Pockels (1891, 1894, 1906). This electro-optical effect which only appears in crystal classes exhibiting the piezo-electric effect, was therefore named after Pockels. It causes a change in the state of polarization of light on passing through an a crystal (superimposed on the changes which happen anyway). See also sections 27.3 and 39.6.

Kerr (1877, 1878) discovered a new magneto-optical effect when he let a linearly polarized light ray be reflected from a polished iron surface at the core of an electro-magnet. The light then became elliptically polarized, to an increasing degree as the magnetization of the iron increased. This discovery created even more stir than Kerr's electrical effect. It was found that this effect resembled a very strong Faraday effect: in passing through iron carrying its saturation magnetization, the plane of polarization rotated of the order of 20,000° /mm. Among other things, physicists looked for connections between the magneto-optical effect and the Hall effect (i.e., appearance of a transverse electrical field in a current-carrying conductor in a magnetic field) which was discovered in 1879. These connections turned out to be difficult to establish, although the theoretical foundations of the Faraday and Hall effects do have some similarities. The Kerr magneto-optical effect was investigated experimentally by Hall (1881), Kundt (e.g. 1884, thin films), Righi (1885, 1886, 1887, Fig. 23-3), Sissingh (1891), Du Bois (1890), P. Zeeman, and others around 1890 (see Drude 1900a, p. 412-419).

W.H. Perkin the elder, who had made important discoveries in the chemistry of dyes, began

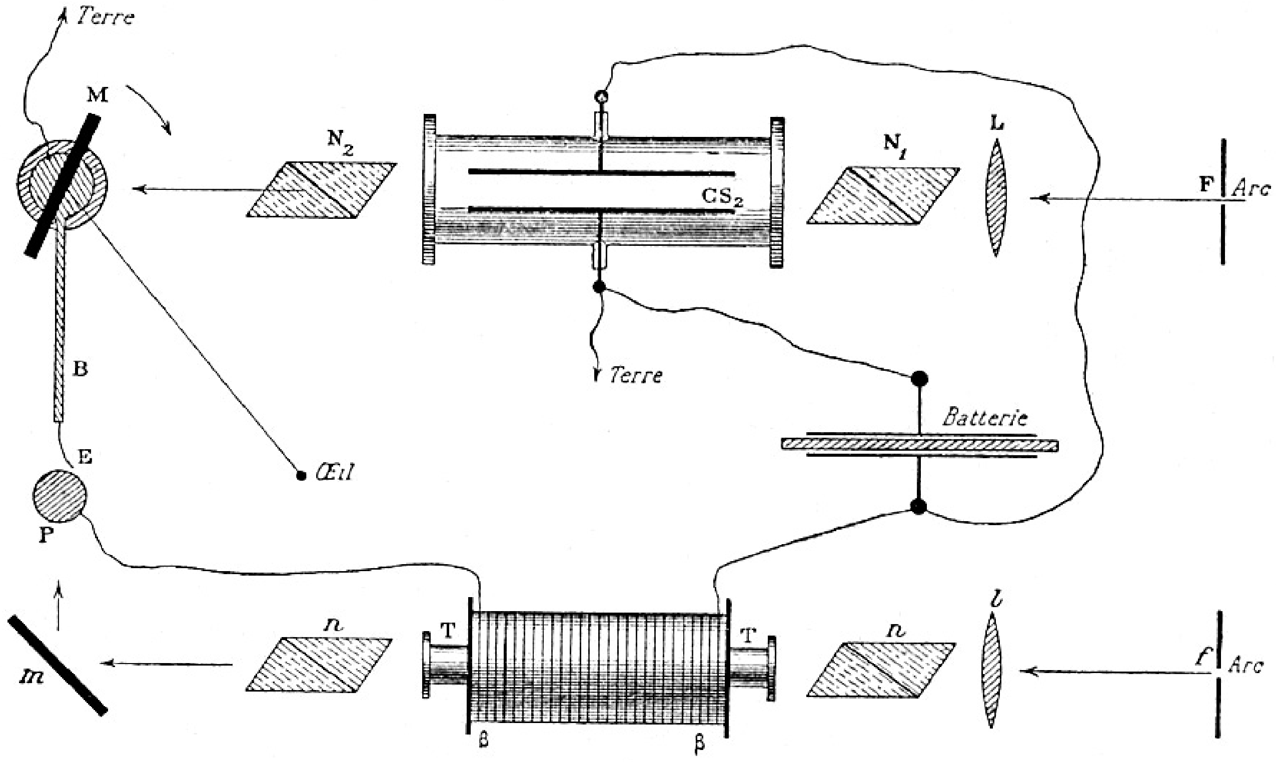

Figure 23-1. The upper part of the drawing shows an experimental setup for the Kerr electro-optical effect. Light arrives from the right through the Nicol prism N_1 and a glass vessel containing CS_2, but it stops in N_2 which is perpendicular to N_1. When a high-tension voltage source has been connected to the capacitor plates, part of the light can reach the mirror M. Blondlot (1888) is testing here whether this effect has a shorter time constant than Faraday's magneto-optical effect (in the lower part of the drawing).

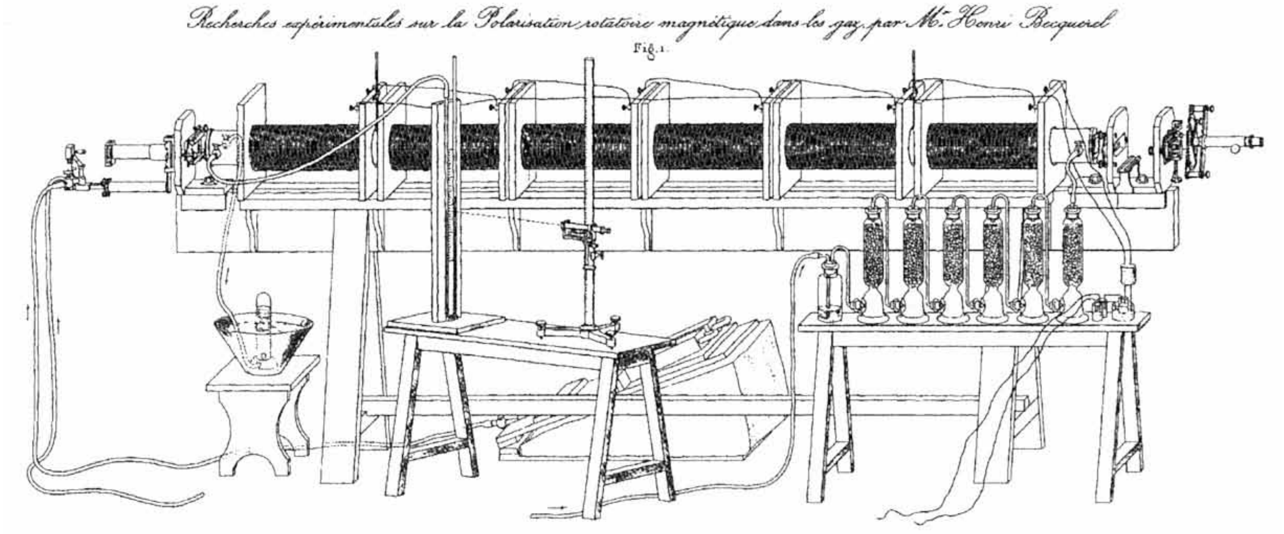

Figure 23-2. Becquerel's (1880b) instrumentation for measuring the Faraday effect in gases. On the left we see a gas-flame light source and "un très beau prisme de Nicol", 4.5 cm square. The optical rotation is measured with another Nicol prism on the right, after nine trips along the tube which is 3 m long and tightly wound with current-carrying wire.

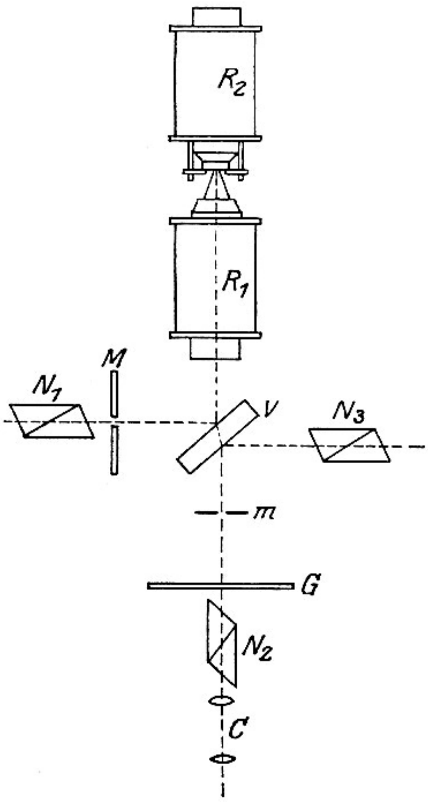

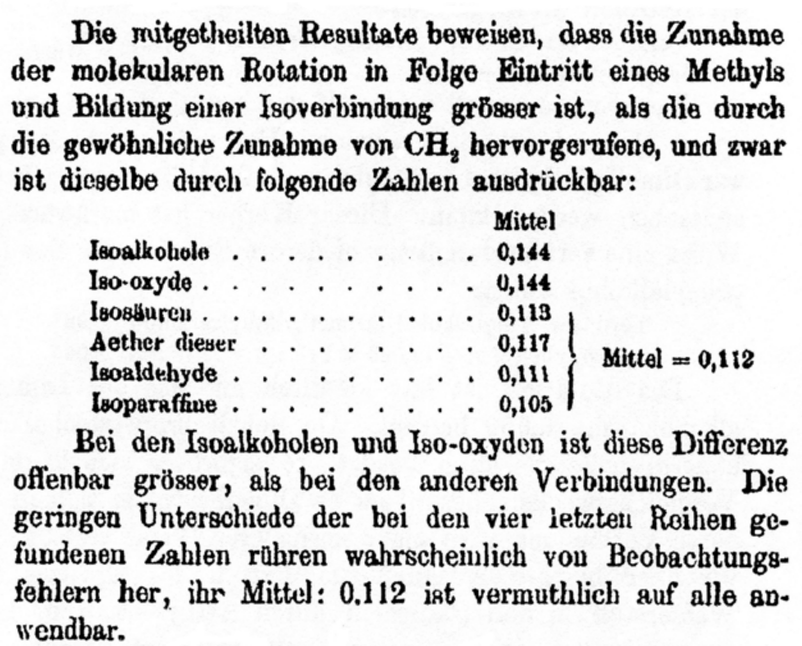

Die mitgetheilten Resultate beweisen, dass die Zunahme der molekularen Rotation in Folge Eintritt eines Methyls und Bildung einer Isoverbindung grösser ist, als die durch die gewöhnliche Zunahme von CH_2 hervorgerufene, und zwar ist dieselbe durch folgende Zahlen ausdrückbar:

	Mittel	
Isoalkohole	0,144	
Iso-oxyde	0,144	
Isosäuren	0,113	Mittel = 0,112
Aether dieser	0,117	
Isoaldehyde	0,111	
Isoparaffine	0,105	

Bei den Isoalkoholen und Iso-oxyden ist diese Differenz offenbar grösser, als bei den anderen Verbindungen. Die geringen Unterschiede der bei den vier letzten Reihen gefundenen Zahlen rühren wahrscheinlich von Beobachtungsfehlern her, ihr Mittel: 0.112 ist vermuthlich auf alle anwendbar.

Figure 23-3. *Left:* One of many experiments of Righi (1885, 1886) on aspects of Kerr's (1877, 1878) magneto-optical effects. Three Nicol prisms, the quarter-wave plate m, and the glass plate V are used in measuring the rotation of the plane of polarization in a beam of light upon reflection from the polished iron pole of the electro-magnet R_2. *Right:* A table of results on the Faraday effect (in sodium light) for various organic compounds, showing that the effect increases in a systematic way with each CH_2-group added to their molecules (Perkin 1884). Such observations could be of both theoretical and practical value.

in the early 1880s to perform independent research on the Faraday effect in many hundreds if not thousands of pure organic chemicals. Little work had been done on these previously, except by De la Rive (1871). Perkin (e.g. 1884, 1896, Fig. 23-3) published several large articles on his measurements which for instance revealed a simple relationship between the number of CH_2-groups in a molecule and its rotational (Faraday) effect upon polarized monochromatic light in a magnetic field. He also contemplated the interpretation of these results in terms of molecular structure, and one colleague wrote in a letter to him in 1906: "You created a new branch of science" (according to the entry on Perkin in D.S.B.). Among others carrying out research on this phenomenon were Schönrock (1893, in many organic liquids and salt solutions) and H. Becquerel (1877, 1880b, Fig. 23-2) in scores of solids, liquids and gases.

In the time interval considered here, research on the dispersion of the Faraday effect was carried out by Schaik (1882, glass and water), Joubin (1889, CS_2 and creosote) and others. Sohncke (1886) demonstrated that the magnetic field caused materials to act upon unpolarized light in quite the same way as already established for linearly polarized light.

The above electric and magnetic effects no doubt encouraged new discussions on the nature of light, probably leading to increased support for Maxwell's electromagnetic theory. As an example, the first scientific paper of G.F. FitzGerald (1877) concerned the Kerr magnetic effect; FitzGerald soon became a proponent of Maxwell's theory. See more on these matters in sections 28.4 and 30.2.

24 The Iceland spar quarry, 1879-95

In 1875-76, the authorities in Iceland negotiated unsuccessfully with C.D. Tulinius on the continuation of his lease of the Helgustadir quarry (cf. a letter to the Governor of Iceland printed in the Stjórnartídindi B Gazette, 16 Dec 1876). Not much seems to have happened in the following years, until the Parliament voted in 1879 to permit the purchase of the ¾ parts of the Helgustadir farm for up to 16,000 kr. Legislation to this effect was issued in September. The price was paid directly to a wholesaler in Copenhagen, to whom Tulinius owed money. Tulinius made the Government an offer dated 7 Oct of the same year, that he would operate the quarry and organize the sales of its products for a certain fee, but this fee was considered far too high.

One more evaluation by F. Johnstrup of matters regarding the Helgustadir site is dated 18 May 1881. He is of the opinion that Tulinius had removed "quite extraordinarily large quantities" of optical crystals from there, especially in the final year of his lease (i.e. 1872), and that his stockpile had been sufficient to supply the market since then. This view is echoed for instance by Merrill (1901, 1905). Johnstrup states that no one knows the size of Tulinius' remaining stock, and neither could he find out how much of it was being sold annually. He suggested that the quarry should be operated every fifth year. During the summer of 1881, it was visited by the Norwegian geologist A. Helland (1884) who described it briefly, with a drawing, in a paper on the geology of Iceland.

It was decided that Iceland's first geologist, Thorvaldur Thoroddsen, should travel to East Iceland in 1882 to resume mining operations. These plans were mostly dropped (cf. report from Thoroddsen dated 8 Nov 1882, in the National Archives), both on advice from Johnstrup and because of difficult conditions such as a measles epidemic and very adverse weather. However, Thoroddsen arranged for the recovery of a quantity of crystals which were exported in 13 boxes and sold through Johnstrup to the optician F. Schmidt in Berlin in late 1883. It seems likely that this Schmidt is the one who in 1864 had become a partner in the firm Franz Schmidt & Haensch. The proceeds did not cover the costs of this test operation, and Thoroddsen in fact states in his report that he does not believe that the quarry can be run profitably. Thoroddsen (1958-60) quotes Tulinius telling him that he had himself exported in total 280 tons and his predecessor Svendsen 50 tons, mostly of inferior quality.

In the year 1885 another mining attempt was made on behalf of the government. Various documents relating to it survive in the National Archive, including lists of tools and of wages paid to local laborers (Kristjánsson 2003). T. Gunnarsson, a noted entrepreneur and politician, directed these efforts (cf. vol. IV of his biography by B. Jónsson, published in 1990). The material recovered was sold in commission through the laboratory-supplies firm of H. Struers in Copenhagen (which had bought 20 kg in 1884, through Johnstrup), mostly in the years 1886-90. Garboe (1961,

p. 340) states that Struers for a long time was offering Iceland spar from a small stock he kept, even from 1871 (although his firm was not founded until 1875).

It is likely that other parties than the State collected some crystals from the Helgustadir quarry in the period 1879-90. Thus, Sède (1884) mentions that in the year 1883 a good piece of 8 x 6 x 2 cm size was offered for 4 kr. at the site. According to Eiriksson (1930), some transparent crystals weighing 2-300 kg were recovered and sold for tens of thousands of kronur in 1886-91. Labonne (1887) who passed through in 1887 was of the opinion (as was Helland in 1881) that plenty of crystals still remained there. According to his account, C.D. Tulinius was leasing the quarry at this time: I have not seen contemporary evidence supporting this, but the newspaper Thjódólfur on 29 Sept. 1910 indicates that Tulinius and his son Thorarinn did lease it for some unspecified time interval between 1880 and 1910. Finally it may be added that Bréon (1882) in the year 1880 took a look at the calcite outcrops in Djúpidalur in NW-Iceland which O. Olavius had inspected a century before. Bréon writes that the calcite in the Djúpidalur outcrops is generally opaque, but if that condition turns out to be caused by weathering then these outcrops may perhaps replace the Helgustadir site when depleted.

Haensch (1889) quotes the above-mentioned equipment dealer H. Struers in Copenhagen as saying that Danish authorities intend to send an expedition to Iceland in 1891 to collect a large quantity of spar. I have no further information on these plans. In the Parliament of Iceland in 1891 a Government bill was tabled, authorizing the sale of the quarry (as an entity separated from the Helgustadir farm). In explanatory notes appended to the bill it is revealed that the operations in 1882 and 1885 returned very little profit, and that Prof. Johnstrup advises asking the major constructors of optical instruments for bids on leasing the site. This bill was rejected.

25 The “spar famine” in 1884-1920, cf. quotes in Appendix 1

Past 1880, the supply of Iceland spar appears to have satisfied demand, although for instance Ladd (1874) and Laurent (1877) who needed large prisms from it, had to manage with smaller pieces glued together. Thus, the well-known instrument maker A. Hilger advertises in the astronomical journal The Observatory in 1880-82 that he has a selection of prisms (probably triangular ones) for sale (Fig. 25-1). After 1882 he does not advertise any Iceland spar in that journal, and around 1884 complaints begin to appear regarding a shortage of spar for the purposes of research and equipment manufacture. Sentences from various sources of such complaints have been assembled in Appendix 1A. The president of the Royal Society of London, G.G. Stokes who himself had made important discoveries in optics as noted above, wrote a letter to the Minister for Iceland, dated in July of 1886. The letter, preserved in the National Archive, is reproduced in Appendix 1C. Here he points out that Iceland spar used to be easily available in Britain, but a dearth of the material in recent years is causing great problems. Stokes implores the government to re-open the quarry; perhaps pieces previously rejected might be found around the mine and sold to offset initial costs. The letter was accompanied by a translation made by his friend Eiríkur Magnússon in Cambridge. In the Parliament session of 1887, a motion to allow Eiríkur to recover up to 500 pounds of crystals at Helgustadir was tabled but not discussed or voted upon.

Labonne (1887) writes that in France there are great worries about the limited availability of Iceland spar. Towards the end of that year, German earth-science journals (cf. Zeitschr. Deutsch. Geol. Gesellsch. 1888) report that the office of the German Chancellor is making enquiries to authorities in Iceland and in the U.S. about Iceland spar at the request of instrument manufacturers. According to the journals, optical-quality crystals of calcite are very seldom found outside of Iceland. In response to these enquiries, T. Thoroddsen (1889, 1890) published articles that appeared at least in Danish and German. Here as well as in his later books, Thoroddsen pins his hopes on Djúpidalur as a possible new source of spar crystals.

H. Haensch (1889), addressing a meeting of German manufacturers, informed them that the previous enquiries made by the Chancellor’s office had not resulted in any new Iceland spar appearing on the market. The situation was becoming serious for the workshops involved, as well as for the sugar industry and others. A motion was passed at the meeting, strongly urging their government to intervene in the matter. The participants guaranteed that they would buy a considerable amount of crystals if material of sufficient quality could be procured.

J. L. Hoskyns-Abrahall (1890) from Britain made a detour in his journey to Iceland in 1889 to inspect the quarry, at the request of H.G. Madan (mentioned above) who was concerned about “the difficulty of obtaining large pieces of clear calcspar for optical purposes”. He writes that Thor E. Tulinius (a son of C.D. Tulinius) who resided in Copenhagen from 1887 and set up his

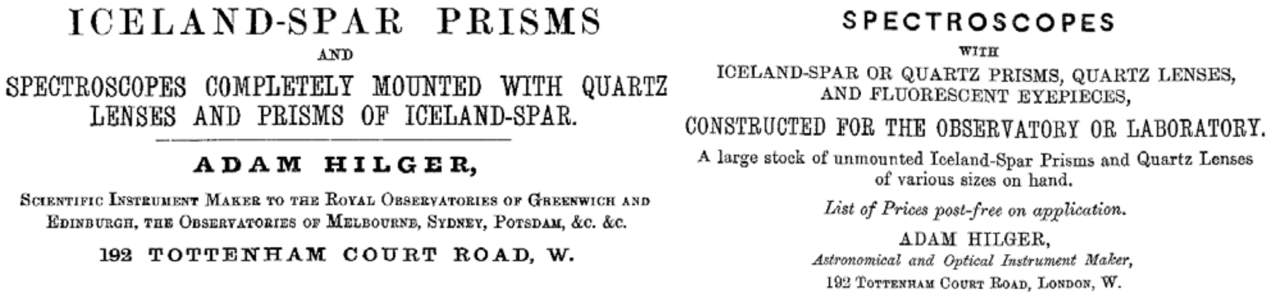

ICELAND-SPAR PRISMS
AND
SPECTROSCOPES COMPLETELY MOUNTED WITH QUARTZ LENSES AND PRISMS OF ICELAND-SPAR.

ADAM HILGER,

SCIENTIFIC INSTRUMENT MAKER TO THE ROYAL OBSERVATORIES OF GREENWICH AND EDINBURGH, THE OBSERVATORIES OF MELBOURNE, SYDNEY, POTSDAM, &C. &C.

192 TOTTENHAM COURT ROAD, W.

SPECTROSCOPES
WITH
ICELAND-SPAR OR QUARTZ PRISMS, QUARTZ LENSES, AND FLUORESCENT EYEPIECES,
CONSTRUCTED FOR THE OBSERVATORY OR LABORATORY.

A large stock of unmounted Iceland-Spar Prisms and Quartz Lenses of various sizes on hand.

List of Prices post-free on application.

ADAM HILGER,
Astronomical and Optical Instrument Maker,
192 TOTTENHAM COURT ROAD, LONDON, W.

Figure 25-1. These advertisements for Iceland spar prisms, from the well-known instrument maker A. Hilger, appeared in the astronomy journal The Observatory in 1880 and 1882 respectively. At that time he was also offering triangular prisms of up to 5” size, and spectroscopes with six prisms. Soon after 1882 however, the supply of Iceland spar declined.

own business in 1889, is selling crystals from his father’s stock. Fr. Johnstrup in an 1890 letter preserved in the National Archive, appears to believe that the last of the stock from 1863-72 was disposed of in 1889.

It is likely that during this time of shortage, instrument makers acquired Iceland spar by for instance purchasing spare specimens from museums (Beckenkamp 1915). Garboe (1961, p. 503) mentions that the Mineralogical Museum in Copenhagen was one of those approached, but he does not provide additional details. It was also fairly common for large private collections of minerals to be auctioned off, say in case of death or bankruptcy of the owners. Advertisements of such events might appear in journals like the Neues Jahrbuch für Mineralogie or in newspapers; thus, auctions including optical apparatus, Nicol prisms and Iceland spar were announced in The Times e.g. on 2 July 1885 and 25 Nov 1887.

Grosse (1890, see Appendix 1A) states that Iceland spar prisms have become expensive, as 95% of the raw material is wasted in making them. Beckenkamp (1915) and others iterate that large clear spar crystals have only been obtained from Iceland, while specimens from other localities may be used for making small Nicol prisms. These localities possibly included some in Germany such as Auerbach an der Bergstrasse (Gumlich 1894); in 1895 R. Scheibe exhibited two Nicol prisms made of Auerbach calcite (not of sufficient quality for precision instruments) at a meeting of the German Geological Society. Reasonably good pieces were also found in the Crimea region of Russia shortly before the turn of the century. More on these matters in chapter 32 and in Appendix 1A, 1B.

26 Iceland spar and chemical research, especially in 1840-1915

Chemists have been steadily improving their analytical methods, and in these it is of course imperative to know precisely the atomic weights of the various elements. Measurements of atomic weights could be inaccurate if the compounds used were derived from impure raw materials; for instance Dumas (1842, p. 546) proclaims that in such determinations one has to “make analyses or syntheses on a large scale, operating with simple reactions of very pure compounds.”. A similar view is expressed by Marchand and Scheerer (1850).

As regards calcium, results of measurements of its atomic weight were somewhat variable in the period 1840-1900, fluctuating between 39.96 and 40.22 (on the basis of oxygen = 16). In these attempts, Dumas (1842), Erdmann and Marchand (1842, 1844, 1850) and probably some others employed Icelandic calcite as their source of calcium. Dumas‘ assistant J.-S. Stas became very productive in atomic weight determinations during the second half of the 19th century. I have not read his publications except for one paper published posthumously (Stas 1892). In chapters V-VI of that paper it is revealed that he did make use of Iceland spar to a considerable extent when preparing samples for spectral analysis.

In an 1898 report of a committee on atomic weights, organized at the initiative of the German Chemical Society, the weight of calcium was merely listed as 40 (Ber. Deutsch. Chem. Gesellsch. 31, 2761-2768). At that time, debate was still going on regarding the validity of W. Prout’s hypothesis dating from 1815, which postulated that all atomic weights were integer multiples of that for hydrogen.

In a special investigation of the atomic weight of calcium, Hinrichsen (1901) emphasizes that in his analyses he only employed some crushed pieces of Iceland spar. From these and other published investigations (see Appendix 2) it is clear that the Icelandic material is very pure calcium carbonate, containing less than 0.1% of other elements. In particular it was quite free of crystal water, which caused problems in the use of most other calcium minerals from nature or of man-made compounds for this purpose. The result obtained by Hinrichsen (1901) was 40.142. At a similar time, T.W. Richards (1902) announced a preliminary value of 40.126 for calcium from marble. The committee mentioned in the previous paragraph (which in the meantime had been raised to international status) therefore changed its listed value to 40.1 (Ber. Deutsch. Chem. Gesellsch. 34, p. 4384, 1901). Shortly thereafter, Hinrichsen (1902) repeated his measurements using Iceland spar from the Crimean peninsula. Now he obtained 40.136 but he appears to have had more faith in his earlier result. An atomic weight value of 40.09 for Ca was approved by the international committee in 1909 (see Rev. Gén. Sci. 24, p. 102-103) and 40.07 in 1912 (see J. Prakt. Chemie 85, p. 93) in agreement with a new determination by Richards on calcium salts. Oechsner de Coninck (1911) obtained 40.06 from a measurement using Icelandic material. The committee finally settled on 40.08.

From bibliographies on the Internet and other sources such as Hughes (1931, 1937) and Fries (1948, p. 131) it is clear that Iceland spar found wide use among chemists from around 1860 (cf. Zeitschr. Anal. Chemie 41, p. 145, 1902) until 1960 or even later. Much of this material may have been leftovers from the production of Nicol prisms. Iceland spar did play some role in measurements of the atomic weight of fluorine (Louyet 1849), chlorine and boron (Laurent 1849) and, indirectly, magnesium (Marchand and Scheerer 1850). In papers on new or modified procedures for the analysis of carbonates it is sometimes stated that the authors (e.g. Jäger and Krüss 1888) used samples of Iceland spar for the testing of their methods.

Besides, Iceland spar was often useful in the standardization of solutions in inorganic analysis, physical chemistry, and biochemistry. Bornträger (1892) calls it "a prime titration substance for the control of nitric or hydrochloric acid". D.O. Masson (1900) advises chemists to measure the concentration of for instance hydrochloric acid by the amount of Iceland spar ("probably as pure a substance as any that the chemist deals with") it dissolves. According to Masson's 1938 obituary, the method was in common use; it is also described by Thiele and Richter (1900) and at least three advanced textbooks of analysis. Thiele and Richter state that cleavage pieces of clear doppelspat from Iceland are easily available from dealers, and for instance the equipment-supply house of A.H. Thomas in Philadelphia includes „Iceland spar, for standardizing" in its 1914 catalog of chemicals. Other examples where Iceland spar played a role in chemical research include work by Wagner (1870, test of new method for determining gaseous carbon dioxide), Crookes (1885, notable research on the spectra of rare-earth metals), Lemberg (1887, demonstration of a microchemical procedure), Heidenhain (1896), Brunck (1906), Blanc and Novotný (1906, production of caustic soda), Rose (1909), J.I.O. Masson (1911), Dodge (1915, standardization of solutions), Winkler (1916, measurement of the calcium content of potable water), Foote and Bradley (1926), Willard and Boldyreff (1930, determination of calcium), and Dittler and Hueber (1931, testing of methods to measure carbonic acid in rock).

Knowledge of the chemical equilibria between calcium oxide, carbon dioxide, calcite and/or water under different conditions is important for instance in various industrial processes, as well as in agriculture, hydrology, oceanography, and in research on the geochemistry of limestone strata. Many scientists have written on their experiments in these fields and on the interpretation of the results in the light of thermodynamic principles. Among those who specify that Iceland spar was employed in their experiments, are Raoult (1881), Kendall (1912), Prideaux (1915), Smyth and Adams (1923), and Miller and Witt (1929). It is quite possible that this was also the case in other comparable projects where the origin of calcite samples is not stated.

Around 1890, chemists were discussing whether the well-known ability of strong electrolytes to dissolve other substances depended on some water being present. One experiment for testing this matter was carried out by Hughes and Wilson (1892) who exposed Iceland spar to very dry hydrogen chloride gas at 100°C for long periods of time. The gas then turned out to be rather ineffective.

27 Various research subjects involving Nicol prisms, around 1900

In the decades around the turn of the century, optics was a popular field within the natural sciences. Polarized light was a key component in many well-known books published before 1900 on optics in general (e.g. Beer 1882, Verdet-Exner 1887, Basset 1892, Mascart 1889-93, Dufet 1898-1900) as well as on specialized topics like crystal optics (e.g. Pellat 1896, Becker 1903) and optical activity (Landolt 1898, Fig. 27-6, and others). A wide range of polarizing equipment for student experiments and demonstrations was available (Pellin 1899, Ernecke 1902, Kohl 1909). Optical research also made great strides; several important fields where Nicol prisms were involved, will be described briefly in this chapter.

27.1 Scattered light, and the color of the sky

From F. Arago's discovery of the polarization of light from the clear sky in 1809 and until the 1860s, many scientists studied it with a variety of polariscopes. The blue color of the sky and the polarization (which varies depending on the Sun's altitude and on the viewing direction) were even called "the two great standing enigmas of meteorology". Some made very comprehensive surveys of the polarization, such as Rubenson (1864). Others proposed theoretical explanations and connections with the intensity of the sky light, including R. Clausius (1847, and later) who is better known for his contributions to thermodynamics.

J. Tyndall (Fig. 27-1) who has already been mentioned in sections 16.1 and 17.1, was keen on finding explanations for various physical phenomena, anywhere between heaven and Earth. Among other things he published a lecture that he had given on Icelandic hot springs (Tyndall 1853); as I am not aware that he visited this country himself, the lecture probably is based on observations by people like G.S. Mackenzie, R. Bunsen and H. Holland. It may be pointed out here that Tyndall describes the water in the great Geysir's bowl as being "the purest azure" in color; in fact the hot springs probably had inspired Bunsen (1849) to be the first scientist to study the color of water. One topic of interest to Tyndall (1869a,b, 1870a) concerned the interaction of light with the molecules of the atmosphere, including those of water vapor and other minor constituents. He produced vapor clouds from various compounds (including butyl nitrite, isopropyl iodide and other organic chemicals) as well as smoke from incense, gunpowder, tobacco, etc., in a glass tube illuminated with a beam of white light. If the particles of the vapor or smoke were sufficiently small, the light emanating sideways from them was beautifully blue like "the purest Italian sky". Using Nicol prisms and other apparatus he also made some unexpected observations, such as finding that the light from these clouds was in some cases linearly polarized (Fig. 27-1) even if the incoming beam was unpolarized. Govi (1860a) had in fact pointed this out earlier. When the

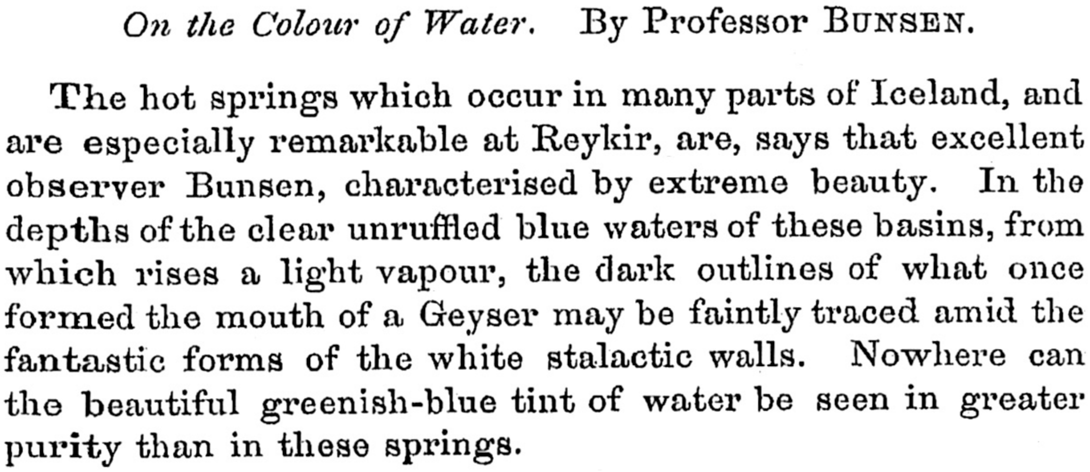

On the Colour of Water. By Professor Bunsen.

The hot springs which occur in many parts of Iceland, and are especially remarkable at Reykir, are, says that excellent observer Bunsen, characterised by extreme beauty. In the depths of the clear unruffled blue waters of these basins, from which rises a light vapour, the dark outlines of what once formed the mouth of a Geyser may be faintly traced amid the fantastic forms of the white stalactic walls. Nowhere can the beautiful greenish-blue tint of water be seen in greater purity than in these springs.

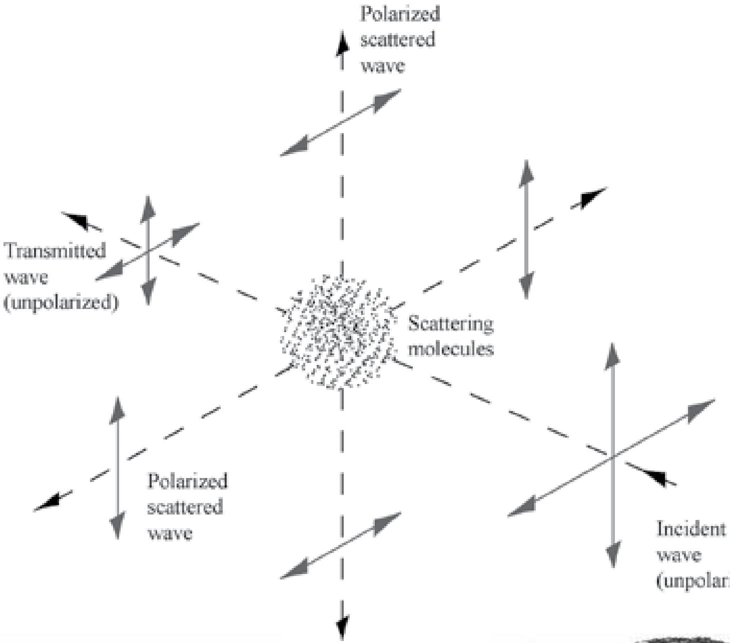

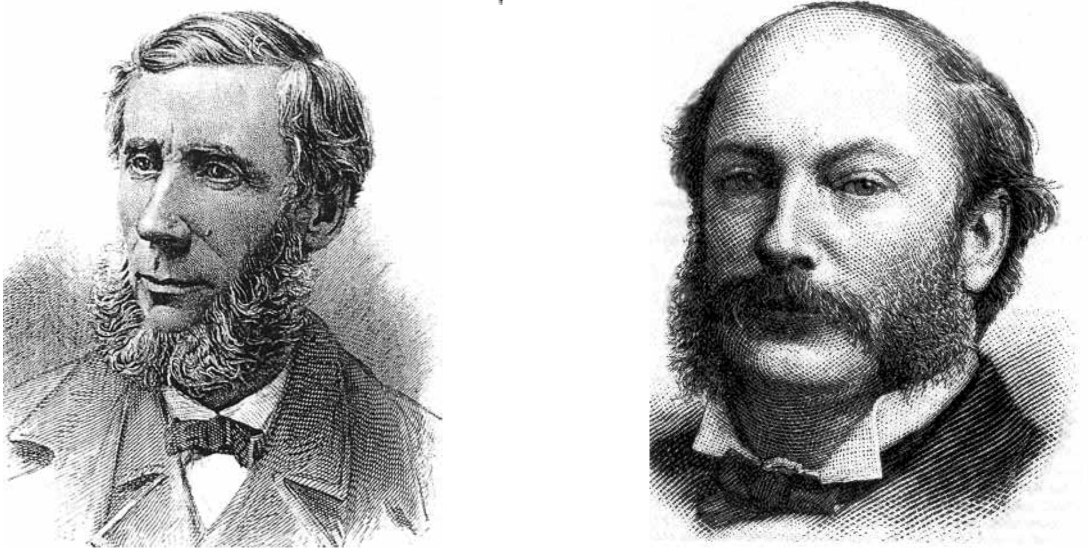

Figure 27-1. The *top* item is the beginning of a paper by Bunsen (1849) which among other things discusses the blue color of water in Icelandic hot springs. J. Tyndall (1820-1893, *bottom left*) demonstrated in 1869 that light scattered to the side from smoke or fine dust, is bluish and linearly polarized. See the central explanatory diagram which is redrawn from G.R. Fowles: Introduction to Modern Optics, 1975. The diagram is greatly simplified: the light is in fact scattered towards all possible directions. J.W. Strutt (later Lord Rayleigh, 1842-1919, *right*) published important theoretical results on the scattering of light by small particles in 1871 and later.

particles increased in size, both the bluishness and the polarization gradually disappeared (cf. ordinary clouds). The same happened with fine dust suspended in water, but Tyndall (1869b, 1870a) does not refer to the Icelandic hot springs in that context and some (Busch and Jensen 1911, p. 109) claim that his experiments had been prompted by observations of smoke from peat fires in Ireland. The polarization was later called "the most interesting property of turbid media" (Verdet-Exner 1887, p. 404), and it is generally acknowledged (see Rev. Gén. Sci. 13, 1902, p. 59-60) that Tyndall's experiments on this aspect provided the key to solving the blue-sky mystery. Lallemand (1869) found that light scattered laterally from within various pure transparent liquids and solids was plane-polarized. He correctly concluded (see Stuart 1936) that in his experiments the molecules of the material itself were responsible for the scattering, while others (e.g. Soret 1869) tended for decades to ascribe it to foreign particles, air bubbles and the like.

From his experiments, Tyndall concluded that the blue light from the sky was sunlight reflected off particles smaller than the wavelength of the light. J.W. Strutt (1871a; he became Lord Rayleigh in 1873, see Fig. 27-1) pointed out that this phenomenon was not comparable to ordinary reflection, and it was eventually given a special name: Rayleigh scattering. Strutt (1871a,b) made a new theoretical analysis of the probable response of such small particles to the effects of the passing light wave, obtaining the important result that the relative intensity of the scattered light increased inversely as the fourth power of its wavelength. Even though the aether theory still held the ground at that time, Strutt's result is still a valid approximation for the interaction of light with very small particles. He could also explain the polarization of the light scattered sideways, and he concluded that Fresnel's hypothesis on the vibration direction of the aether was preferable to that of Neumann. In addition to Tyndall and Strutt, J.L. Soret, A. Lallemand (1871) and E. Hagenbach were among those reporting investigations on the color of air and water around 1870. Other related phenomena were also studied: for instance, Soret (1874) demonstrated the existence of soot particles in a gas flame by means of the polarization of its light, and Tyndall himself applied his experience of scattered light to valuable work on particulate matter (such as bacteria) in the atmosphere in the 1870s. Rayleigh (1881a, 1899) showed that the polarization of light scattered from small particles could also be explained by Maxwell's electromagnetic theory. Various studies of the intensity, color and polarization of sky light were continued, e.g. by Wild (1876, Fig. 27-2) and Crova (1890), both of whom employed photometers with Nicol prisms. Hurion (1896) measured the attenuation and polarization of light in a turbid liquid with Cornu's photo-polarimeter, and Compan (1899) made similar measurements of attenuation with Crova's photometer. Compan's results agreed with the fourth-power law of Rayleigh for very small particles; for those of sizes comparable to the wavelength, a different relation proposed by R. Clausius around 1850 gave a better fit to the observations.

In 1900-20, many scientists investigated the intensity of scattered light and/or its polarization by laboratory measurements. This included research on gases (e.g. Cabannes 1915, Rayleigh jr. 1918), liquids (Spring 1899, Müller 1907, and others), metal particles in liquids (Ehrenhaft 1903, Steubing 1908, Paris 1915), and transparent solids (e.g. Siedentopf and Zsigmondy 1903, Rayleigh jr. 1919). Theoretical studies were also carried out, for instance by Mie (1908, metal particles). Many people such as Pernter (1901), Busch and Jensen (1911), Müller (1912) and Boutaric (1918) measured in detail the spectrum, polarization and attenuation of sunlight in the Earth's atmosphere. Of all these, at least Ehrenhaft and Boutaric used Cornu‘s (1882, 1890) photopolarimeter which contained Wollaston and Nicol prisms and was sold by the Duboscq-Pellin workshop. Additionally, the state of polarization of light from the Sun's corona was observed (e.g. by Wood 1900, Salet 1910) during many eclipses to 1920, in order to find out if this light was due to reflection, scattering, or fluorescence. These observations often employed Savart plates (from quartz or calcite) in addition to Nicol prisms.

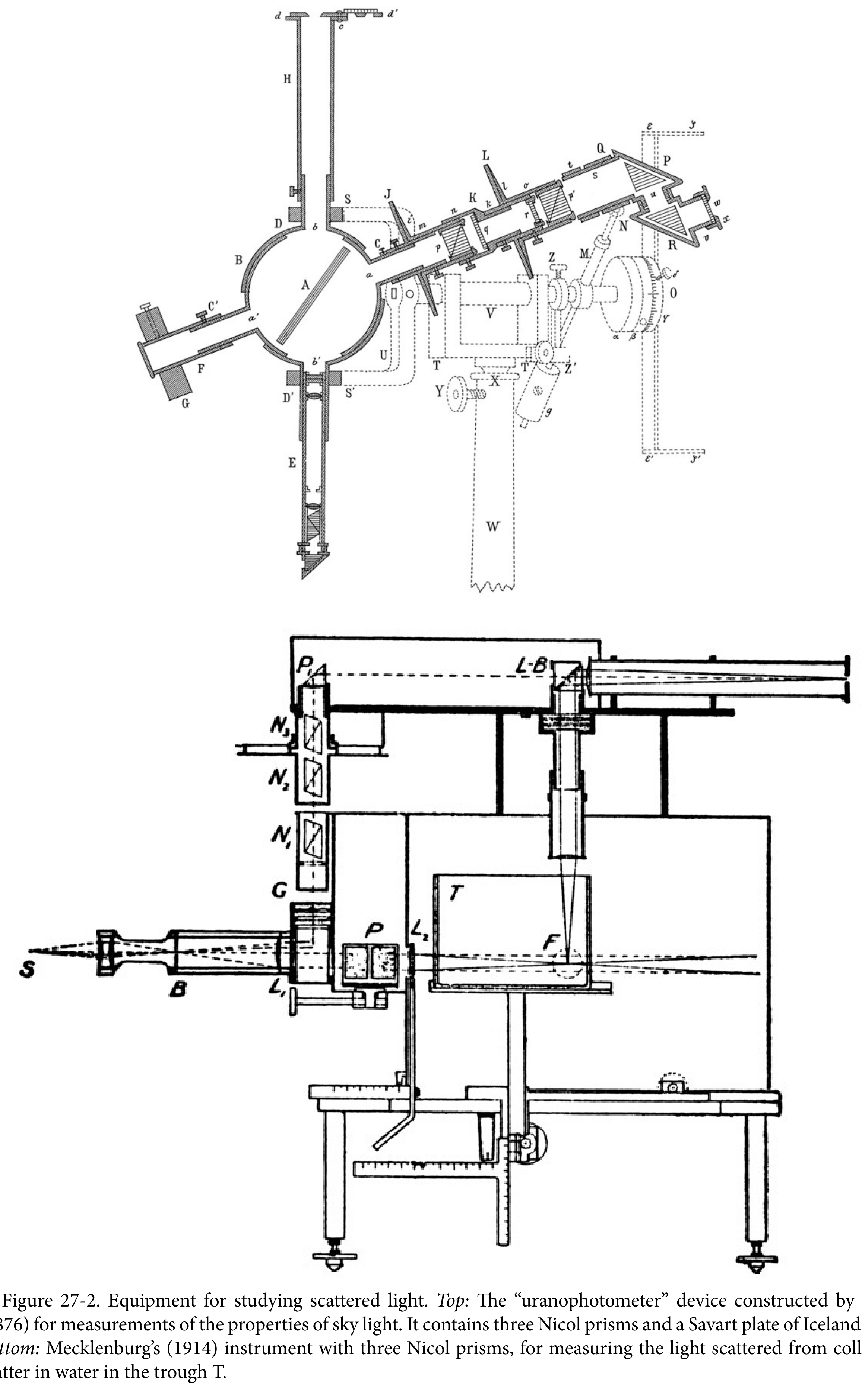

Figure 27-2. Equipment for studying scattered light. *Top:* The "uranophotometer" device constructed by Wild (1876) for measurements of the properties of sky light. It contains three Nicol prisms and a Savart plate of Iceland spar. *Bottom:* Mecklenburg's (1914) instrument with three Nicol prisms, for measuring the light scattered from colloidal matter in water in the trough T.

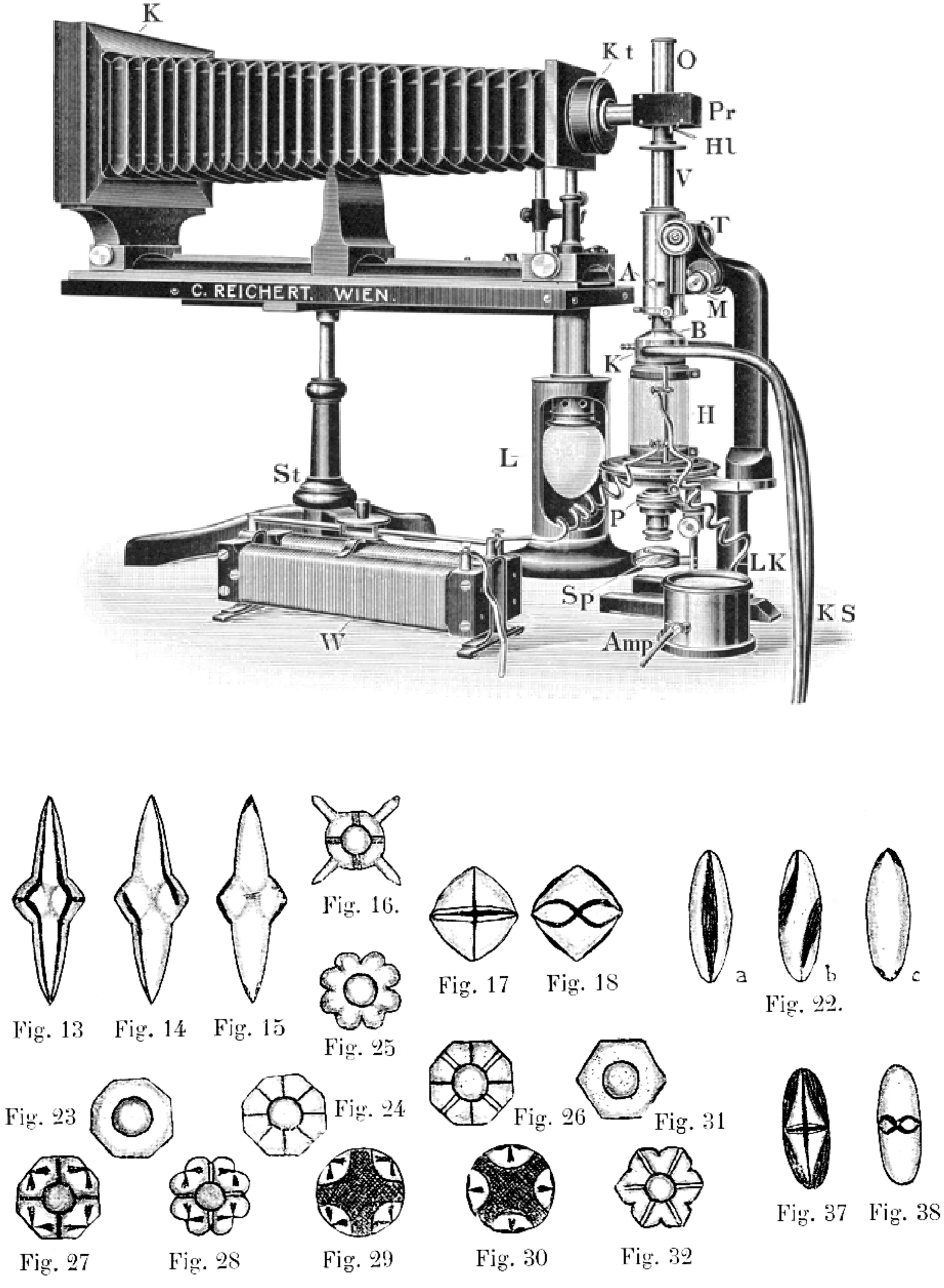

Figure 27-3. *Top part:* Research on the optical properties of natural and man-made minerals, liquid crystals and other materials required facilities for observing them at high and low temperatures. The occurrence of phase changes was of particular interest. Around 1900, descriptions appeared of several polarizing microscopes where the stage could be heated by a gas flame or an electrical current. The one shown here was designed by Doelter (1909), K is a camera. From Weinschenk (1925). *Bottom part:* Strange patterns exhibited by liquid crystal specimens, when viewed in a polarizing microscope under varying conditions. From Lehmann (1911-13), magnification not stated.

The paper by Cabannes (1915) just referred to, was the first one to report laboratory observations on scattering of light by pure air, but he did not study the polarization of the scattered light until later (Cabannes 1920, etc.). His efforts and those of Rayleigh jr. (1918) on seventeen gases were related to increasing support in the 1910s (see Martin 1920) for Lallemand‘s (1869) view that such scattering in a transparent substance was not only caused by dust or other inhomogeneities, but also by the molecules of the substance itself. It was shown that the attenuation of light due to the scattering could be used to estimate the number of molecules in a mole (i.e. Avogadro’s number, see Bruhat 1942, p. 287; Partington 1953, p. 242). Some such estimates were made, with varying success, both before R.A. Millikan’s measurements of the electronic charge in 1910-17 (section 36.4), and subsequently (e.g. Cabannes 1921).

Research on scattered light also became the basis of an important method, nephelometry, for studying suspensions. Here the scattered light is measured with photometers, which in a few cases contained Nicol prisms. See for instance Mecklenburg’s (1914, 1915) papers on a “Tyndallmeter” with three such prisms, Wilke and Handovsky (1913) on a meter with four prisms, and Weinberg (1921). Various interesting aspects of further developments regarding scattered light are treated in section 36.7.

27.2 Liquid crystals, from 1870

It should not be forgotten that natural minerals are merely a small fraction of all the compounds that can crystallize. Polarized light is a convenient and efficient way of studying man-made crystals. However, only a single example of such studies is described briefly in this section, and a few others will be considered in the latter part of section 29.1.

Around 1870, scientists began to look into the physical properties of certain organic substances which do not change between liquid and solid states at a fixed temperature, but stay in an intermediate configuration over a temperature interval of the order of 10°C or more. Among these are various soapy, waxy or greasy compounds such as “soft soap” produced for household use in past times. A special field of research concerned with these materials (Houben-Weyl 1955) is often said to have been born when the physical chemist O. Lehmann (1889) became acquainted with observations on them by the botanist F. Reinitzer. For studying this class of materials, it was appropriate to use a microscope with Nicol prisms and a heated stage, which Lehmann had invented earlier (section 22.4, Fig. 22-7). He had also fitted such a microscope with equipment for photography and for projection on a screen (Lehmann 1886b, 1910; Kohl 1909). An advanced setup of this kind is shown in Fig. 27-3; see more on heated stages in section 29.1. This research had its ups and downs to start with, and it encountered disbelief as the behavior of the materials was very odd. Doubly refracting drops of liquids were unheard of, and the microscopic specimens even sometimes resembled living cells. Lehmann (e.g. 1900, 1908, 1911-13, Fig. 27-3) did not give up but published tens of papers on his observations up to around 1920. In the 1900 paper for instance, there are 169 color drawings of drops as they appeared in Lehmann’s polarizing microscope under varying conditions; later, he took movies of them. Gradually, other scientists (Gattermann and Ritschke 1890, Schenck 1899, 1905, Mauguin 1911, Stumpf 1912, etc.) realized that he was dealing with a significant physical phenomenon, and Rinne (1922b) calls the discovery and preparation of liquid crystals “one of the finest achievements of science”.

The intermediate-state materials which were given the name “liquid crystals” consist of large elongated molecules and are very anisotropic. Thousands were known already by 1940, and they have now been classified in various ways according to their internal structure. Polarized light continued to be very useful in this work (Gaubert 1905; Vorländer 1908; Wien-Harms 1928, and

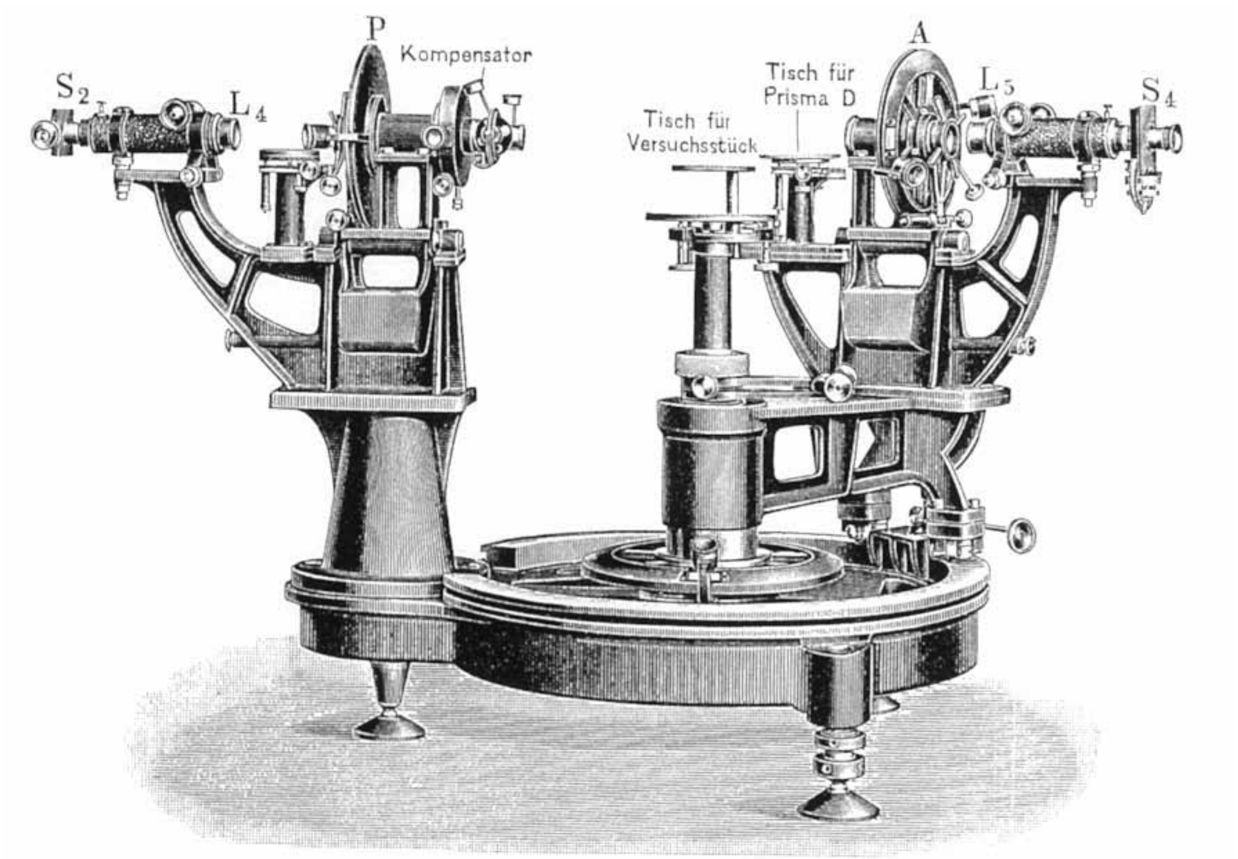

Figure 27-4. Polarized light has for more than a century had important applications in the inspection of internal stresses in glass. One instance concerns the lenses and prisms intended for use in precise instrumentation, as well as the end-plates of polarimeter sample tubes. The figure shows the testing apparatus of Schulz (1912).

many others), and it still is “the most powerful tool for investigating liquid crystals, all of which exhibit characteristic optical properties” (Van Nostrand 1989). These properties include extremely strong optical activity (with rotations even exceeding 50,000°/mm!) and circular dichroism. Some liquid crystals become doubly refracting in an electric field (e.g., Björnståhl 1918) which from around 1970 has been a basis for their utilization in displays for digital watches and instruments, later in screens for television sets and computers.

27.3 Photo-elasticity, 1880-1920 and later; flow birefringence in liquids

The double refraction effects that can be brought about in isotropic solids by pressure, do not seem to have been investigated much for 2-3 decades following the work of Wertheim, Maxwell and others in the 1850s (section 15.3). The topic also was not given much attention in books on optics. Lepinay (1880) confirmed Wertheim’s (1851) conclusion that the effect of pressure on light velocity in some (but not all) types of glass was almost independent of the wavelength of the light. Kerr (1888, 1894), Carus-Wilson (1891), Marston (1893), Pockels (1902), and W. König (1903) also carried out research in this field. Pockels found that some of Neumann’s (1843) theoretical results on the subject needed revision. Pockels (1889, 1903) also analyzed measurements made on refraction in crystals (quartz, fluorite and Iceland spar) under pressure, using theoretical formulas for their elastic parameters. Beaulard (1893) studied the effects of pressure on the optical properties of quartz. König (1901) investigated double refraction in a vibrating glass plate, for comparison with older theoretical and experimental studies. Ewell (1903) applied a twisting torque to cylinders of jelly, and studied the optical activity it produced. In this kind of research, it was eventually found that it was easier to make test objects from new transparent isotropic materials such as celluloid (from 1906) and bakelite (from about 1920) than from glass.

Around 1910, engineers began to realize the potential of polarized light in studies of stress in components of buildings and machinery, using two-dimensional transparent scale models. The method came to be called photo-elasticity. As has been touched on in section 15.3, white linearly polarized light from a Nicol prism was sent through such a model and then through another Nicol prism (crossed with the first, as in a petrographic microscope). To an observer, a pattern of two different kinds of fringes was then seen in the model. One set was composed of black "isoclinics", passing through all points where the two orthogonal principal stresses have directions parallel to those of the Nicol prisms. The other set was colored "isochromatics", connecting points in the material with the same difference between the principal stresses. The frequency-dependent delay of one polarized component of the light relative to the other is constant along an isochromatic. If circularly polarized light is used, the former fringes disappear.

Mesnager (1901), Coker (1910, 1912, 1916, 1923, etc.) and Filon (1907, 1912, etc.) used photoelastic techniques to test general theoretical hypotheses relating to the strength of materials. They also investigated many specific cases of internal stresses that were important in engineering design, see e.g. in Fig. 27-5. Mesnager (1913) famously constructed a glass model of a reinforced-concrete bridge to be built across the Rhône river, in order to visualize stresses in it by means of polarized light. A comprehensive book by Coker and Filon (1931) did much to increase the interest of scientists and engineers in the method. As stated in the book's preface: "The practical importance of photo-elasticity to the engineer can hardly be overrated. It provides him, as no other existing method does, with an immediate practical solution of fundamental problems concerning the stresses in the elements of structures and machines, which cannot be otherwise directly observed and which are usually beyond the reach of calculation.".

Some large laboratories, operated by the General Electric and Westinghouse companies as well as by universities like M.I.T. started carrying out applied research in photo-elasticity in the early 1920's (Kimball 1921, Fig. 27-5, Heymans 1922, Delanghe 1928). Delanghe describes examples of the optical technique being used in observing tensions in plates with rivet holes, in fasteners for cables, and in cogwheel teeth. In the preface to the two-volume monograph by Frocht (1941, 1948, Fig. 27-5) it is reiterated that this research has been of enormous practical value, because calculations of stress fields in objects are very complicated and people previously could only estimate the mean stress within sizable areas in these. The objects however will break at points where the actual stress, not the averaged stress around them, reaches a critical value. Frocht presents an overview of the very varied research going on in photo-elasticity, and of the apparatus employed. At the time of writing of his first volume, monochromatic light was being generally preferred to white light; Nicol-prisms seem still to be widely used, but glass reflectors (Fig. 27-5) and Polaroid sheets (from c. 1935, see Grabau 1938 and section 35.2) often replaced them when large pieces were being tested, because of the limited field of view of the prisms.

After 1960 or so, digital computers made it possible to calculate stress values accurately in ever more complex situations; equipment like resistive strain gages and interferometry was brought in to check the calculations. In these cases the role of static polarized-light observations on transparent models was less important than before, but new applications of the photoelastic techniques were also emerging. Such applications included research with movie cameras and stroboscopes on rotating or vibrating pieces, shock waves, propagation of cracks, plastic deformation, and so on (Föppl and Mönch 1959).

It was known since 1814 (see section 7.3) that when glass is cooled rapidly or unevenly from a molten state, internal stresses arise which make the glass doubly refracting. This was investigated

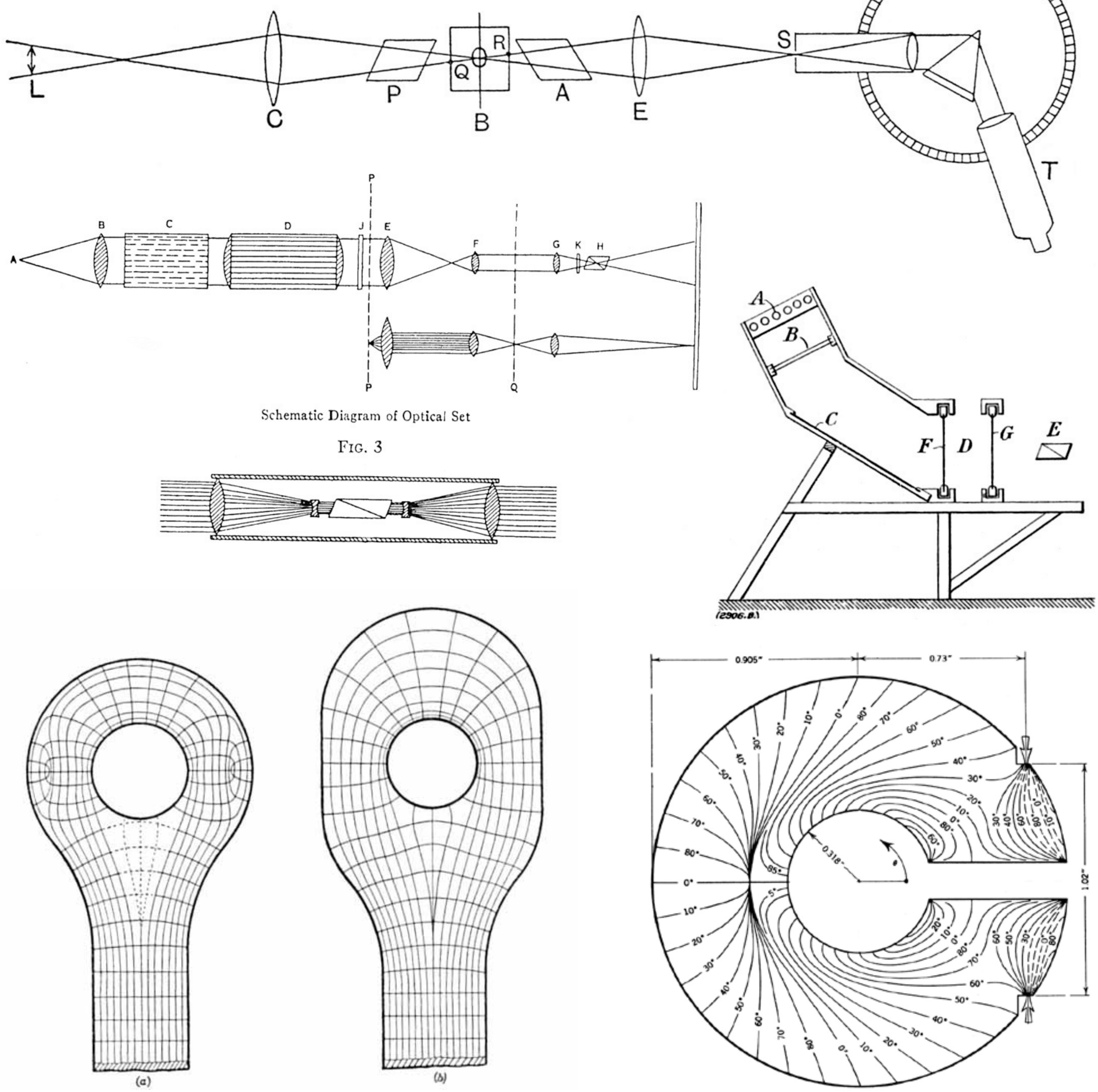

Figure 27-5. *Top:* A typical experimental situation from around 1905 (Coker and Filon 1931) for using monochromatic polarized light to study tensions within a small glass model B under stress. The light source is to the left, observations are made through the telescope T. *Center left:* In order to inspect photoelastically a large area of an object P, much light had to pass the polarizing prism which is inside a tube D, cf. inset below. In order to prevent overheating of the prism, the light beam was first filtered in the water bath C (Kimball 1921). *Right:* A glass mirror is preferred here to a Nicol prism for polarizing the light from the lamps A. A transparent piece for stress testing is then placed in the space D between the quarter-wave plates F and G (Coker and Thompson 1912). *Bottom:* The distribution of stress found from transparent models. On the left-hand side, there are results from two different eye bars for the anchoring of bridge cables. In the one on the right the stress is more even, reducing the danger of failure (Coker 1912). The *right*-hand diagram shows stresses (which are high where the contours are close together) in a circular washer with a slot, when squeezed together (Frocht 1941).

by various scientists in the 19th century (e.g. Airy 1833a, Neumann 1843, Czapski 1891c, Rayleigh 1901) and applied in the production of so-called tempered glass (Luynes 1876). Polarized light may be used in observing these stresses or others imparted during the production of objects from raw glass (Preston 1930). As pointed out already by Brewster (1816c, p. 113-114) the presence of stress will increase the brittleness of window panes, bottles, jars, light bulbs, laboratory glassware, thermometers, etc. This may be remedied by appropriate annealing, i.e. re-heating these objects to a temperature near the melting point, followed by slow cooling.

Internal stresses will also degrade the optical performance of glass in the lenses and prisms of microscopes, telescopes, cameras, projectors, and range finders, as well as in containers (like polarimeter tubes) for samples that are to be analyzed by means of light, etc. See descriptions by Hovestadt (1900), Schulz (1912; Fig. 27-4), Zschimmer and Schulz (1913), Cleary (1914) and Halle (1921). After having long imported almost all their optical glass, British and American users including the military suddenly had to depend on domestic supplies during World War I. This was not easy, because techniques in the field had evolved in continental Europe through centuries and were to some extent kept as trade secrets. Papers by Adams and Williamson (1919, 1920), Tool and Valasek (1920) and Wright (1921) indicate how optical glass of satisfactory quality could be made available in the U.S. after less than a year of intensive efforts at government and industrial laboratories. Polarizers in photoelastic strain viewers, petrographic microscopes and photometers were essential to these efforts and continued to be useful, cf. Skinner (1923, p. 749-750), and Tardy (1929).

The effect of mechanical stress on materials like glass is to impart a directional bias to its molecules which normally have random orientations. Each small region within these materials therefore acts upon light as a uniaxial crystal. In the year 1866 Maxwell (1873-74) was one of the first to study an analogous phenomenon in flowing or rotating liquids, called flow birefringence or the Maxwell effect. Here, shearing movements in the flow cause the liquid molecules, which are seldom spherical in shape, to align with each other to some extent. Bouasse (1925a, p. 411-418, cf. Gehrcke I, 2, 1927, p. 879-880) points out that in experiments on viscous fluids with polarized light, it is easy to observe the time lag of their movement relative to the forces causing that movement. In a notable paper on the nature of gases which Maxwell also published in 1866, he introduces new concepts like “relaxation time”, and mentions that the response of some materials to applied pressure or shear may show characteristics of both elastic and viscous deformation. It is possible that some of these general ideas may have originated in Maxwell’s experiments on liquids with polarized light. It may be mentioned as an example, that the deformation of ice crystals due to shear stress was later found to exhibit such behavior (McConnel and Kidd 1888). The Maxwell effect was investigated by Kundt (1881), his students and others, for instance Umlauf (1892), Hill (1899), Metz (1902), Zakrzewski and Kraft (1905) and Reiger (1910). It turned out to be quite a complex phenomenon in many situations (Coker and Filon 1931, p. 286-288). See section 36.8 on developments after 1920.

27.4 E. Fischer’s research on sugars and other compounds, and some related discoveries

The branch of organic chemistry concerned with the three-dimensional structure of molecules (in particular those forming mirror-image pairs), grew rapidly as more and more scientists agreed with the views first expressed by J.H. van’t Hoff and J.A. Le Bel in 1874. At least ten books on this topic which was in 1878 given the name “stereochemistry”, appeared before or just after 1900 (Fig. 27-6).

Emil Fischer was undoubtedly the most productive pioneer in this field. He created a chemical foundation for biochemistry by his research on sugar compounds, enzymes, proteins and purines; to the last group belong for instance adenine and guanine which are constituents of nucleic acids in cells. Only two aldohexose sugars were well known from nature when Fischer began his

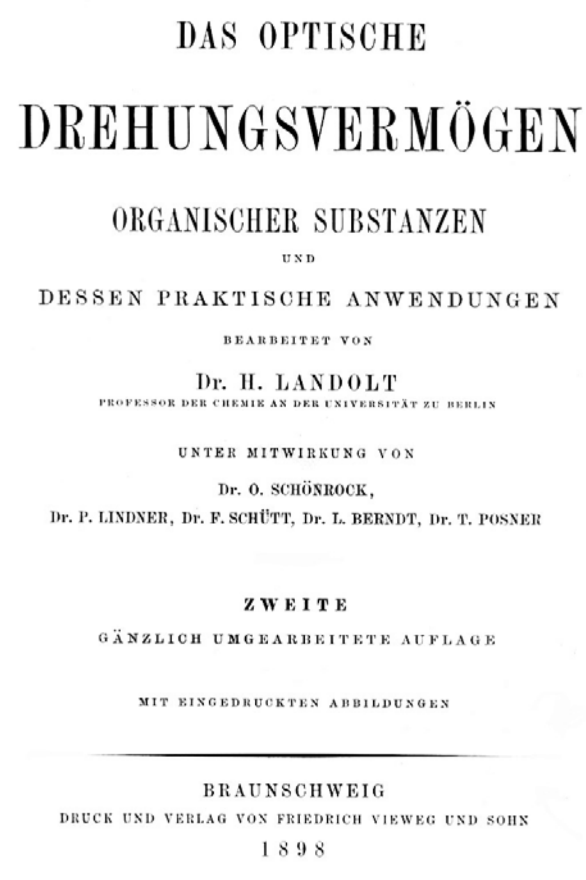

DAS OPTISCHE

DREHUNGSVERMÖGEN

ORGANISCHER SUBSTANZEN

UND

DESSEN PRAKTISCHE ANWENDUNGEN

BEARBEITET VON

Dr. H. LANDOLT

PROFESSOR DER CHEMIE AN DER UNIVERSITÄT ZU BERLIN

UNTER MITWIRKUNG VON

Dr. O. SCHÖNROCK,

Dr. P. LINDNER, Dr. F. SCHÜTT, Dr. L. BERNDT, Dr. T. POSNER

ZWEITE

GÄNZLICH UMGEARBEITETE AUFLAGE

MIT EINGEDRUCKTEN ABBILDUNGEN

BRAUNSCHWEIG

DRUCK UND VERLAG VON FRIEDRICH VIEWEG UND SOHN

1898

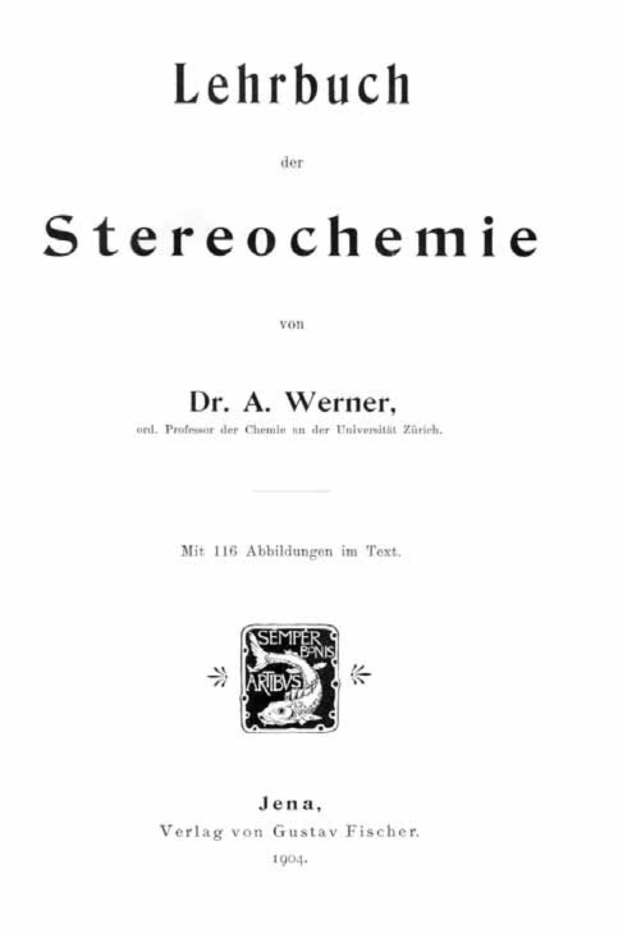

Lehrbuch

der

Stereochemie

von

Dr. A. Werner,

ord. Professor der Chemie an der Universität Zürich.

Mit 116 Abbildungen im Text.

Jena,

Verlag von Gustav Fischer.

1904.

Figure 27-6. Intensive research on optical activity of organic substances around 1900 is reflected in the book by Landolt (1898) which contains detailed data on some 700 pure compounds. Many books on stereochemistry in general were also published, e.g. by Werner (1904).

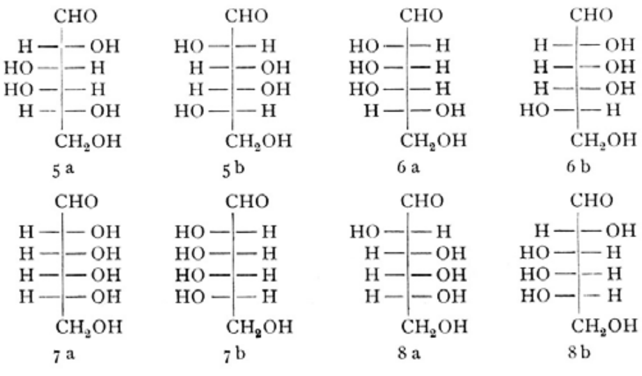

5 a 5 b 6 a 6 b

7 a 7 b 8 a 8 b

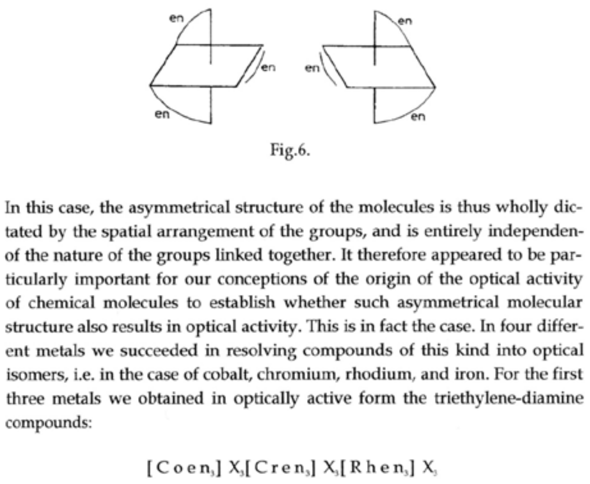

Fig.6.

In this case, the asymmetrical structure of the molecules is thus wholly dictated by the spatial arrangement of the groups, and is entirely independen- of the nature of the groups linked together. It therefore appeared to be particularly important for our conceptions of the origin of the optical activity of chemical molecules to establish whether such asymmetrical molecular structure also results in optical activity. This is in fact the case. In four different metals we succeeded in resolving compounds of this kind into optical isomers, i.e. in the case of cobalt, chromium, rhodium, and iron. For the first three metals we obtained in optically active form the triethylene-diamine compounds:

$[Coen_3]X_3 [Cren_3]X_3 [Rhen_3]X_3$

Figure 27-7. *Left:* Four out of the eight possible mirror-image pairs of aldohexose sugars: 5-galactose, 6-talose, 7-allose and 8-altrose. E. Fischer was awarded the 1902 Nobel prize in Chemistry for his fundamental research on the structure of carbohydrate molecules. *Right:* A paragraph from the speech by A. Werner on the occasion of receiving the 1913 prize (www.nobelprize.org), where he describes the importance of optical activity measurements in the confirmation of his theories about chemical bonds.

studies on sugars around 1887, namely glucose and galactose, cf. sections 12.4 and 13.2. Both rotated polarized light to the right. He realized that there must be eight different left/right pairs of aldohexoses. With an ingenious series of experiments which were partly based on prior findings by others, he managed to determine the structure of the above two sugars and to synthesize them as well as most of the other fourteen (Fig. 27-7). One technique developed by Fischer involved treating sugar solutions with phenylhydrazine to produce derivatives called osazones which were much easier to identify than the sugars themselves (cf. Pringsheim 1925, p. 57-59). See for instance Fischer (1890a,b,c,d,1894a) and Neuberg (1899). Polarimetric measurements were essential to the success of the phenylhydrazine method which continued in use for decades in research on sugars and related compounds.

As an example, one of Fischer‘s new sugars which he called mannose and separated into its two stereo-isomeric forms by means of micro-organisms, was later found in juices and seeds from various plants. He also synthesized the ketohexoses fructose and sorbose, some disaccharides, other types of sugars and many compounds derived from these. Fischer (1895) indicates that the first disaccharide which he synthesized was an isomer of maltose, in 1890. For many years, confusion reigned about the properties of this isomaltose, its possible appearance during decomposition of starch, and even about its existence (see Lippmann 1904, p. 1504-1520). However, by polarimetry and other methods it was established decades later how its two glucose units are joined together differently from the glucose bonds in maltose. Fischer studied the relations between the hexoses and pentoses (i.e. sugars with five C-atoms; four mirror-image aldopentose pairs of these are possible), and he prepared in 1891 new pentoses in addition to the two (l-xylose and l-arabinose) that had previously been obtained from natural sources. One of the new aldopentoses was called ribose (Fischer and Piloty 1891). A. Kossel then found in 1893 that the nucleic acids of yeast cells contained a carbohydrate which he considered to be a pentose sugar; it later turned out to be ribose. See more on that important matter towards the end of section 29.2; other people continued Fischer’s research on the various properties of the pentoses (e.g. Wohl 1893, 1899).

Research by other chemists along similar lines concerned among other things the effects of acids and bases on sugars. Thus it was known since the 1850s that heating invert sugar in a solution of calcium hydroxide generated a new carbohydrate called saccharin ($C_6H_{10}O_5$, not the artificial sweetener of that name). Polarimetry aided in identifying this compound (Péligot 1880, Scheibler 1880, Cuisinier 1882). Kiliani (1882) established that it was an anhydride of saccharinic acid, and he soon produced further optically active compounds of the same class (lactones) by various means. Bruyn and Ekenstein (1895) later showed that in an alkaline solution, glucose may be partly converted to fructose and mannose. This Bruyn-Ekenstein transformation has been of some importance in organic chemistry and in the industrial production of ketones. Different procedures for converting sugars into other sugars were also developed around the turn of the century by them as well as by Wohl (1893, 1899), Ruff (1898), Nef (1907), and Neuberg (1907), to name a few.

Glycosides are a class of chemicals consisting of a monosaccharide and some other group of atoms. Most of them are optically active (see Abderhalden 1911), which has often aided researchers. Of these chemicals, salicin and coniferin have already been mentioned; other glycosides from plants include phloridzin which can induce diabetes, the heart drug digitoxin (Kiliani 1891), amygdalin from almonds, and sinigrin from mustard seeds (Gadamer 1897) which may inhibit cancer. A large number of known (Mannich 1912, arbutin) and unknown (Tiemann 1885, glucovanillin) active glycosides were synthesized, beginning in fact before 1880. E. Fischer developed new methods for that purpose, one depending on catalysts to first produce esters of various sugars with acetic acid (Fischer and Armstrong 1901). He made several glycosides with his associates (Fischer and Raske 1909, Fischer and Bergmann 1917, etc.). Others also applied this acetylation approach in similar work (e.g. Koenigs and Knorr 1901), and Fischer realized its potential for synthesizing di- and oligosaccharides. The first disaccharide to be made thus was melibiose (Fischer and Armstrong 1902) and others followed (section 29.2); sucrose on the other hand defied numerous attempts of its chemical synthesis until 1953.

Willstätter (1914, 1915) investigated plant pigments called anthocyanins which belong to the class of glycosides, making use of their unusually high optical rotation values. Among processes involving glycosides that were studied with the aid of polarimeters, was their decomposition by acids. One example (Arnaud 1898) is ouabain, a potent arrow-poison known to African tribes and now the basis of heart drugs. Caldwell and Courtauld (1904) and Walker and Krieble (1909) similarly used acids to split amygdalin. Enzymes such as emulsin (Bourquelot 1907b, Bourquelot and Bridel 1913, and many others) were also able to remove the sugar component from glycosides. These sugars are frequently either glucose or rhamnose (isodulcite) which may be described as a methyl-pentose or deoxy-mannose. Early research on the properties of rhamnose and on various glycosides containing it by E. Fischer and by others (e.g., Will 1885, Rayman 1887) made use of its optical activity.

T. Purdie who had been a student of the above-mentioned J. Wislicenus, continued working on stereochemical problems after he had set up his own research group. During some measurements of optical rotations, Purdie and Pitkeathly (1899) discovered a way to add alkyl groups to hydroxy compounds like alcohols and sugars, by treatment with silver oxide and an alkyl iodide. Extensive studies were carried out by this group, later led by J.C. Irvine and others, on the molecular structure of sugars and other carbohydrates for the next 30 years. Among significant early works which depended heavily on the use of polarimeters, one may mention those by Purdie and Irvine (1903), Irvine and Rose (1906), and Purdie and Paul (1907). Purdie‘s colleague W.N. Haworth in 1915 found a new method of preparing methyl ethers, and with his collaborators (cf. section 29.2) made much use of such glycoside syntheses in efforts to elucidate the configuration of mono-, di- and polysaccharides, see section 29.2 and Appendix 5.

Fischer (1894b) drew an important and much-quoted conclusion from his research on the varying efficiency of enzymes from different yeast strains in the fermentation of sugar: "As an illustration, I would say that an enzyme and a glucoside must fit together like a lock and a key, in order to exert a chemical effect on each other.". A similar assertion was made by Fischer and Thierfelder (1894), stating "…that the fermentability is closely connected to the geometrical structure of molecules, and can thus be considered to be a stereochemical question.". As Fischer (1898-99) also noted, three-dimensional chemistry is a cornerstone of all biological activity. See Appendix 5 on Fischer. In addition to the importance of his sugar research to biochemistry, it was of enormous value to industrial sectors connected with sugars, starch, cellulose and chemicals of that kind (see Pringsheim 1923, 1925).

In the context of industry, an example may be given. It was found out by means of polarimetry and other methods (Flechsig 1883, Hönig and Schubert 1886, Schulze 1892) that cellulose consists of units of a disaccharide. More on the cellulose disaccharide in section 27.7, but it contains two glucoses like the disaccharide (maltose) building-blocks of starch. The bonds between them are however different: those in cellulose cannot be broken by the digestive enzymes of many animals, whereas for instance various bacteria, fungi and insects have the means to do so. From the early 1880s, attempts had been made to transform cellulose into the more valuable di- and monosaccharides by treatment with strong acids (e.g., Cross 1905, Ost and Wilkening 1910, Willstätter and Zechmeister 1913, Zemplén 1913, Cunningham 1918, Sherrard and Froehlke 1923). After much experimentation Irvine and Hirst (1922) obtained over 95% yield of glucose from pure cotton cellulose. Such transformations could be easily followed with a polarimeter, but the method did not turn out to be economically viable. A related field of academic research where various means of chemical treatment caused acetyl groups to be attached to the molecular building blocks of cellulose, had a slow start for a quarter-century from 1870. Later, polarimetric measurements aided understanding of the processes involved (Skraup and König 1901, Schliemann 1911, cf. Pringsheim 1923, p. 62-65). This research contributed to the commercial interest in cellulose acetates which is evident from very numerous patents granted from the mid-1890s onwards. These acetates were used in the 1910s for instance in the production of lacquers and electrical insulation. In particular, an acetate alternative to celluloid (Clément and Rivière 1913) was noted for eliminating the serious fire hazards posed by movie films. Artificial silk and other fibres from cellulose esters soon became major raw materials for the textile industries.

Two examples will be given here on the relevance of optical activity to knowledge on and utilization of oligo- and polysaccharides. Firstly, inulin is a polysaccharide which accumulates in roots and rhizomes of various plants, as a store of energy. Polarimetry played a part in research on its occurrence, properties and potential uses (Hönig and Jesser 1888, Tanret 1893, Irvine and Steele 1920, Willaman 1922, Jackson and Goergen 1929, Thaysen et al. 1929). Inulin which by hydrolysis was shown to be a polymer of fructose, has since become a valuable ingredient in many processed foods, and it also has medical applications. See Hudson (1918) and Jackson et al. (1926) on the industrial production of fructose from the inulin of dahlias and Jerusalem artichokes. Secondly, polymers of the monosaccharide galactose were found in a similar way to be a constituent of cell membranes in many plants (Müntz 1882, Schulze et al. 1890, Winterstein 1893) including seaweeds (Mayer and Tollens 1907), as well as in some fungi (Dox and Neidig 1914). It is also common for plants to accumulate reserves of these so-called galactans in their seeds (especially beans and peas), which are a significant constituent in human nutrition. The presence of galactans or other galactose derivatives in brain tissue was demonstrated by Thierfelder (1890), because a sugar obtained by hydrolysis of such tissue had similar optical activity (Meissl 1880, Bourquelot 1886) and other properties as galactose prepared from lactose. These compounds later turned out to serve various functions in mammalian cells.

Scientists had investigated the optical activity of natural proteins since the mid-19th century, and also the 20 or so amino acids of which they are composed (e.g. Schulze and Likiernik 1893). When obtained by the decomposition of proteins, amino acids are all optically active (cf. the example in Fig. 16-1, bottom right) except one, i.e. lycine. However, their synthesis generally produces racemic mixtures of d- and l- components. Fischer (e.g., 1899, Fischer and Mouneyrat 1900, Fischer and Warburg 1905) made new discoveries in this field, using alternatively Pasteur‘s (1853a) alkaloid method or new benzoyl- and formyl-methods to resolve such mixtures. He wrote in 1902-09 tens of papers on the synthesis of amino acids (Fischer and Leuchs 1902) and demonstrated relations between them, for instance how serine could be transformed into alanine and cystine (Fischer and Raske 1907) by chemical treatment. Fischer and his collaborators went on to synthesize many dipeptides and their derivatives, as well as polypeptides (Fischer 1905, Fischer and Zemplén 1909), sometimes aided by polarimetry.

Some amino acids (designated by d- or +) rotate light to the right, and others to the left (l- or -); however, it is also possible to define the handedness of the molecules themselves, a property designated as D or L. All amino acids in natural proteins turned out to be of the L-type, as was first suggested by Clough (1918) on the basis of a detailed study of optical rotations in these acids and numerous related compounds. This is of fundamental importance in biological chemistry: for one thing, natural protein-splitting enzymes only act on the L-acids (see Levene 1925). The action of enzymes on other asymmetric compounds such as esters (Warburg 1906) was also studied.

P. Walden (1896; see D.S.B. and Fig. 27-8) discovered an unexpected class of chemical reactions, by means of which it was possible to convert in a simple way a left-handed molecule into the same right-handed molecule, or vice versa. For several years after Walden‘s initial series of papers on this phenomenon in 1896-99, it was regarded as a mere curiosity. Then Fischer (1906,

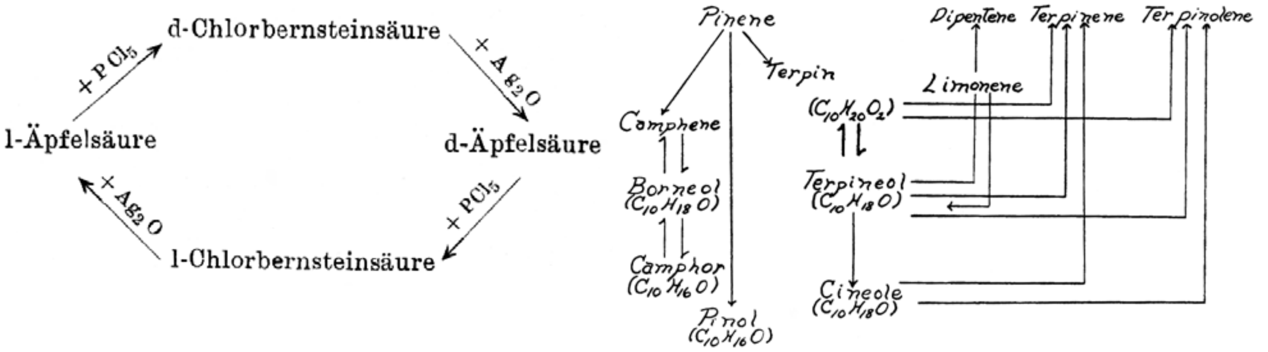

Figure 27-8. *Left:* One example (Walden 1919) of the Walden inversion between left-handed and right-handed versions of the same molecule. *Right:* A scheme indicating relations between various compounds of the terpene and camphor groups. This scheme, first published by O. Wallach in 1891, is here reproduced from a paper in J. Chemical Education 24, 1947. Several of the compounds are optically active.

1907) began employing the „Walden inversion” with success in his studies on amino acids to 1912, and others soon followed. Thus, A. McKenzie and his collaborators (McKenzie and Clough 1908, etc.) greatly enhanced the practical scope of Walden‘s discovery in over a dozen papers. They related it to other intramolecular changes already known to take place in the wide range of organic nitrogen compounds. As a result, polarimetry was increasingly applied to research on these changes, which include the so-called Lossen rearrangement, Curtius rearrangement and reaction, Beckmann rearrangements, Hofmann reaction, pinacolin transformation, and so on. The inversion has therefore continued to be a valuable tool in various fields of stereochemical research (Karrer and Kaase 1919, Walden 1919, Kenyon and Young 1941, Ramsay 1981). It also stimulated theoretical chemistry in general: already by 1930 at least 25 different theories of its mechanism had been proposed and tested (e.g. Gadamer 1913).

Glucosamine is a compound derived from the glucose molecule by replacing one H-atom with an NH$_2$-group. It was first described (Ledderhose 1876) as a product of hydrolysis of chitin from lobster claws. Acetylated glucosamine is in fact a building block of chitin in the same way as cellulose is composed of glucose units. The optical activity of glucosamine and of related compounds (Bruyn 1895) was valuable in extensive research on its occurrence, chemical properties (Fränkel and Kelly 1902) and biological functions in the following decades. It is a constituent of skeletons in most arthropods, as well as of tissues in various fungi (Winterstein 1894b) and lichens, and of mucous substances (Müller 1901). Fischer and Leuchs (1903) were the first to synthesize glucosamine. Derivatives of it are important in the metabolism of man and other vertebrates. Chondrosamine, a substance where a H-atom in galactose is replaced by NH$_2$, may be obtained from cartilage by hydrolysis. It was first distinguished from glucosamine by Levene and LaForge (1914) on the basis of its optical rotation and other properties, from which Levene also deduced their structure. His synthesis of chondrosamine (Levene 1917) was solidly supported by observations of optical activity. Levene‘s (1922) book on hexosamines and compounds derived from them describes many detailed measurements of specific rotations.

In the early decades of the 20th century, many scientists followed Fischer‘s example in applying polarimetry in research on amino acids and proteins. This research concerned their sources in nature, their molecular structure and relationships, compounds derived from them, their breakdown products, methods of synthesis, and so on (cf. Edlbacher 1927, Sayhun 1944). Only a few randomly selected examples will be related here. Ehrlich (1904) studied the properties of leucin and isoleucin (which he isolated from molasses) in detail. Locquin (1907) subsequently showed that an amino acid synthesized by himself and L. Bouveault possessed the same optical activity and other properties as Ehrlich’s isoleucin. Abderhalden and Weil (1913) isolated a new amino acid called norleucin from hydrolysis products of nerve tissue. Leuchs and Brewster (1913) synthetized oxyproline whose molecule has two asymmetric carbon atoms. Dakin (1918) discovered and synthesized hydroxyglutamic acid.

Results on the characteristics of amino acids and proteins must have aided in the acquisition of further knowledge regarding the role of these compounds in biochemical processes, as well as in applications to pharmaceutics, agriculture, food science and other practical fields. Levene and van Slyke (1909) concluded from their optical measurements of casein and other substances: "An exact analysis of the important leucin fraction of protein is thus rendered possible for the first time.". Similar work on other milk proteins is reported by Dudley and Woodman (1915). Osborne and Harris (1903, see also Lindet and Ammann 1907) measured carefully the optical activity of at least a dozen proteins such as gliadin and globulin from various plants. This property may have been used subsequently in research on cereals: in a paper on the optical activity of gliadin proteins in wheat Dill and Alsberg (1925) claim that "The properties of flour depend largely upon the proteins it contains". Dakin (1920) was the first to estimate the relative proportions of over a dozen amino acids in gelatin, using a new separation method and "Innumerable analyses...by polarimetric observations". In a discussion of E. Fischer's research on the common amino acid cystine, Toennies and Lavine (1930) state that "The only practical quantitative criterion for the purity of l-cystine is its optical rotation.". Freudenberg and Rhino (1924) demonstrated, using a polarimeter among other techniques, that the configuration of alanine (Fig. 16-1) is identical to that of lactic acid, with an NH_2-group replacing OH. Similarly, aspartic acid was found to be analogous to malic acid (see Freudenberg and Lux 1928, Fig. 35-1; Wittig 1930, p. 66). P. Karrer and his co-workers (e.g., Karrer et al. 1926) also made significant discoveries regarding the configuration of several amino acids and their interrelationships, aided by polarimetry.

In sections 16.2 and 22.2, three methods suggested by L. Pasteur for the separation of right-handed and left-handed molecules in racemic mixtures were described. A fourth method (Marckwald and McKenzie 1899) depended on the difference in reaction rates between a right-handed acid and right- or left-handed bases. Bertrand (1898) used certain bacteria to generate optically active ketones from inactive alcohols. After 1900 it was shown by Neuberg (1903), Erlenmeyer and Arnold (1904) and others how dibasic acids could be utilized in the resolution of mixtures of left- and right-handed alcohols. Dakin (1903) similarly found that the d- and l- components of optically inactive esters of mandelic acid were hydrolysed at different rates by an enzyme. Ingersoll (1925) made use of different solubilities of right-right and right-left salts for the complete separation of inactive acids and bases. Some of these resolution methods were inefficient and mostly of theoretical interest until the 1960s.

Marckwald (1904) was the first to synthesize an optically active compound from inactive components, with the aid of an active intermediary material. A. McKenzie (e.g. McKenzie and Wren 1907) also wrote several papers on the subject. Rosenthaler (1908) succeeded in utilizing an enzyme (oxynitrilase, from almonds) as a catalyst in asymmetric synthesis, and Bredig and Fiske (1912) found optically active alkaloids suitable for the same purpose. Improved versions (often involving enzymes, or catalysts based on metal complexes) have been developed since 1980 in order to produce pure enantiomers in the chemical and pharmaceutical industries. Nobel prizes were awarded in this field of chemistry in 1975 and in 2001.

E. Fischer investigated the cleaving of polypeptides and proteins into smaller peptide units by hydrolysis or by digestive fluids, using polarimetry and other methods to identify the products of these reactions (Fischer and Abderhalden 1905). In this work which was continued by the latter author (Abderhalden and Koelker 1907, Abderhalden and Chang 1912), important results were obtained on the specificity of enzymes. Other early 20th century polarimetric studies of enzymes in various situations include that by Daish (1910) on the presence of maltase and of maltose sugars in foliage leaves, by Koelker (1910) who tested the proteolytic effects of yeast juice, and by Evans (1912) on amylase in saliva.

As mentioned in section 16.2, Pasteur (1853a) was the first to observe "racemization", i.e. a sample of a pure d- or l- substance in the liquid phase turning into an inactive mixture of d- and l-molecules. Studies on such processes were resumed from around 1876; a number of examples are cited by Werner (1904, p. 46-48) including those by Le Bel (1878, amyl alcohol), Lewkowitsch (1883, mandelic acid), and Wallach (1885, phellandren). The speed of racemization can increase greatly on heating, or on changing the pH of the aqueous solvent. Furthermore, racemization may occur partly or wholly during chemical manipulations such as synthesis. Kinetic and thermodynamic aspects of this type of processes were investigated to obtain insight into the structure and stability of the molecules involved (see Wittig 1930, p. 21-34). Walden (1898) demonstrated that a very slow „auto-racemization" occurs in some optically active substances upon storage. The relation between racemization and the Walden inversion mentioned above was also studied. These reactions commonly occur in amino acids and related compounds (e.g. Schulze and Bosshard 1886, Fischer and Jacobs 1906, 1907, Ehrlich 1906, Kossel and Weiss 1909, Dakin 1912). It may be added that after 1970, amino-acid racemization has become the basis of a method to estimate the age of organic remains in geological strata. The racemization phenomenon is also relevant to the study of alkaloids. For instance, polarimetric observations on the two plant alkaloids atropine and d-hyoscyamine, revealed that the former (well known to ophthalmologists) was a racemic mixture of d- and l-hyoscyamine (Will and Bredig 1888, Gadamer 1901).

In addition to the above major discoveries, E. Fischer carried out an extensive series of studies on tannin compounds. They are polyphenols, consisting of one or more benzene rings with OH-groups. These compounds which occur abundantly in vegetation e.g. in leaves, unripe berries, and bark, have a multitude of industrial and medical uses. Fischer and Freudenberg (1912) showed with the aid of polarimetry that some previous suggestions about their structure were incorrect, while confirming the conclusion by Pottevin (1901) and others that hydrolysable tannins contain a glucose unit. In Fischer‘s papers (Fischer and Bergmann 1919), the optical activities of all new substances are recorded for reference and sometimes used e.g. in tests of the repeatability of procedures.

27.5 A. Werner‘s theory of coordination bonds; optically active compounds with asymmetric atoms other than carbon

For several decades, carbon was the only element known to form mirror-image molecules. However, it appeared possible that other elements having a valency of 3 or higher could also do so and thus cause optical activity. The young chemist A. Werner was among those looking for such molecules, nitrogen being a likely candidate for an asymmetric center atom. Hantzsch and Werner (1890) attempted to explain certain properties of so-called azo- and oxime-compounds from the viewpoint of a nitrogen atom being at the center of a mirror-image molecular group. Although based on indirect evidence, this paper was a landmark achievement regarding the three-dimensional chemistry of nitrogen. Le Bel (1891, 1904) claimed to have synthesized a mirror-image compound around tetravalent nitrogen. This seems not to have been the case, so the first one that was synthesized and definitely proved to contain a nitrogen atom with mirror-image symmetry, was an organic ammonium compound (Pope and Peachey 1899, Marckwald 1899). More ammonium compounds having this property were soon made (Wedekind 1905, Jones 1905), followed by other classes of complex nitrogen-containing chemicals, e.g. by Meisenheimer (1908; Wittig 1930, p. 163-176). Numerous attempts were made to construct optical isomers based on trivalent nitrogen, both in compounds with and without a double bond. See for instance by Mills and Bain (1910), Stewart (1919, p. 94), Meisenheimer et al. (1924) and Wittig (1930, p. 176-211). The success rate in these attempts seems to have been rather low, according to subsequent accounts.

In Werner‘s (1891) habilitation thesis he expresses particular concern about the fact that current theories of atomic and molecular structure only explain limited aspects of the phenomenon of optical activity. Werner (1893) advanced a hypothesis on what he called “coordination” chemical bonds, and he synthesized a large number of compounds around atoms e.g. of cobalt, chromium and platinum (Werner 1906). Some of these molecules could exist in either symmetrical or mirror-image configurations. Polarimetric measurements were therefore an indispensable tool in Werner’s research from 1897 (see e.g., Douglas 1994, and Fig. 27-7), as in the case of E. Fischer in the preceding section. He wrote a well-known book on stereochemistry (Werner 1904, Fig. 27-6) and made great strides in research on this topic in the first two decades of the 20th century. To begin with, not all scientists took his ideas seriously (see Stewart 1919, chapter XV) but Lowry (1935, p. 72) claims that they “received immediate and almost universal recognition, as the result of the preparation of an optically active salt, the dissymmetry of which could not have been foreseen apart from the hypothesis of coordination”. This was a complex cobalt compound (Werner 1911).

Werner wrote many additional papers on active substances based on cobalt, chromium, rhodium, platinum, iridium etc. in the next several years. They all contained carbon, which some people suspected might exert some influence on the molecules in this respect. However, Werner succeeded eventually to synthesize chemicals which were optically active while containing no carbon. In his first paper on these, Werner (1914) states that “…the investigation encountered many difficulties, and the only feature lightening our task was the enormously large optical activity [of the material]”. Some of his most important papers have been published by Kauffman (1968) in English translation; in the preface of that book, Kauffman recalls that the 1914 paper “…silenced even Werner’s most sceptical opponents…The last brick in the crumbling wall of separation between inorganic and organic chemistry had been razed.”. See also Kauffman (1975).

Werner’s work completely changed people’s views of chemical bonding. “The implications of his research have been of inestimable value in biochemistry, and in analytical organic and physical chemistry, as well as in mineralogy and crystallography” (Dictionary of Scientific Biography 1980-90, abbreviated here). See Appendix 5. Examples of coordination compounds include the heme group in the blood of vertebrates and hemocyanin in invertebrates, vitamin B_{12}, chlorophyll, metal silicates in rocks, various pharmaceutical products, dyes, and catalysts. An important class called chelation compounds is used widely in chemical industries, agriculture, food production, water purification, medicine, etc. Various aspects of Werner’s theories were debated into the 1930s, and these debates were often resolved by observations of optical activity in relevant compounds (see Ramsay 1981, and the entry on W.H. Mills in D.S.B.).

W.J. Pope, his collaborators and others (see Scholtz 1907) went on to synthesize before 1912 many optically active chemicals around atoms of for instance tin, selenium (Pope and Neville 1902), sulfur (Smiles 1900), phosphorus (Meisenheimer and Lichtenstadt 1911) and silicon. Lowry (1935, p. 54) considers that new methods introduced by these researchers “were immediately fruitful in disclosing a new type of molecular dissymmetry, the first really new experimental development since the work of Pasteur half a century before”. As regards silicon, C. Friedel and others had shown around 1865 that it is in many respects analogous to carbon, being tetravalent and able to replace carbon in some molecules. Ways of making various organosilicon compounds were discovered up to the turn of the century, but the reactions involved were complex and not well understood. Few people studied the chemistry of these compounds after 1900, the main figure being F.S. Kipping who had gained experience in synthesizing asymmetric molecules around nitrogen (Kipping 1900). This research was quite difficult, and it took eight years of careful work before Kipping (1907) could establish the first instance of silicon-based optical activity. With perseverance, his group published over fifty papers on organic derivatives of silicon up to 1944 (Challenger and Kipping 1910, Kipping 1921, etc.), with clear exposition of the experimental techniques needed.

Around 1920 other chemists including H. Staudinger (and later W.H. Carothers) began extensive investigations on the properties of macromolecular polymers such as rubber, with some help from polarized-light techniques (Piganiol 1947). Combination of results from that field and from the organosilicon research was pioneered at the Corning Glass Works. It led among other things to the synthesis of a broad class of materials called silicones. Their microscopic structure often consists of chains or rings of alternating Si and O, with methyl radicals or other organic groups attached. In a review, Kipping (1937) envisaged no immediate major advances in this section of chemistry, and neither did he (Dictionary of Scientific Biography 1980-90) expect practical uses to be found for his silicon-containing compounds. However, applications emerged by the early 1940s in for instance lubricants and insulation, primarily for military equipment. After World War II the range of known silicones widened greatly, and they spread into the civilian sector. McGregor‘s (1954) book outlines how silicones soon became an essential component in thousands of important industrial processes and products.

27.6 Reaction kinetics and equilibria, especially in hydrolysis and fermentation

After the emergence of the above-mentioned “Law of mass action” on chemical equilibria, many chemists studied the rate of chemical reactions as a function of time, when the temperature or other conditions were varied. The results of such observations may reveal whether for instance a reaction is taking place in one step or in a succession of steps each at its characteristic pace. Several methods of monitoring the progress of a reaction were tested, for instance by following the color changes of the reacting mixture, but polarimetric measurements were also very suitable where some of the components were optically active. Thus, Ostwald (1884) used a Laurent polarimeter to repeat and extend Wilhelmy’s (1850) observations on sugar hydrolysis (i.e. inversion) by acid (section 18.1). This was part of an important series of experiments by Ostwald in this field, which demonstrated that the catalytic effect of acids on reactions depends on the number of ions in the solution. See Appendix 5. Researchers carrying out similar experimental work included Fleury (1876), Urech (1880 and later) and Spohr (1886). A theoretical paper by Arrhenius (1889) uses data from the above experiments and others in a discussion of the effects of temperature on reaction rates. The Dictionary of Scientific Biography (1980-90) states that it led him to the concept of activated molecules which „is of great significance in modern chemistry.”. Among studies confirming Ostwald‘s and Arrhenius‘ ideas regarding the nature of reactions with the aid of polarimeters, were those by Will and Bredig (1888) on alkaloids which was mentioned in section 22.2, by Röntgen (1892) on pressure effects, Sigmond‘s (1898) observations on the hydrolysis of maltose, and work on the hydrolysis of sucrose by acids (Armstrong et al. 1908, Worley 1912, Jackson and Gillis 1920).

Gubbe (1885), Hönig and Jesser (1888) and Ost (1891) confirmed Dubrunfaut’s (1849) result from section 13.2 above, that the products of sucrose inversion consisted of glucose and fructose only, in equal amounts. They and several others made extensive studies on the inversion process, the best known being Herzfeld‘s (1890) improvements on Clerget‘s (1849) method of assaying sucrose in the presence of other compounds. The splitting of sucrose by the yeast enzyme invertase was also investigated in detail; O’Sullivan and Tompson (1890) wrote a major and widely noted paper on the subject. Methods in research of this type were revised (e.g. by Henri 1901,

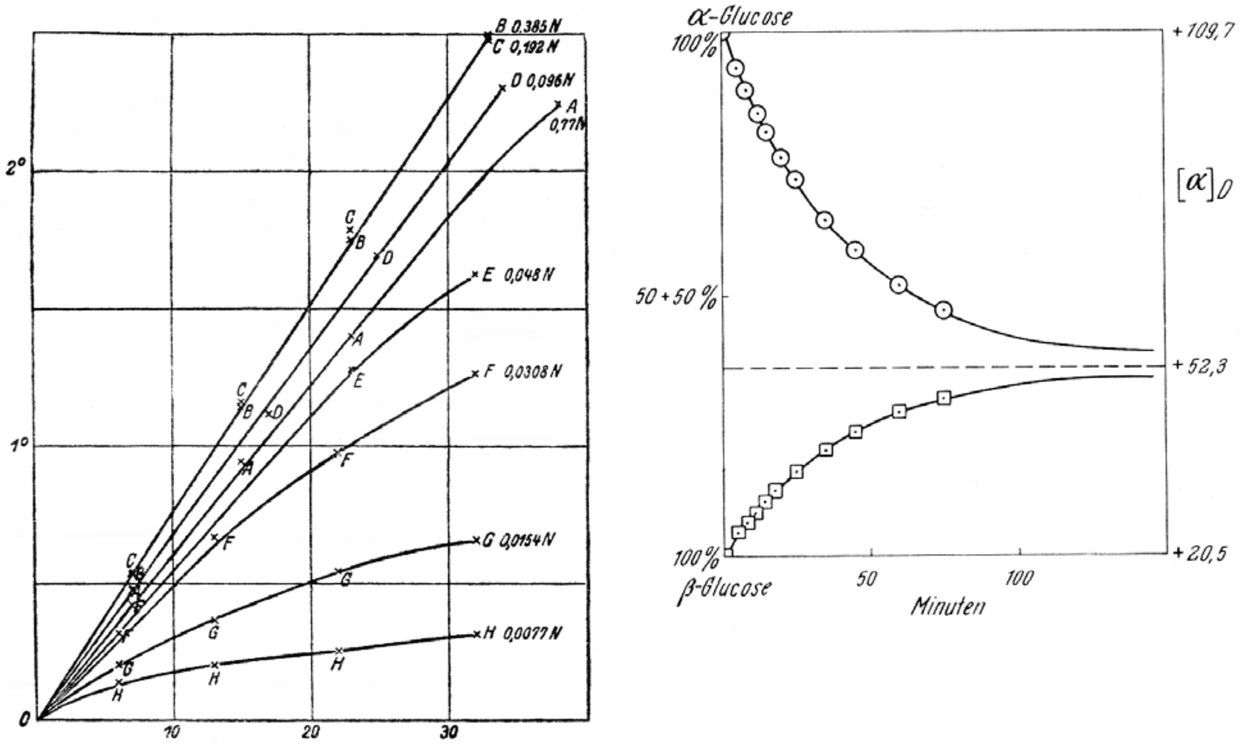

Figure 27-9. *Left:* A plot of important results obtained by Michaelis and Menten (1913) on the rate of inversion of sugar by enzymes. The different curves relate to different concentrations of sugar in aqueous solution. The x-axis shows time in minutes while the y-axis shows the decrease in optical rotations relative to initial values, in degrees. The diagram is taken from Kuhn (1924). *Right:* A graph of mutarotation, in this case the changing optical activity of glucose solutions with time after their preparation. The upper curve applies to α-glucose, i.e. the type originally known, the lower one applies to β-glucose which C. Tanret was the first to prepare in pure form in 1895. The diagram (Houben-Weyl 1955) is based on numerical data published in 1908.

Brown 1902, Armstrong 1904, Hudson 1908) after E. Buchner demonstrated in 1897-98 that the yeast cells themselves did not have to be present for the inversion to take place. See the comprehensive review paper by Caldwell (1906) on inversion experiments (where the dominant role of polarimetry is acknowledged) and theories related to inversion.

Until around 1900 the only known function of enzymes was the transformation of larger molecules to smaller ones, accompanied by uptake of water (hydrolysis). Many attempted to reverse such transformations, and an example was finally found by Hill (1898, 1903) with the aid of a polarimeter. This discovery was confirmed in further work by various methods including polarimetry (e.g., Bayliss 1912). It stimulated research on functions of the enormous number of enzymes found in nature, such as their synthesizing potential (Bourquelot et al. 1913a, Hérissey 1921). A product appearing in enzymatic synthesis could be identified by comparing its specific rotation and other properties with those of known compounds available from other sources. The reversibility of enzyme action was later said to have “entirely changed the conceptions of the physiology of metabolism” (cf. Kohler 1973).

Michaelis and Abderhalden (1907) compared the latter‘s experimental results (section 27.4) on the kinetics of dipeptide splitting by enzymes, with theoretical considerations by Henri (1903). Hudson and Paine (1909) showed that hydrolysis of the glycoside salicin by the enzyme emulsin followed a simple kinetic equation, when mutarotation (see next section) of the resulting glucose was taken into account. Michaelis and Menten (1913) subsequently published an important comprehensive paper on the fermentation of sugar, also using measurements of optical activity (Fig. 27-9). They made several improvements upon the experimental procedures of previous investigators, and proposed a general model describing the rate of this catalyzed reaction, in the form of a differential equation. In his book, Fundamentals of Enzyme Kinetics (1995 edition), A. Cornish-Bowden states that Michaelis and Menten may be "…regarded as the founders of modern enzymology" due to this single contribution. However, according to the D.S.B. entry on Michaelis it did not gain much recognition until around 1930. More sophisticated theoretical models on catalyzed reactions appeared later, and precise measurements were often needed in order to find out which of them was most applicable: "… due to the rapidity and great precision of the polarimetric method, it is superior to any other in following the hydrolysis of sucrose" says for instance R. Kuhn (1924, p. 252) in his treatise on fermentation processes.

As people acquired more and more experience in the production, purification, and storage of enzymes, as well as in the control of their activity, they became very important in chemical and biochemical industries. As far as sugar was concerned, the invertase enzyme mentioned above was by 1910 beginning to replace hydrochloric acid in Clerget's (1849) method of estimating its concentration in solutions containing also other active compounds (Hudson 1910a, Browne 1912). In the production of beet sugar, it was for instance sometimes necessary to find out how much of the optically active trisaccharide raffinose was present in samples of sucrose solutions. It was shown that more accurate results could be obtained by the use of enzymes (Hudson and Harding 1915; Paine and Balch 1925, 1927) than by acid hydrolysis. However, enzyme methods were mostly confined to research projects, as they proved too costly and cumbersome for routine industrial use (Browne 1912, p. 275; Bates et al. 1942, p. 152).

27.7 The mutarotation phenomenon

Dubrunfaut (1846) noticed that a change took place with time in the optical activity of glucose solutions, without any apparent cause. Measurements showed that in aqueous solutions that were freshly prepared (or produced by inversion) the specific rotatory power of the glucose was about +110°, but it decreased over a period of hours to +52° (Fig. 27-9). Pasteur (1856) and others found that similar changes occurred in some other sugars (e.g., Schmoeger 1880 in lactose, Meissl 1882 in maltose, Parcus and Tollens 1890, Tanret 1896). It was also observed in related compounds, all of which contained an aldehyde group. A suggestion that a hydrate was being formed in these reactions was soon discounted. Instead, people realized that previous assumptions of a linear structure of sugar molecules were no longer tenable: they could in solution have two (or three) differently bent shapes, with slightly different potential energies (e.g., Brown and Pickering 1897, Simon 1901). The molecules were constantly changing from one shape to another in collisions: at the start of the dissolution process all the molecules were alike, but a dynamic equilibrium was finally established when equal numbers were transformed from one configuration to another and v.v. per second. This was a so-called first order reaction, with the rate of change in optical activity being proportional to the difference between the momentary situation and the final situation.

Much research was carried out for decades on the kinetic properties of these processes and the effects of temperature and acidity upon them; this work was also connected to other studies on the structure of the respective molecules and on their interactions with the solvents. Polarimeters were particularly suitable for following such slow reactions, as their measurements were accurate and non-interfering. As regards glucose, Tanret (1895) discovered a new crystalline modification which had a specific rotatory power of +22.5° just after dissolution, increasing gradually to +52° (Fig. 27-9). The temporal changes in optical activity were originally given names like multirotation or birotation, but the common term mutarotation, proposed by Lowry (1899) in an important paper on nitrocamphor, was eventually adopted. Armstrong (1903) proved by observations especially on methyl-glucosides, that almost all the glucose in aqueous solution is present in two very similar ring shapes where an oxygen atom connects the carbon of the former aldehyde end to the fifth carbon atom counted from that end. At equilibrium, 64% of these closed-chain (glucopyranose) molecules are in the so-called β-form discovered by Tanret, while 36% are in the well-known other (α-) form. See more details in Lowry (1935, Chapter XXII) and other textbooks. The mutarotation of lactose was also studied in detail (e.g., Trey 1903), with later practical applications. However, it took at least another quarter-century to satisfactorily establish the constitution of the disaccharides, see section 29.2.

Hudson (1910b) writes of the work by Dubrunfaut and Tanret in a short review paper, that the world's chemists owe much to French science "…because more fruitful single discoveries in the chemistry of the carbohydrates have hardly been made". He concludes that "…it is even now apparent that the unfolding chemistry of the polysaccharides is to be largely a development of the mutarotation reaction.". This is so e.g. because it was found that starch is composed of glucose units in the α-configuration whereas cellulose consists of glucose units in the β-configuration. Two of the former can join to make maltose, while two of the latter make another disaccharide. Skraup and König (1901) who were among the first to study its properties by polarimetry and other means, gave it the name cellobiose. As indicated in section 27.4, cellulose is basically a polymer of cellobiose units. Until the 1940s at least, some people believed that in dissolved glucose, a small proportion might be present in a third configuration called γ-glucose (Irvine et al. 1915). This form of glucose was supposed to be very reactive and thus important in metabolism, but its existence turned out to be difficult to prove.

The maltose and cellobiose mentioned above are thus isomers of the type called linkage isomers or anomers, i.e. they have the same chemical composition but their two glucose units have different shapes and are joined in different ways. Scientists gradually sorted out the constitution of many di- and polysaccharides around 1900. Other linkage isomers of maltose and cellobiose include trehalose (e.g. Winterstein 1894a) which is common in some insects and in fungi, and gentiobiose which along with fructose makes the trisaccharide gentianose found in some plants (Bourquelot and Hérissey 1902). Similarly, sucrose has five linkage-isomeric compounds, for instance turanose which is a constituent of the trisaccharide melezitose (see Tanret 1906). The presence or absence of mutarotation was a valuable diagnostic tool in this research, as well as in the synthesis of sugars and glycosides (Irvine 1909). Other properties which were useful in studying the constitution of the various sugars, included their ability (if they contained a free aldehyde group) to reduce certain metallic compounds. The links between the monosaccharide units could be severed to a variable degree by acid hydrolysis or by the action of enzymes (invertase, etc.); polarimeters were often useful in identifying the products of such experiments.

Among chemists studying mutarotation in great detail around 1920 were Hudson (1917), Nelson and Beegle (1919), Euler et al. (1925), and Worley and Andrews (1927, 1928). Kuhn and Jacob (1924) and Kuhn (1925) investigated this process in connection with the action of β-amylase on starch. From the results of the latter paper, which is considered a classic piece of research, it could be concluded how the enzyme severs certain chemical bonds in the starch. See Appendix 5.

Bruhat (1930, p. 207) states that the mutarotation phenomenon "…has permitted us to discover a number of slow reactions which would not have been noticed otherwise, and to determine their rates and constants of equilibrium: it has played a fundamental role in establishing experimentally the laws of the chemical mechanics of solutions.". Here one may also refer to L. Onsager's speech on receiving the 1968 Nobel Prize in chemistry for discovering new laws of thermodynamics in irreversible processes. He mentions that his research in that field had in part been prompted by the precise measurements of C.N. Riiber and collaborators in the 1920s (e.g. Riiber and Minsaas 1926) on the mutarotation and concurrent changes in other properties of sugar solutions.

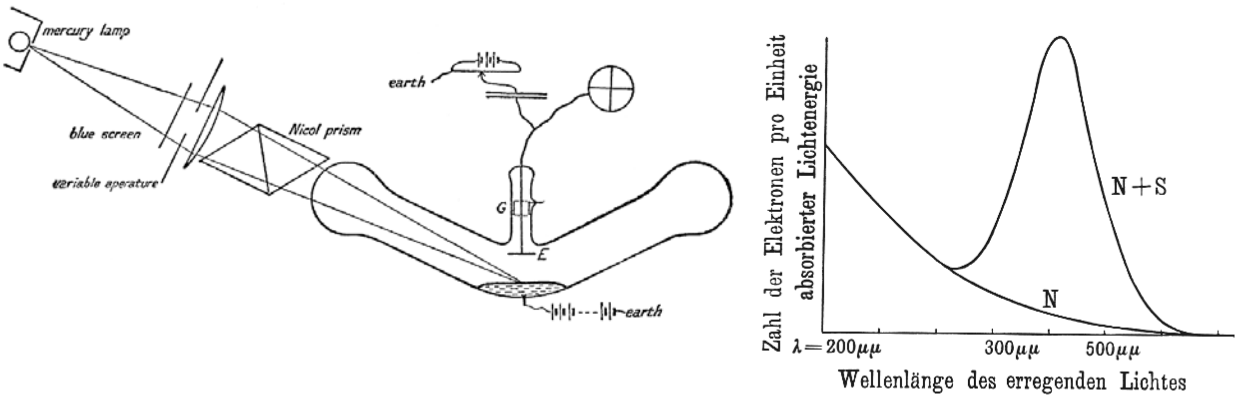

Figure 27-10. *Left:* A typical experiment (Hughes 1916) to examine how the magnitude of the photoelectric effect depends on the polarization of the incident light. A liquid metal (for instance, a mixture of potassium and sodium) is in the V-shaped glass bulb, and the electrical current between the metal surface and the electrode E is being measured. *Right:* Results from a similar experiment, for different wavelengths of the light (Pohl and Pringsheim 1914). The curve N shows the current when the electrical vector of the light is parallel to the metal surface, but an additional current S is generated when the light also has a component which is perpendicular to that surface.

27.8 The photoelectric effect and related phenomena

Light affects the electrical properties of some metals and semiconductors, such as the resistivity of selenium (first described in 1873) and various metal sulfides. H. Hertz discovered in 1887 in connection with his research on electromagnetic waves (section 28.4) that if you illuminate a metal surface with ultraviolet light, the air in its vicinity conducts electricity better than before. This turned out to be due to the fact that the incident light ejected electrons from the metal. This "photoelectric effect", especially in the alkali metals, was widely known by 1890. Polarized light was to some extent involved in the early experiments on photoelectricity (Elster and Geitel 1894, 1895) as well as in further research on the nature of photo-sensitive materials (e.g. Drude 1898, Edmunds 1904, Kunz 1909, Elster and Geitel 1909, Duncan and Duncan 1912, Brown 1914, Frehafer 1920). This research demonstrated among other things a direct relationship between the amount of light absorbed and the photoelectric current (i.e. the number of electrons which the light removes from the metal).

As will be discussed in section 36.5, the photoelectric effect was one of the phenomena which Einstein´s theory of light particles could explain; however, these particles retained some of the properties of transverse waves. Thus, Elster and Geitel (1894) found that the photoelectric current could be much greater when the electrical field vector in the light (see section 28.4) was perpendicular to the surface than when parallel to it (Fig. 27-10). In the former case (called the selective photoelectric effect) one can imagine the field pulling the electrons out of the surface. This aspect and its relation to the presence of gases around the metal surfaces, was tested in more detail by Elster and Geitel and by others (e.g. Hughes 1916) with the aid of Nicol prisms, cf. Fig. 27-10. Ramsauer (1921) used Iceland spar prisms in an experiment to resolve questions on certain quantum-mechanical aspects of photoelectron emission.

Additionally, Nicol prisms were often employed in varying the light intensity when photoelectric elements were being tested and adjusted (Elster and Geitel 1912, 1913, Schulz 1913, Pohl and Pringsheim 1914 and references therein, Nathanson 1916, Kunz 1917, Ives 1924). As knowledge of these complicated electrical effects of light accumulated, such elements began to be used for astronomical measurements around 1913, but they still needed calibrating by means of Nicol prisms

(Rosenberg 1921b). Photoelectric sensors soon found further practical applications, for instance in photography and printing.

27.9 On the role of polarimeters in quality control and standardization

In France, the development of polarimeters in the mid-19th century was supported by the government and by industrial associations, in order to improve the quality of organic raw materials and reduce adulteration of food and medicines (Billet 1858-59, II, p. 291-297). Such practices were very common, and often detrimental to the consumers' health. Legislation against them was enacted in some European countries before or around 1880, and also in some states of the U.S. Journals and large books containing advice in the fight against adulteration were published (e.g., Chevallier-Baudrimont 1882). Polarimeters could in various cases aid in this fight, giving rapid and definite results. The sugary syrup that was produced by hydrolysis of starch from potatoes etc. in Europe from around 1820, was legitimately used in various wares such as bread or distilled spirits. However, it was considered fraud when the starch syrup was added surreptiously to the sugar syrups of commerce (Soubeiran 1850), or when sucrose or starch syrup was added to honey or glycerine (Pohl 1861, König and Karsch 1895, Lehmann and Stadlinger 1907). Glucose, dextrin, pentosans or such foreign matters were sometimes found in spices (Hanus and Bien 1906). Neubauer (1876) writes a detailed account on unwanted admixtures of starch sugars to wine and fruit juices; diluted juices and other fruit products were studied by Juckenack and Pasternack (1904). Tony-Garcin (1887) emphasizes that "The falsification of wines by sugar, glucose and dextrine… is most widespread". Steeg and Reuter (1888) advertise a type of polarimeter dedicated to the testing of wine, but the problem persisted for quite a while yet (Sidersky 1895, p. 124-126, Bornträger 1898, Rocques 1900, Fresenius and Grünhut 1921).

Watering-down of fresh milk was detectable through polarimetric measurement of its lactose content (Poggiale 1849, Wiley and Ewell 1896). The amount of sucrose added to condensed milk could also be estimated (Vernois and Becquerel 1853, p. 133-137, Bigelow and McElroy 1893, Patein 1907, Feder 1914). Costly plant essences for use in perfumes and other cosmetics, and the inactive linseed oil from which paints were made, were sometimes diluted by cheaper oils (Gladstone 1864, Aignan 1890, Sidersky 1895, Piesse 1903) and even by turpentine (Buignet 1861a, Maier 1865, Gerber 1896, Rolfe 1905). Spirits of wood turpentine in turn were frequently adulterated with optically inactive mineral oil (Herty 1908). This affected the optical activity and other easily measurable properties (density, refractive index, etc.) of a product. Although adulterants could be chosen such that one of these properties remained within the limits of natural variations in a genuine substance (Haller 1897), imitating all of them would have been difficult. Polarimeters could also be used in assaying tartaric acid (Colson 1896, Kenrick and Kenrick 1902), alkaloids such as quinine and related compounds (Wolff 1881, Koppeschaar 1885, Lenz 1888, Rolfe 1905, Rabe 1910), and preparations of terpenes like camphor for pharmaceutical purposes (Deussen 1909, Mameli 1911).

Polarimeters had some connections with the development of the starch industry in Europe in the 19th century, as noted in section 12.4. In the U.S. it was found that corn (from maize) was very well suited for the production of sugar compounds with the aid of acids, and later enzymes. This industry had taken off on a large scale by the early 1870s, and the main products that were obtained from the starch were called "glucose" and "grape sugar". Both however were in fact mixtures of glucose, maltose, dextrin and water, see for instance Bryan (1911) who reports on the composition of various U.S. starch sugars. They were not as sweet as sucrose, but cheaper and probably less unhealthy in the long term. These products soon became popular with swindlers (Higel 1883),

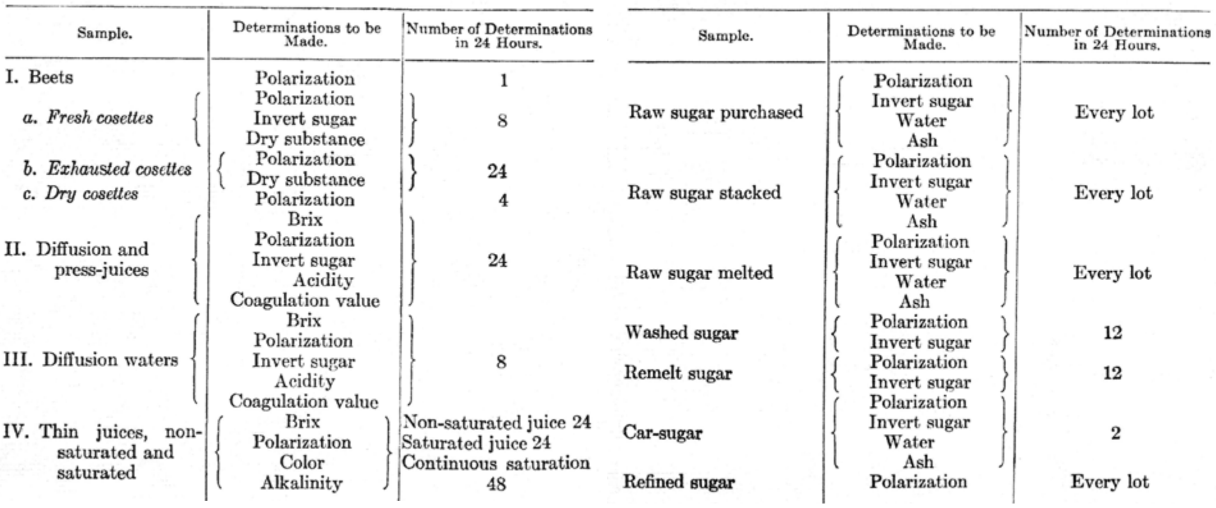

Sample.	Determinations to be Made.	Number of Determinations in 24 Hours.
I. Beets	Polarization	1
a. Fresh cosettes	Polarization Invert sugar Dry substance	8
b. Exhausted cosettes	Polarization Dry substance	24
c. Dry cosettes	Polarization	4
II. Diffusion and press-juices	Brix Polarization Invert sugar Acidity Coagulation value	24
III. Diffusion waters	Brix Polarization Invert sugar Acidity Coagulation value	8
IV. Thin juices, non-saturated and saturated	Brix Polarization Color Alkalinity	Non-saturated juice 24 Saturated juice 24 Continuous saturation 48

Sample.	Determinations to be Made.	Number of Determinations in 24 Hours.
Raw sugar purchased	Polarization Invert sugar Water Ash	Every lot
Raw sugar stacked	Polarization Invert sugar Water Ash	Every lot
Raw sugar melted	Polarization Invert sugar Water Ash	Every lot
Washed sugar	Polarization Invert sugar	12
Remelt sugar	Polarization Invert sugar	12
Car-sugar	Polarization Invert sugar Water Ash	2
Refined sugar	Polarization	Every lot

Figure 27-11. Partial lists of the determinations required for analytical control in beet-sugar production (*left*) and in sugar refineries (*right*). Polarization is prominent in both cases. From Wiechmann (1914)

being mixed in with molasses (Casamajor 1881) and household sugar as well as products like preserved fruit, jams, syrups and honey (Krug 1902), often at enormous profits. Lock et al. (1882) and Browne (1912) recommend a method due to P. de P. Ricketts (1879) and C.F. Chandler for detecting admixture of grape sugar in cane sugar and various sugar products. The method involved measurement of the optical activity of a solution of the material at 87°C after inversion by acids. Federal legislation on the quality of foodstuffs (The Pure Food and Drugs Act) was not passed until 1906 after a long struggle. As an example of the need for such measures, it was pointed out in the national press in 1905, that of all the "maple syrup" sold in the U.S. hardly more than 5% was actual maple syrup; the remainder tended to be corn syrup dressed up with imitation colors and flavors. The chief pioneer in this struggle was H.W. Wiley, who also happened to be one of the first Americans to become acquainted with polarimeters and to use them in research on sugar products (Wiley 1880, 1884 and others). The above-mentioned legislation, largely drafted by him, provided for the establishment of the U.S. Food and Drug Administration. The importance of accurate measurements on sugar products was also one of the main reasons for the setting up of the National Bureau of Standards in 1901. Successes of the N.B.S. in that field during its first few years greatly enhanced its reputation (Singerman 2007).

Steady quality control and breeding experimentation on beets was an important factor in sugar production, see for instance Pellet (1893) and Pack (1927). The effects of different growth conditions, schedules and techniques of harvesting, etc. needed to be looked into in order to maximize yields (Lock et al. 1882, Ch. VIII; Saillard 1913, p. 266-309). Growers gradually succeeded in increasing the average amount of sugar in the beets from about 7% per weight in 1850 to 18% around 1920. Special polarimetric methods were developed (e.g., Hiltner and Thatcher 1901) in order to estimate rapidly the sugar content of beets. An instrument designed by Stammer (1887, see Schmidt & Haensch 1896, Landolt 1898 and Browne 1912, p. 143-145) is illustrated in Fig. 29-9. In the competition with cane sugar, polarimeters also were essential for the constant monitoring of processes at all stages within both beet factories and refineries (Wiechmann 1914, Fig. 27-11), for limiting any losses of sugar into residual products (Claassen 1894, Saillard 1913, p. 120-125), and so on.

By 1900 or even a decade earlier (published sources are not consistent on this point) the world production of beet sugar had overtaken that of cane sugar. The importance of polarimeters is reflected in a statement by a spokesman for the sugar industry in England, quoted in The Times on 8 Feb. 1916 when new domestically produced instruments were launched on the market: "…that the present highly-developed state of the sugar industry was to be ascribed more to the control exercised in that industry by the polarimeter than to any other cause.". In the U.S., production of beet sugar was initiated in some states before 1870 but failures were frequent. The industry did not expand much until the very end of the century, when growers had gradually learned about suitable climates, soils, strains of beet, harvesting techniques, processing methods and so on. Like in Europe, the use of polarimeters may have been a significant contributor to the increase in number of U.S. beet factories from 9 in 1897 (J. Franklin Inst. 145, 232, 1898) to 91 in 1917 (American Sugarbeet Growers Association, Internet document). Imported saccharimeters of many types were being offered for instance in catalogs by Richards & Co. (1896), Bausch & Lomb Optical Co. (1902), Henry Heil Chemical Co. (1903), and E.H. Sargent & Co. (1910). In a paper in J. Ind. Eng. Chem. 12, 803-805, 1920 S.J. Osborn declares that without the polariscope "...the sugar industry would still be in the dark ages.".

28 More research on Iceland spar, 1880-1900

28.1 Etch figures in Iceland spar and other crystals

Etching and dissolution is a method in crystallographic research, first described by J.F. Daniell (1816) on several substances including carbonate of lime (provenance not specified). In the latter part of the 19th century, acidic or alkalic fluid was left on a polished surface of a crystal for some time, and the surface was then inspected in a microscope after removal of the fluid. It turns out that the surfaces are not dissolved evenly in layers; rather, the fluid often leaves small pits. Such "etch figures" can be very regular in shape (Fig. 28-1), reflecting the symmetry elements of the crystal. This may help in assigning a crystal specimen to a symmetry class, which is sometimes difficult to do from its appearance, goniometric results etc. Etch studies were also connected with measurements of the hardness of crystals, and new techniques of hardness determinations on Iceland spar and other materials were developed: see Pfaff (1883) and Fig. 28-1.

Iceland spar from Iceland did play a part in the history of these methods. Among those who wrote about etching experiments on Iceland spar before 1900 were Baumhauer (1869), Meyer (1883), Ebner (1884, 1885) and Hamberg (1890). A related field of research was concerned with the rate of dissolution of Iceland spar under various conditions (e.g. Cesaro 1889, Spring 1888, 1890, Hamberg 1895). Others investigated the form that an Iceland spar sphere might assume (Lösungskörper) after being immersed in an etching fluid (Lavizzari 1865, Gaubert 1901). The light spots mentioned in section 21.3 above, also investigated by Schmidt (1888), may in some cases have been related to dissolution in progress where the crystals were found.

28.2 New measurements of refraction in Iceland spar and other minerals, for comparison with Huygens' and Fresnel's theories

In the opinion of Hastings (1888) in the U.S., the experiments by Glazebrook (1880a, see section 21.2) confirmed the hypothesis of Huygens regarding the propagation of the extraordinary ray in Iceland spar to an accuracy of 1/10,000. Hastings himself improved Glazebrook's results in a new series of measurements on spar prisms with yellow sodium light, bringing disagreement with theory down to 1/500,000. It may be mentioned in passing that Americans were for most of the 19th century well behind Europeans in research on optics, mineralogy, and various other branches of science discussed above. In the manufacture of optical instruments they did not get much done before 1916, but at around that time they overtook Europe in matters regarding for instance photometry and illumination.

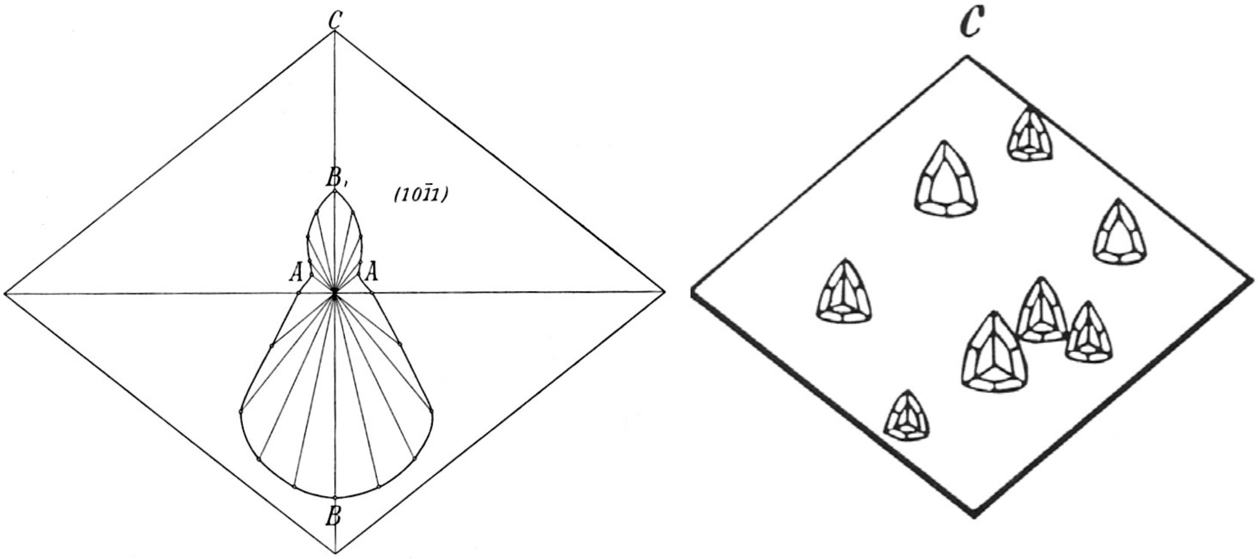

Figure 28-1. *Left:* Measurements of hardness on a cleavage surface of Iceland spar, made with a sklerometer. The length of each straight line is proportional to the force needed to scratch the crystal in that direction with a diamond point. The diagram is probably taken from a doctoral thesis by E. Müller in 1906 (Linck 1923). *Right:* A surface of Iceland spar after etching with hydrochloric acid. The results (Linck 1923) closely duplicate those of Baumhauer (1869). C is the obtuse angle of the crystal.

Glazebrook (1882), Basso (1883), Schrauf (1885-86), Conroy (1886), Nörrenberg (1888), Schmidt (1889) and Verschaffelt (1896) made measurements on the refraction and reflection of light at surfaces of Iceland spar. They improved or extended the experimental procedures formerly applied by Brewster (1819), Seebeck (1831) and Neumann (1835b, 1837), and also the theoretical interpretations of Malus, Biot, and Abria (1873). P. Drude who had been investigating the reflection of light from calcite, rock salt and other crystals (Drude 1889a), disagreed with Schmidt about the effects of polishing upon the results of such measurements (Drude 1889b, see also Spurge 1887).

W. Kohlrausch (1878), Danker (1886), Pulfrich (1887) and Mülheims (1888) measured the refractive indices in Iceland spar, selenite and other crystals using total reflection. Their results agreed with formulas that Senarmont, Ketteler, and Liebisch (e.g. 1885) had derived from Fresnel's theories. Carvallo (1890) confirmed the conclusion of Swan (1849) that the ordinary index in Iceland spar was not dependent on direction.

Few other crystalline materials were investigated in any detail after 1880 with respect to the theories of Huygens and Fresnel on angles of incidence and refraction. However, McConnel (1886) studied refraction in quartz, and Brunhes (1893) measured with thoroughness internal reflections in quartz and Iceland spar. Brunhes' results were in agreement with formulas from J. MacCullagh which have been mentioned above. Born (1887) made a limited study on dolomite and anglesite, for comparison with theoretical results by Liebisch (1886). Additional studies of this kind after 1900 are reviewed in Handbuch der Physik 20, p. 650, 1928; for instance, Nakamura (1903) found that the hypotheses of Huygens and Fresnel are valid in tourmaline in spite of its strong absorption.

As regards the reflection of polarized light from plane surfaces of isotropic insulators, Fresnel's formulas for the intensity of the reflected proportion could be considered to have been confirmed in various indirect ways long before 1890. This intensity had also been measured by Glan (1874) as mentioned in sections 18.4 and 27.8, as well as by H. Knoblauch and others in the case of infrared radiation. More precise measurements were carried out for instance by Glan (1893), Rayleigh, Murphy (1896), see Fig. 28-2, and Lummer (1909), using Nicol prisms and various photometric devices.

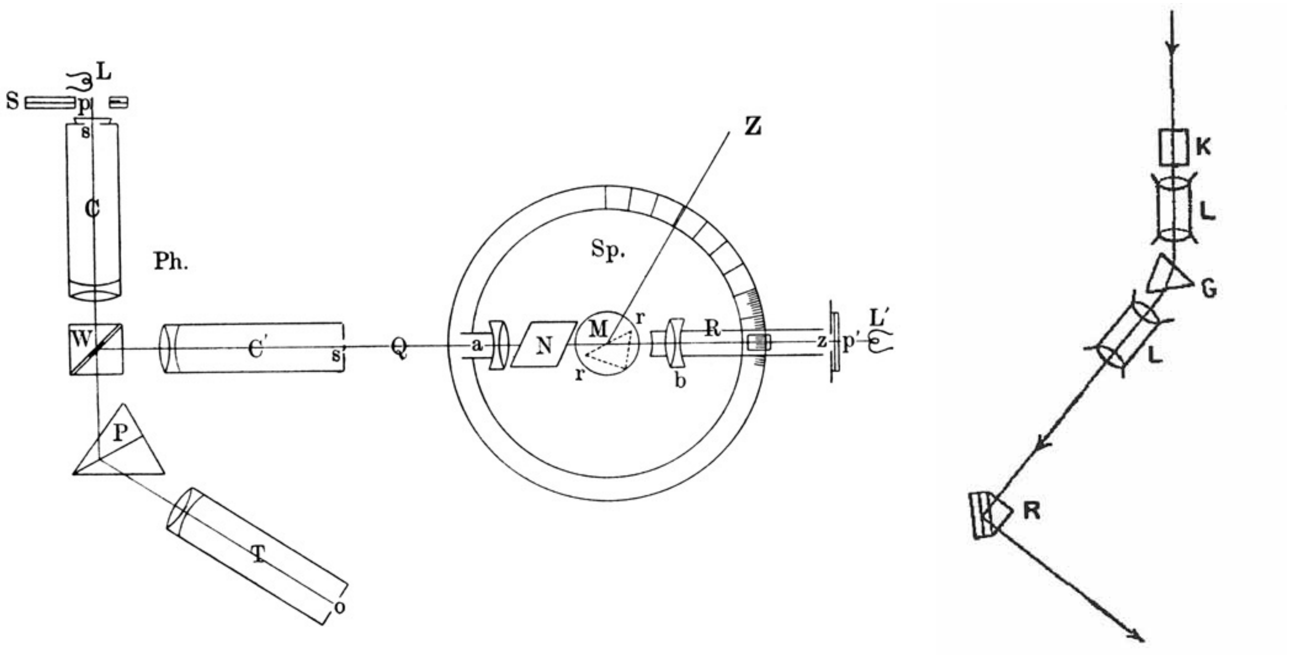

Figure 28-2. *Left:* An experimental test of Fresnel's laws of reflection from a glass surface M, made by Murphy (1896). N is a Nicol prism. The intensity of the light is measured on the left with a Lummer-Brodhun photometer, a chief rival of polarization photometers. *Right:* Part of Wiener's (1890) setup to study the reflection of light from a gelatine-coated metal surface at R. It provided solid confirmation of one aspect of J.C. Maxwell's electromagnetic theory of light. K is a calcite rhomb.

28.3 Further studies on physical properties of Iceland spar

Müller (1885), Vogel (1885), Offret (1890) and Reed (1898) charted the changes in the refractive indices in Iceland spar as functions of temperature. Benoit (1888) made measurements of the expansion coefficients of Iceland spar over a wide temperature interval with much better precision than in the original interferometric work of Fizeau (section 21.2); these results were very useful later when Iceland spar was being employed in X-ray spectrometry (sections 36.3-36.5).

As interest in research on and with infrared radiation increased, it became necessary to measure its attenuation. See papers by Nichols and Snow (1892), Merritt (1894-95), Königsberger (1897), and Stewart (1897) who used accurate measurements on this attenuation in Iceland spar and other crystals to differentiate between three theories on light absorption in crystals in general. Ultraviolet light will be treated in sections 29.8 and 34.2. The fluorescence of Iceland spar was studied by Lommel (1884), Sohncke (1897) and Schincaglia (1899), among others. Chauvin (1889) was the first to measure the Faraday effect in Iceland spar.

In chapter 15 it was mentioned that Plücker and Beer as well as Tyndall and Knoblauch had shown experimentally around 1850 that the magnetic properties of Iceland spar and some other crystals were anisotropic. Their results however only gave the ratio of the magnetic coefficients in question, but not their absolute values. Rowland and Jacques (1879) attempted measuring these values in many diamagnetic materials, but because of ferromagnetic impurities their attempts succeeded only in the case of bismuth and calcite. Voigt and Kinoshita (1907; Voigt 1910, p. 494) say that due to other flaws in the study of Rowland and Jacques, the first significant measurement of the diamagnetic coefficients of any crystal was performed by Stenger (1883) on spar from Iceland. W. Thomson (1851) had derived an expression for the torque acting on a sphere made from a uniaxial diamagnetic crystal, when suspended in a homogeneous magnetic field. His predictions were fully verified by König (1887) and Stenger (1888) who measured periods of oscillation for spheres of quartz and (presumably Icelandic) calcite in fields of different intensities. They also concluded that the magnetic susceptibilities of the two minerals were independent of field strength, contrary to the case for ferromagnetic materials. Knowledge of these properties was quite valuable, although it did not help in understanding the structure of crystals until after 1930.

28.4 The discussion on the aether and Maxwell's theory, to the 1890s

J.C. Maxwell died in 1879, but physicists took his electromagnetic theory more and more into account in optics as supporting evidence accumulated. See Kirchhoff (1876), Lorentz (1877, 1878), J.J. Thomson (1880), FitzGerald (1880), Rayleigh (1881a), Glazebrook (1882, 1885, 1888), Gibbs (1882, 1888, 1889), Basso (1885) and Kolácek (1888). Some of these papers involved polarized light, e.g. those of FitzGerald and of Basso. They demonstrated that from the electromagnetic equations one could reach the same conclusions on reflection and refraction at boundaries, both of isotropic and anisotropic materials, as from the elastic-aether theories; this had not been done by Maxwell himself. FitzGerald based his theoretical work to some extent on ideas from MacCullagh (1839, cf. section 10.3), where the aether was able to store energy in rotational motion. It so happened that equations for light propagation similar to those of Maxwell could be derived from MacCullagh's rather odd aether concept. FitzGerald also found that the Kerr electro-optical effect could be understood on the basis of these theories. His 1880 paper concludes: " …the foundation has certainly been laid of a very great addition to our knowledge, and if it induced us to emancipate our minds from the thraldom of a material aether it might possibly lead to most important results in the theoretical explanation of nature.". Not everyone was willing to discard the aether, however, for instance W. Thomson (1888, 1890; he became Lord Kelvin in 1892) who proposed a mechanical model containing gyrostats to imitate MacCullagh's (1839) aether. Glazebrook (1888, 1889) applied Thomson's ideas to double refraction and various other optical phenomena, without mentioning those of Maxwell. Larmor (1894) added point-like singularities to Thomson's gyrostatic aether, which he preferred to Maxwell's "defective" theory.

The experiments of H. Hertz (1888) on electrical waves (as they were called) convinced many scientists of the validity of Maxwell's views. Hertz' waves had much greater wavelengths than light, of the order of meters, but he could show that they had comparable properties with respect to reflection, refraction in insulating materials, and polarization. Further observations in the following years, often involving polarized waves, provided additional support for the electromagnetic character of light. In particular, experiments by Wiener (1890) attracted much attention. In these, monochromatic light was reflected (both normally and at 45° angle) from a metal surface covered by a thin layer of gel containing photosensitive silver halide (Fig. 28-2). Observations with polarized light (produced with an Iceland spar rhomb) were an important part of these experiments. Wiener could demonstrate among other things that the electrical field of a light wave oscillated in the direction which Fresnel had considered to be the vibration direction of the aether several decades previously. The light formed standing waves in the gel, and dark stripes appeared in it where the amplitude of the electrical field was greatest: it is therefore the electrical field of the light wave, rather than its magnetic field, which is mostly responsible for its chemical action. Wiener also showed that the electrical field component parallel to the metal surface was zero, in agreement with Maxwell's theories and with the observations by Hertz on low-frequency waves. According to Winkelmann (1906, p. 1025), that type of interference had not been observed before with light waves. Drude and Nernst (1891) repeated Wiener's experiments using a 3-cm plate of Doppelspat and emulsions containing fluorescent compounds instead of his photographic ones, obtaining similar results. This work encouraged a variety of other research on varying electrical fields; see for instance the experiments of Righi (1894) and Lebedew (1895) on double refraction and polarization of electromagnetic waves. The above and other discoveries also provided a basis for the first practical method of color photography, for which G. Lippmann was awarded the Nobel prize in physics in 1908.

A good overview of the state of theoretical optics appeared in the book by H. Poincaré (1889, 1892). A large part of that book is dedicated to polarized light, and Poincaré proposed a new method of describing its state of polarization. This "Poincaré sphere" is still in use. Around 1890, Hertz, Lorentz, O. Heaviside, L. Boltzmann and others explained at length Maxwell's electromagnetic theory in more understandable terms than those used in Maxwell's own papers or his Treatise (Maxwell 1873). The discussion on the behavior of light in crystals and other materials continued, see e.g. Rayleigh (1888, reflection from twinning planes), Fletcher (1891), Voigt (1891), Basset (1892) and Ketteler (1895). While Voigt acknowledges that Hertz' discoveries strongly point to an electrical nature of light, he claims that his own long-standing theoretical studies are of sufficiently wide generality for this question to be irrelevant to them. As the electromagnetic theory gained ground, it was applied to new situations such as the propagation of waves subject to various boundary conditions, the dispersion and absorption of light in transparent media (Helmholtz 1892, Ketteler 1893), diffraction at a conducting half-plane (Sommerfeld 1896), the Kerr magneto-optical effect (Goldhammer 1892, Leathem 1897), and so on.

Finally it may be recalled that in his work on light in biaxial crystals, Fresnel (1822c) derived equations for what he called "the wave surface". It turned out to have various interesting geometrical properties, which were studied by tens of physicists and mathematicians in the 19th century. Among those that have not been already mentioned above, are well-known names like A. Cayley, W.R. Hamilton, and S. Kowalewski. These theoretical contributions were reviewed by Wölffing (1902).

29 On the main types of instruments employing polarized light, c. 1890-1930

It is evident from the story so far that a wide range of fields within the natural sciences was benefiting from the use of equipment containing Nicol prisms. The principles and techniques of many of the experimental methods are for instance reviewed in the books by Bouasse (1925a,b). Comprehensive knowledge of such applications can be obtained through perusal of a large number of scientific journals and books from the period 1890-1950 or so. However, cost-free access to these publications on the Internet is in many cases restricted (presumably due to copyright reasons) which has slowed down my research somewhat. In the following sections it will be attempted to illustrate the variety of instruments available, and in the next chapter some new research topics will be introduced. A field which is only mentioned briefly in the next section, is the overall development of earth science and exploitation of mineral resources; a thorough survey of the role played by polarizing microscopes and specialized petrographic devices within this field alone in the above period might well fill an entire book.

29.1 Petrographic microscopes

Many scholarly books on mineralogy and crystallography appeared in 1890-1930. Among these were works by Soret (1893), Groth (1905), Wallerant (1909), Rinne (1922a,b) and Friedel (1926). New editions appeared, even repeatedly, of popular textbooks or monographs by for instance H. Rosenbusch, G. Tschermak, C.F. Naumann, F. Rutley and E.S. Dana. These works reflect rapid developments in petrographic microscopes, techniques of observation and measurement, and consequent accumulation of knowledge, see Figs. 29-1, 29-2 and 29-3. Weinschenk (1901 and later), Becke (1904), Duparc and Pearce (1907), Wright (1911b), Johannsen (1914), Larsen (1921) and others wrote practical handbooks on the use of this type of microscopes. Weinschenk claims in an introduction to his book, that the great advances made in the science of petrography (Gesteinskunde) during the last one-third of the 19th century were solely due to the application of microscopic methods. Similarly, Bonney (1892) writes that the microscopic observations clarified many aspects of the genesis of rock formations worldwide, and of their subsequent alteration. These aspects had previously been afflicted with various incorrect interpretations: “The microscope has dispelled many an illusion, and reduced a chaos to order.”. However, the classification and naming of rock types still varied a great deal between countries at the turn of the century (Hobbs 1900).

Morozewicz (1898) estimates that at least a third of the currently appearing literature in geology concerns microscopical petrography, which had then been progressing very rapidly. Hundreds

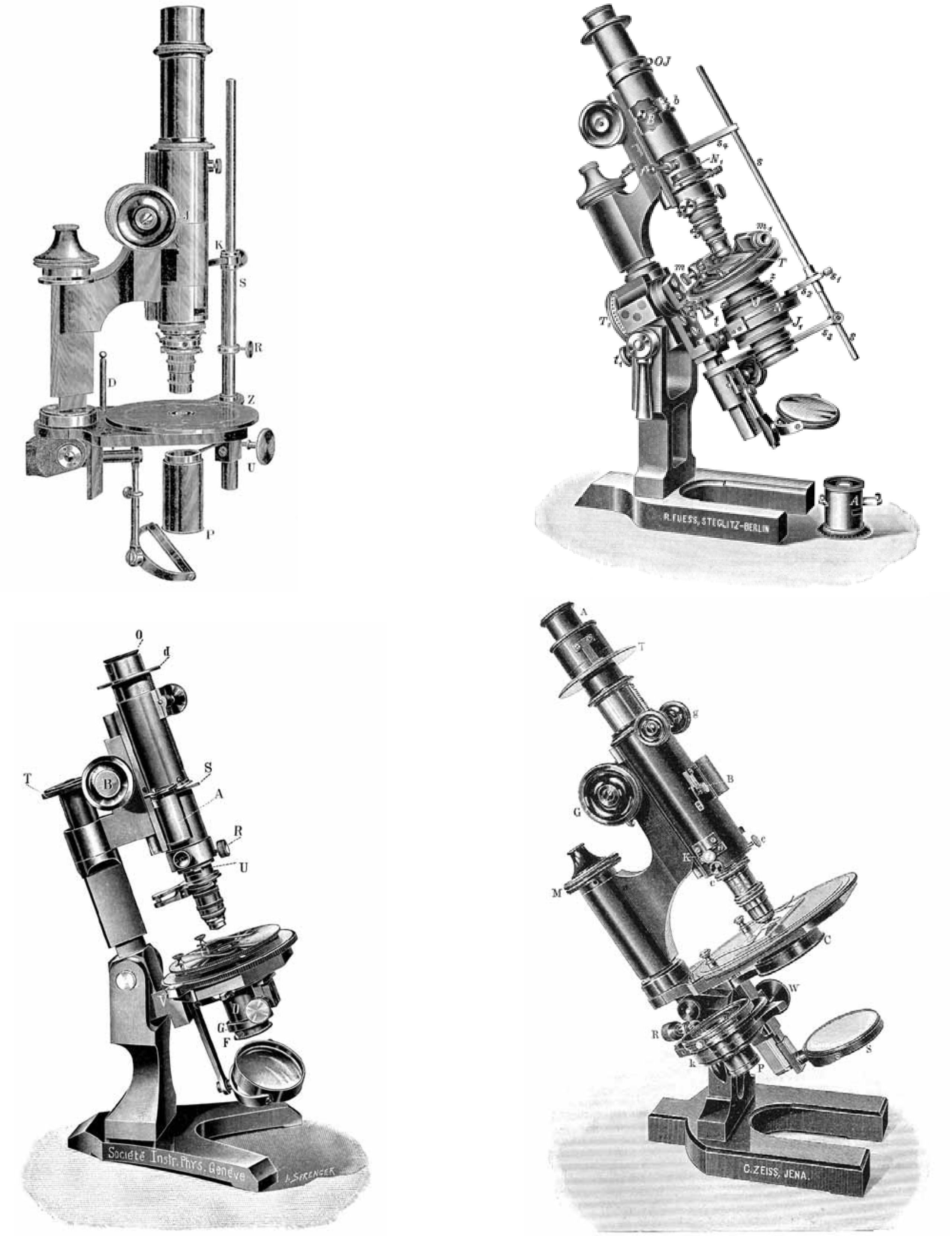

Figure 29-1. Polarizing microscopes around 1900. *Top left:* The microscope of Sommerfeldt (1905), one of the first where the polarizer and the analyzer were connected with a bar. The observer could then turn them both by the same amount, which was often an advantage. *Right:* A microscope designed by V. de Souza-Brandao in 1903 and manufactured by R. Fuess from 1910. The figure is taken from Johannsen (1914). *Bottom left:* A microscope produced by Société Genevoise (Duparc and Pearce 1907). *Right:* A microscope from C. Zeiss (Czapski 1891a).

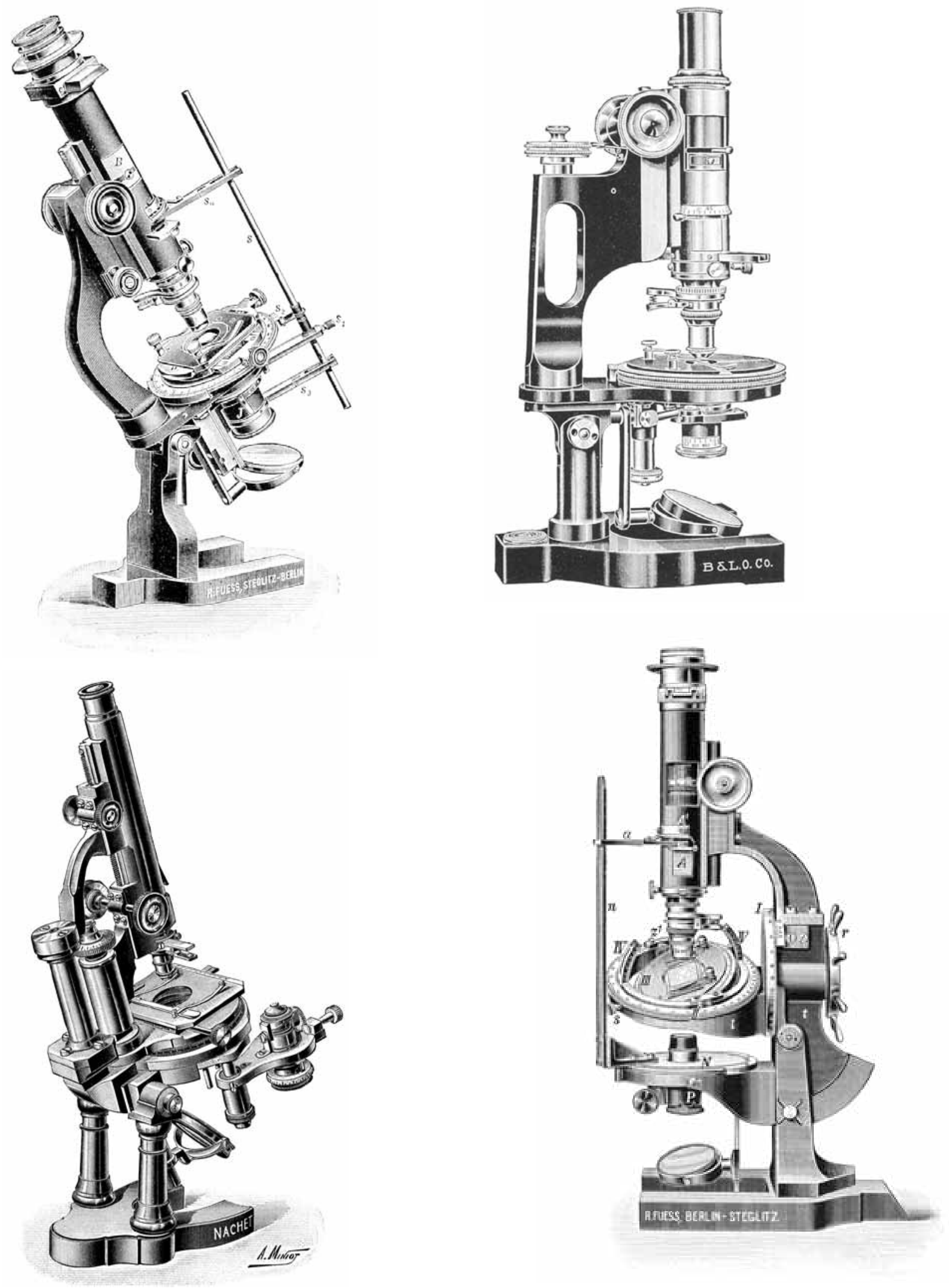

Figure 29-2. Microscopes available around 1900 or soon after. *Top left:* A microscope designed by Wright (1911a) and manufactured by R. Fuess. *Right:* A Bausch & Lomb microscope, the figure is from Johannsen (1914). *Bottom left*: A "grand modèle" offered by A. Nachet´s workshop from around 1898. The figure is from their catalog (Nachet 1979). *Right:* Microscope with a universal stage, invented by Fedorow (1891) and produced by R. Fuess from about 1912 (Weinschenk 1925).

if not thousands of new minerals were discovered, described and characterized crystallographically with the aid of polarizing microscopes in 1890-1930. Only a few examples will be given here: baddeleyite (Fletcher 1893), tarbuttite (Spencer 1908), natrochalcite (Palache and Warren 1908), creedite (Larsen and Wells 1916), butlerite and ransomite (Lausen 1928). Sometimes, examination showed that minerals with two or more different names were identical; one instance of this was brazilite which turned out to be the same as Fletcher‘s baddeleyite. In the preface to his book on certain valuable applications of mineralogical knowledge, Berg (1915) states that "…today, hardly any major effort in ore prospecting takes place without the broad involvement of microscopical petrography, which is particularly important in determining the genesis of the deposit.". However, even by 1930 many uncertainties in mineralogy remained. These were gradually resolved by new methods such as X-ray spectrometers, and later electron microprobes. These have in recent decades gradually taken over the tasks of the polarizing microscope, but our understanding of minerals and rocks is attributed more to its use than any other single instrument (to quote M.E. Gunter in J. Geosci. Educ. 52, p. 34, 2004).

Among steps of progress in petrographic techniques was the construction (Dick 1889, Fig. 22-5) of a microscope where the polarizer and analyzer are rotated in unison. This method (which was more practical than rotating the stage with the thin-section specimen) was soon improved upon by others such as Klein (1895), Sommerfeldt (1904, 1905, Fig. 29-1) and Leiss (1910). Fedorow‘s (1893, section 22.4, Fig. 22-7) universal- or theodolite-stage was also improved by C. Klein, F.E. Wright and others (see e.g. Leiss 1912; Fig. 29-2). As an example of the use of this stage, the directions of the optical axes in many quartz grains in a thin section could be charted; their alignment might be due to tectonic deformation of the rock. Another clue to its value is provided by C.W. Correns in a 1957 centenary Festschrift for the instrument firm of R. Winkel: "… the study of characteristic minerals which were of importance for the oil industry was much advanced by the development of the universal stage.".

Fuess (1891, 1896), Klein (1895), Leiss (1897b, 1898a,b, 1899b, 1908 and more, Figs. 29-3, 29-5), Hirschwald (1904) and Wright (1910, 1911a, Fig. 29-2) presented many novel instruments from Fuess' workshop. Czapski (1891a, Fig. 29-1) and Lincio (1907, Fig. 29-5) introduced new microscopes from Zeiss and Leitz respectively. The latter as well as new models from Bausch & Lomb, J. Swift & Son, and W. Watson & Sons were praised by Spitta‘s (1907) book on microscopy. In order to reduce costs, some attempts were made at using glass-plate reflectors (Fig. 33-2) as polarizers instead of Nicol prisms. Nodot‘s (1877) microscope of this type which was mentioned in section 22.4, was manufactured at least until 1938. It was probably meant for use only in schools and by amateurs, as Leiss (1897c) and Cheshire (1923) consider glass-plate polarizers to be unacceptable in professional microscopes. Halle (1896, 1908) described improved methods in the construction of the various types of Nicol prisms, and Thompson (1905) published a comprehensive review of new or modified types; one more polarizing prism was invented in 1910 by E. Ritter and A. Frank of B. Halle Nachf. (German patent no. 234940, see Wülfing 1918).

Various improvements were made on Bravais' (1855) half-shade technique for measuring elliptically polarized light, for instance by Nakamura (1905) and Lummer and Kynast (1907). Berek (1913b, Fig. 29-10) described a new type of compensator for petrographic microscopes, where a plate of Iceland spar (about 0.1 mm thick) or another suitable crystal may be rotated in order to change the difference in phase between two polarized rays continuously over wide limits. This type gained much popularity (cf. Ehringhaus 1940, Schumann and Piller 1950, Partington 1953, and a review in Handbuch der Physik, vol. 25/I, 1961) and it is still in use. Leitz (1915), Berek (1915-20), Ehringhaus (e.g. 1920) and others introduced further improvements in polarizing microscopes.

Development of specialized instruments for the measurement of refractive indices and axial

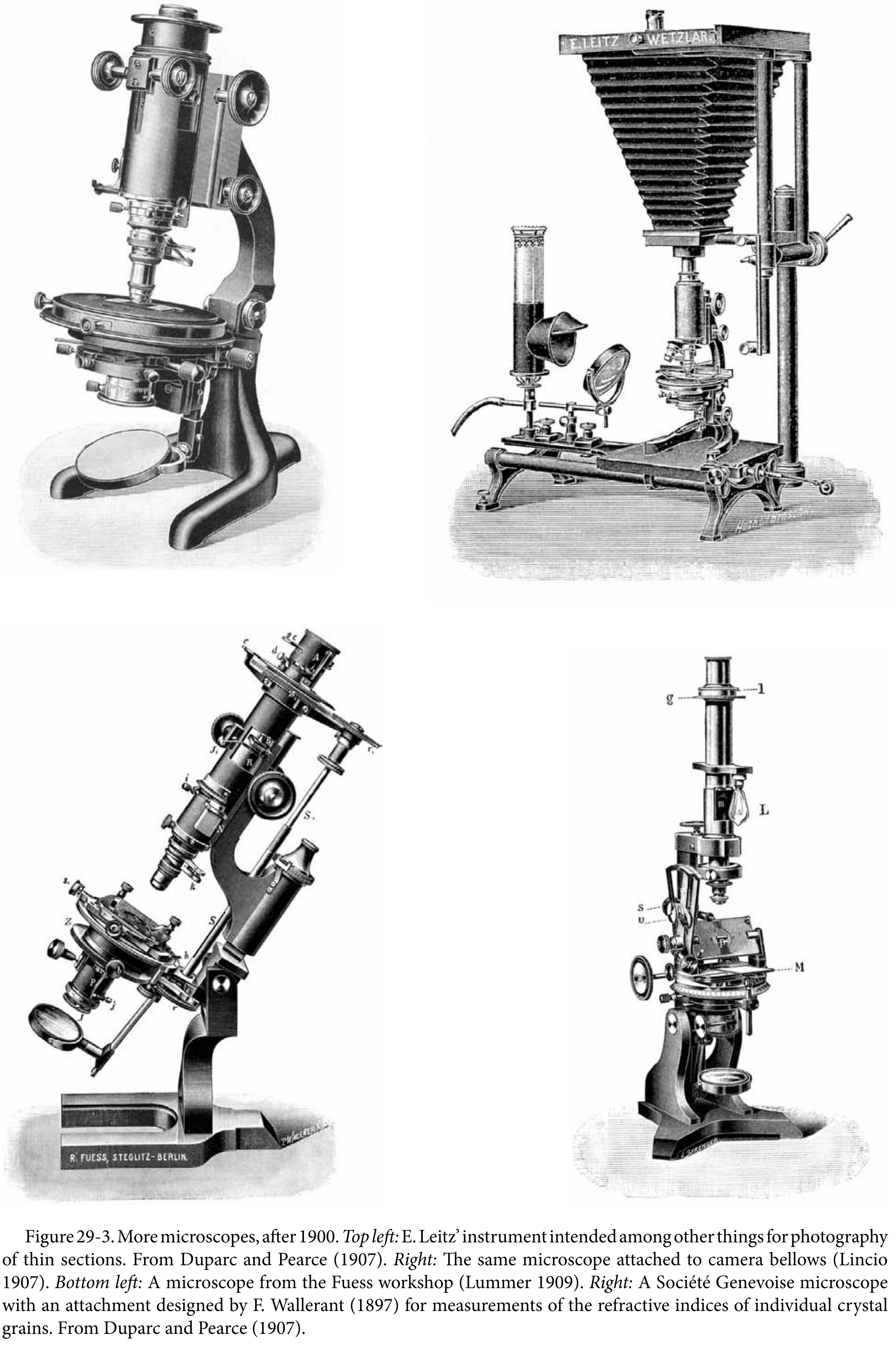

Figure 29-3. More microscopes, after 1900. *Top left:* E. Leitz' instrument intended among other things for photography of thin sections. From Duparc and Pearce (1907). *Right:* The same microscope attached to camera bellows (Lincio 1907). *Bottom left:* A microscope from the Fuess workshop (Lummer 1909). *Right:* A Société Genevoise microscope with an attachment designed by F. Wallerant (1897) for measurements of the refractive indices of individual crystal grains. From Duparc and Pearce (1907).

angles of crystals continued, see e.g. Czapski (1891b, Fig. 29-5), Friedel (1893), Klein (1895, employing immersion liquids), Viola (1897, Fig. 29-5), Wallerant (1897, Fig. 29-3), Wülfing (1898), Stöber (1898), Leiss (1899a,b), Klein (1900, 1902, Fig. 29-5) and Wright (1908a, Fig. 29-7). New demonstration equipment (such as projectors) for mineralogical education was also constructed, by Pellin (1897), Leiss (1897-98, 1903, Fig. 29-6), Brauns (1903b) and later by Kohl (1909), G. Halle (1910), Berek (1913a, Fig. 29-6), Wülfing (1911, cf. Schmidt 1920a, up to 3500x magnification), and Tutton (1922, Fig. 29-6), among others. It may be recalled that in Nicol prisms the unwanted ray was often disposed of by blackening their outside surfaces; this however could cause overheating in the case of arc lights in projectors. Special designs therefore appeared, where superfluous light was shunted out of the prism (Ignatowsky 1910, Steeg & Reuter 1914, p. 73-74). Some manufacturers offered simple types of microscopes for student use (Fig. 29-7). Spectrometers allowing polarization analysis by means of Nicol prisms were produced (Fuess ca. 1910, Fig. 29-4), as well as apparatus for microscopical examination of crystals in monochromatic light (Fig. 29-6).

Polarizing microscopes and other optical instruments for the study of crystals were sometimes equipped with heating arrangements, as mentioned in sections 18.2 and 27.2 above. They found wide use in research on minerals and industrial materials, for instance in observations on their temperature-dependent double refraction, melting points, and sublimation. Already in the book by Groth (1885, p. 658-660) these instruments are said to be "indispensable for investigating transformations taking place in the various phases of materials". Aspects of crystallization processes were also studied (Doelter 1904), for instance the order in which the various mineral components crystallized in a cooling melt of igneous rocks. Early models employed gas flames, but electrical heaters had also been introduced by 1890. On some such stages, specimens could reach temperatures above 1000°C, even 1500°C. See Fuess (1891), Sommerfeldt (1904), Doelter (1904, 1909, Fig. 27-3), Lehmann (1910), Allen et al. (1909, p. 42-44), Wright (1913a,b), Endell (1921), and Chamot (1921, p. 222-225; Fig. 29-23). Of course it was also possible to cool samples on a stage; Vorländer et al. (1925) observed a change in the crystal structure of phosphorus occurring at -77°C in a polarizing microscope.

Phase changes and chemical equilibria at high temperatures between the main components of synthesized common minerals were charted by the use of heated-stage petrographic microscopes. This research was primarily carried out at the Carnegie Institution of Washington, by Allen et al. (1909) on diopside, Fenner (1912) on the various forms of silica, Bowen (1914) on pyroxenes, Andersen (1915) on olivine, Rankin and Wright (1915) on calcium-aluminium silicates, Rankin and Merwin (1918) on magnesium-aluminium silicates, Ferguson and Merwin (1919) on calcium-magnesium silicates, and others. These authors point out the value of microscopically observable features that aid in unravelling the history of rock formations and the compositions of their constituent minerals: twinning, extinction angles of polarized light, zoning, evidence of resorption, and so on.

It should also be kept in mind here that scientists are interested in many crystalline materials in addition to the minerals found in nature. Thus, the making of cement for building purposes was known by the ancient Romans, but then largely forgotten until the late 18th century. "Portland cement" was patented in 1824. Late in the 19th century, a turning point in research on cement occurred when H. Le Chatelier (1882) and A.E. Törnebohm investigated its properties with polarizing microscopes. The journal Moniteur Scientifique (vol. 18(i), p. 294, 1904) refers to an 1895 source stating that in his 1887 doctoral thesis Le Chatelier distinguished the two chief constituents of cement clinker with the aid of this method. An extensive study at the Carnegie Institution on crystallization processes and equilibria in composites of calcium-, aluminium-, and silicon oxides (Day and Shepherd 1906, Shepherd and Rankin 1909, and other papers), led in particular to im-

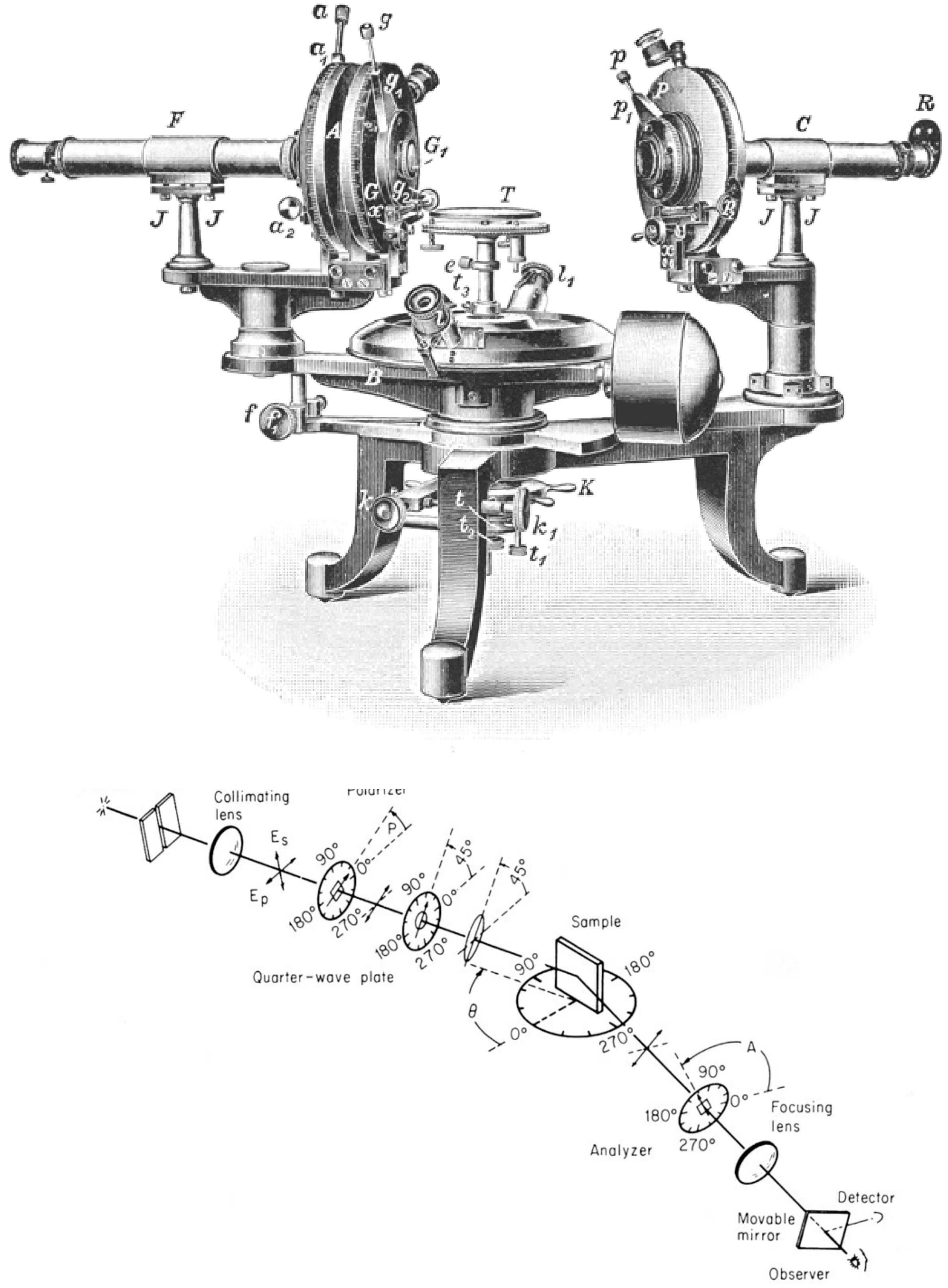

Figure 29-4. *Top:* A sophisticated instrument for precise measurements of the state of polarization of light at various wavelengths, improved by Leiss (1905) from an original design by T. Liebisch. Light is incident from the right, a prism or a diffraction grating may be placed on the platform T. From the catalog of Fuess (ca. 1910). *Bottom:* Diagram of a similar device for testing the change in polarization of light (coming from the left) upon reflection from for instance metallic surfaces and thin films of various materials. Such instruments, which were used by P. Drude and many others from around 1890, later incorporated photoelectric sensors and became known as ellipsometers. They are still important in research on semiconductors. From Bennett and Bennett (1978).

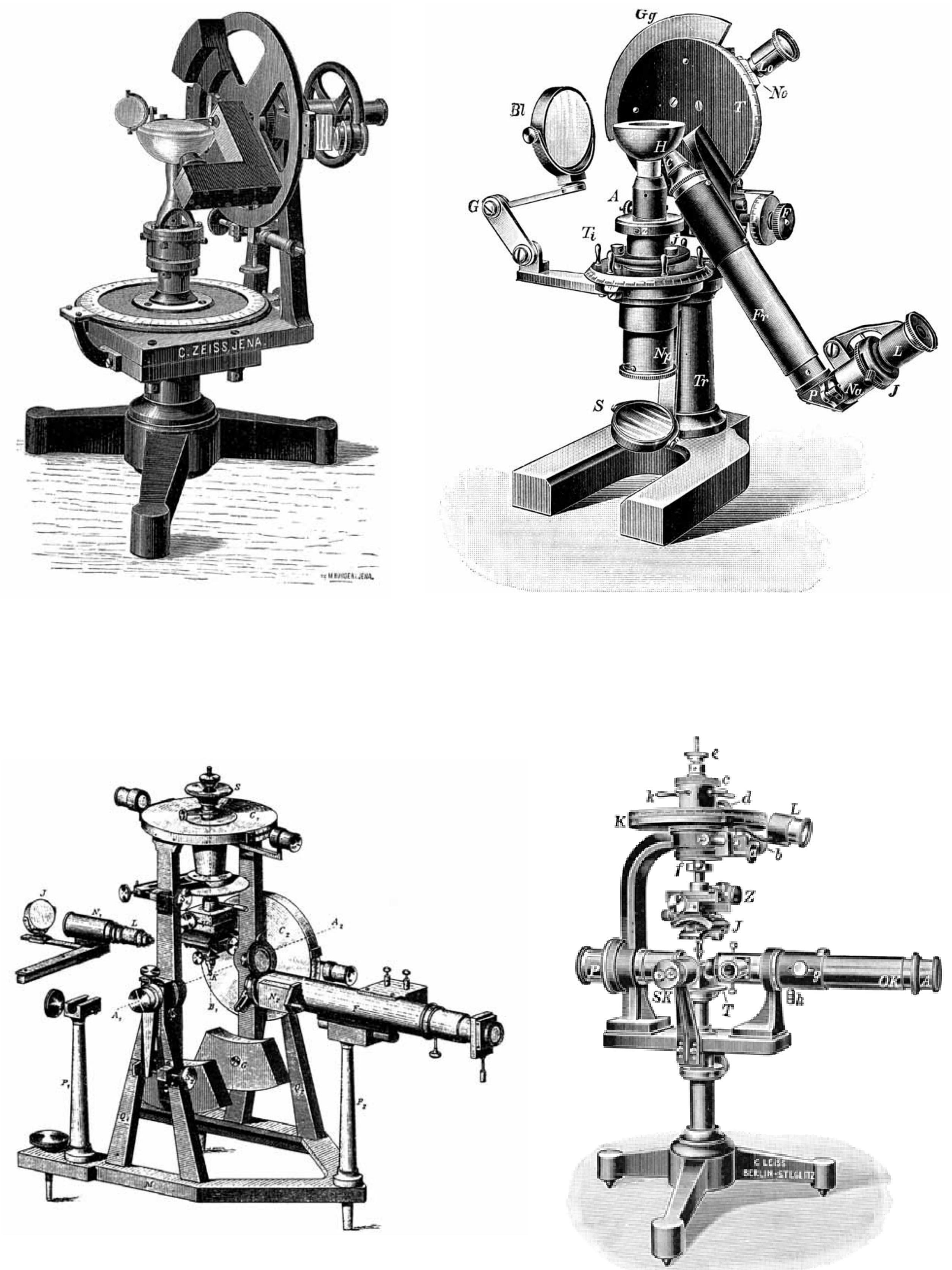

Figure 29-5. *Top left:* Apparatus for measurement of refractive indices of crystals, from C. Zeiss (Czapski 1891b). *Right:* Similar equipment designed by C. Klein (1902) and produced by R. Fuess (Duparc and Pearce 1907). Nicol prisms are at Np and Na. *Bottom left*: A versatile crystallographic instrument described by Viola (1897). *Right:* The axial-angle apparatus of Wülfing (1898) with Nicol prisms at P and A, produced by Leiss (1925).

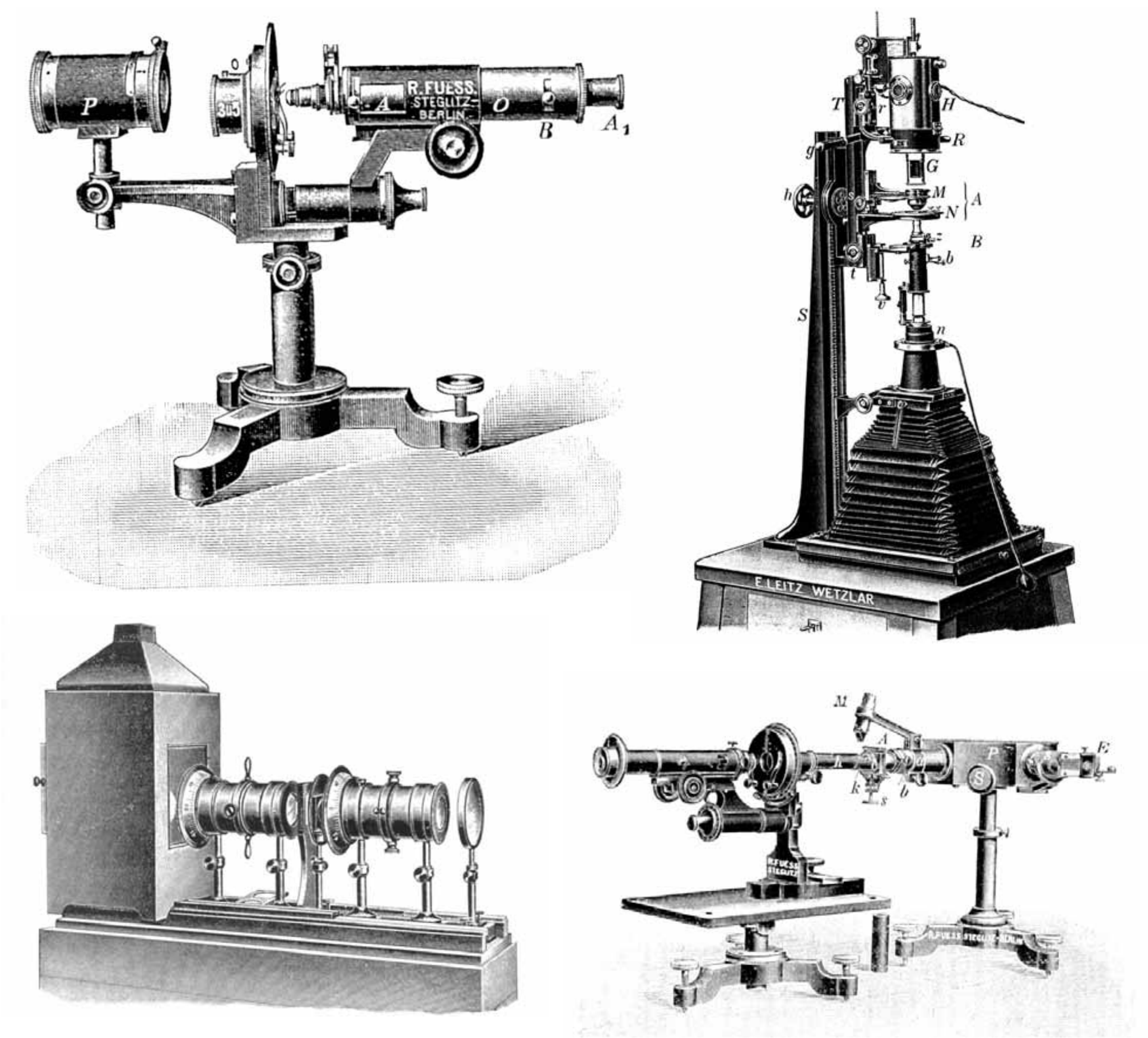

Figure 29-6. Various instruments for research and teaching in crystallography and mineralogy. *Top left:* A projector, coupled to a horizontally mounted microscope from R. Fuess (Leiss 1903). *Right:* A Leitz enlarger for the demonstrating, photographing and drawing of microscope images (Berek 1913a). *Bottom left:* A projector with polarizing prisms for viewing large thin sections. The diagram is from the book by Tutton (1922), and the projector is probably his own design. *Right:* On the very right we have E.A. Wülfing's monochromator light source for the polarizing microscope seen on the left, both manufactured by R. Fuess. The illustration is from Rinne (1922a).

proved understanding of the properties of Portland cement. See a relatively simple stability-field diagram for two mineral constituents in Fig. 29-7. Much of the knowledge which was acquired in such studies by means of polarizing microscopes (Rankin and Wright 1915), would not have been obtained by any other experimental methods available at that time (cf. Rankin 1916, Wright 1916). For references on subsequent research in this field, see papers by Brownmiller and Bogue (1931) and by Tippmann (1931) who himself used Icelandic calcite as raw material in his cement mixtures.

Peck (1919), Endell (1921), Fisk (1934), Bayley (1937) and Hartshorne and Stuart (1950, p. 434-439) state that in the 1920s and 1930s important research similar to the above, was carried out on the composition and thermodynamics of metal oxides and carbonates in ceramics, industrial slags and the like. In the same way, knowledge was improved of the manufacturing processes of glass (e.g. Bowen 1918, Wright 1921), tiles, clays (Schurecht 1922), and refractory materials such as silicon and zircon oxides used for instance in the lining of furnaces and in high-tension insulators. Milligan (1927) has this to say on abrasive materials, which are used in a wide range of activities from dental repairs to the automotive industry: ”The petrographic microscope and microscopic methods in general have proved invaluable tools for the study of abrasives and grinding wheels.”. Such abrasive materials include aluminium oxide (i.e. emery and other modifications) originally recovered by mining but later man-made, and the much harder carborundum (SiC) which was produced in electrical furnaces from around 1890. After 1930 or so, X-ray methods were also employed in the analysis of these compounds.

The above comments on cements, abrasives, etc. may apply equally to zeolites, as microscope research on their structure has contributed to the creation of many new compounds in that class not found in nature. They have found a wide range of industrial applications.

Polarizing microscopes were directly or indirectly connected with progress in various other sectors of materials science in the early 20th century. Liquid crystals have already been mentioned in section 27.2; see a lengthy review of further research on these by Friedel (1922). Two other examples of materials with special properties may be mentioned here; in both cases, investigations on these properties began before 1940, and they became very important in electronics and communications technology in the second half of the century. One case concerns the development of new crystalline materials exhibiting large piezoelectric effects along with electric properties analogous to ferromagnetism. These so-called ferroelectric materials (such as $BaTiO_3$) are for instance used in electrical capacitors and in computer memories. The other case where polarizing microscopes were involved, concerns ferrite magnets which were discovered during investigations of crystals related to the mineral spinel ($MgAl_2O_4$) and to metal silicates of the garnet group. Crystalline anisotropy, as first noted in Iceland spar, is an essential characteristic of ferrites and other “hard” (i.e. high-coercivity) magnetic materials.

29.2 Polarimeters, 1900-30 and later

Many books and papers were written about polarimetric practice in the above period, e.g. by Pellin (1903), Rolfe (1905), Zehnder (1908a), Bureau of Standards (1914, 1918), Schulz and Gleichen (1919), Skinner (1923), and Bruhat (1930). This reflects their increasing use in sucrose and glucose industries, research in organic chemistry and biochemistry, etc. In a review of Rolfe’s book in the Journal of the American Chemical Society it is stated that: “At the present day no laboratory for ordinary research, commercial business, or teaching is considered complete without a good polariscope.”. The more advanced types of polarimeters for analyzing elliptically polarized light (Fig. 29-4), contained wedges or plates from quartz or mica (see Brace 1904a, Wright 1908b, Tool 1910, Szivessy 1921, Skinner 1925). At the other end of the price scale were simple polarimeters for teaching purposes (made e.g. by W. Wilson, see figure in Houstoun 1927, p. 218; Kristjansson 1996) and instruments for clinical testing of urine (Fig. 29-9).

In section 22.2 a half-shade technique was mentioned, dating from 1885 and involving a small extra Nicol prism (Fig. 29-8). The Berlin firm of Schmidt & Haensch became one of the largest producer of such polarimeters and saccharimeters towards the end of the century. Many types of these as well as some from J. Peters (1894; Rolfe 1905, Browne 1912, Fig. 29-9) in Berlin and L. Laurent in Paris were advertised in catalogs of British (Baird & Tatlock 1914) and American (Thomas 1914) suppliers. For instance, precision instruments were offered from 1894 where a second extra prism caused the observer’s circular field of view to be split into three parts (Lippich 1896, Fig. 29-9). There was even a version with a third extra prism (Lummer 1896). The firm also initiated production of saccharimeters with a double compensating quartz wedge which were

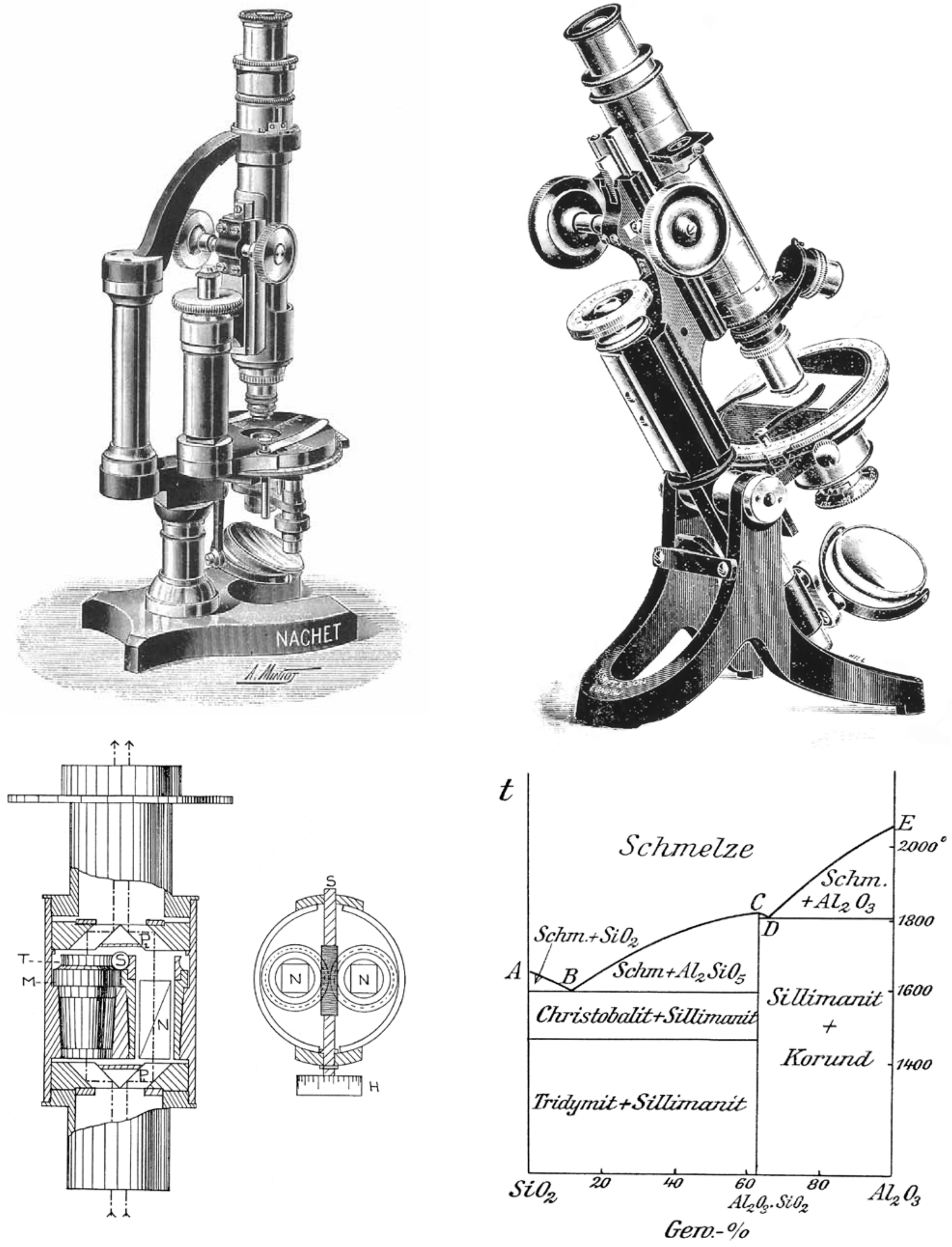

Figure 29-7. *Top:* Two microscopes for student use. The one on the *left* is from A. Nachet's (1979) 1910 catalog and the one on the *right* is from J. Swift & Son (displayed in J. Royal Microsc. Soc., 1907). *Bottom left:* Wright's (1908a) bi-nicol ocular for measuring extinction angles of minerals. *Right:* A stability diagram for mixtures of silica and aluminium oxides, obtained by Shepherd and Rankin (1909) with the aid of Wright's optical observations. From Boeke (1915).

easier to use than previous models (Landolt 1898, Martens 1900b). In the foreword to his book on the optical activity of organic compounds, Landolt (1898) is of the opinion that "…polarimeters are now among the most precise physical measuring instruments.". New saccharimeters produced by J. & J. Fric (see Sargent 1910, p. 211-214) from a design by Bates (1908) further enhanced the reputation of polarimetry in the sugar industry.

One limiting factor in the accuracy of polarimeters was the fact that the yellow sodium light is composed of two spectral lines at 589.62 and 589.02 nm. Disch (1903) was the first to use a recently invented quartz-mercury arc lamp that gave five bright and narrow lines for his study of optical rotatory dispersion. The U.S. Bureau of Standards was an early advocate for a choice of the 546.1 nm mercury line in routine work on sugars (Bates 1906), and designs of these lamps improved in the following years (Armstrong et al. 1908, Bureau of Standards 1914). Cadmium lamps (Lowry 1913b, 1935) and electrical arcs in other metallic vapors also were used increasingly (Lowry 1908, Bruhat 1930, p. 148-154). Scientists thus had access to a multitude of spectral lines, which could be selected by means of monochromator devices (Schmidt & Haensch 1931). This encouraged new research on optical rotatory dispersion in organic compounds, but the measurements were rather cumbersome at the time. The rotatory dispersion later turned out to be of great value in scientific and industrial research on complex chemicals, cf. section 39.1. Sodium lamps were also improved (Beckmann 1912), and they seem to be still employed regularly with the simpler types of polarimeters. Incandescent electrical lamps for saccharimeters of the quartz-wedge type were introduced around 1895, but gas-, kerosene- and other burners remained in use until 1930 at least (Bruhat 1930, p. 115).

As already stated, saccharimeters were often calibrated for direct reading in terms of the concentration of an aqueous sugar solution, using wedges and plates from quartz. International committees dealt with the standardization of such calibrations and of other sugar measurements in the years 1894-1912 (Schulz and Gleichen 1919, Bruhat 1930, p. 279-281, Bates et al. 1942, p. 767-779). Increasing demands were made regarding the precision of the results (see e.g. Pellat 1901, Jackson and Gillis 1920), because large sums of money were involved in the production, trade, and taxation of sugar. Competent official institutions in each country were responsible for issuing calibration certificates for the quartz components (Brodhun 1913), but it was quite difficult to find natural crystals of sufficient size and quality for use in saccharimeters (Soleil 1866, Gumlich 1896, Stanley 1919). Bruhat (1930, p. 111) remarks that perhaps one out of every fifty perfectly transparent quartz specimens actually turned out to be adequate as raw material for high-accuracy polarimeter components.

At the time when the U.S. entered World War I in 1916, almost all polarimeters in that country were of German or Austro-Hungarian origin (Browne 1918). Replacements and spares could not be obtained from workshops in these countries, and due to the military situation manufacturers in France were unable to supply any polarimeters, "…the shortage of which is becoming at present a serious detriment in many industries.". Browne called for the initiation of polarimeter production in the U.S. as soon as possible. Skinner (1923) reveals that the Bureau of Standards did in fact undertake the maintenance of existing instruments in the late war years; without this service "it is difficult to estimate what would have been the consequences of the resultant paralysis to the [U.S. sugar] industry.".

By leafing through the index pages of general chemistry journals such as that of the Chemical Society of London in the first quarter of the 20th century, it may be estimated that up to a tenth of the papers published deal with some studies on optically active compounds. The great impact of research on the three-dimensional structure of organic and later also inorganic molecules where polarimeters played a part, is evident for instance in the book by Stewart (1919) and in the two review papers by Walden (1925a,b). In concluding the former paper, Walden points out that opti-

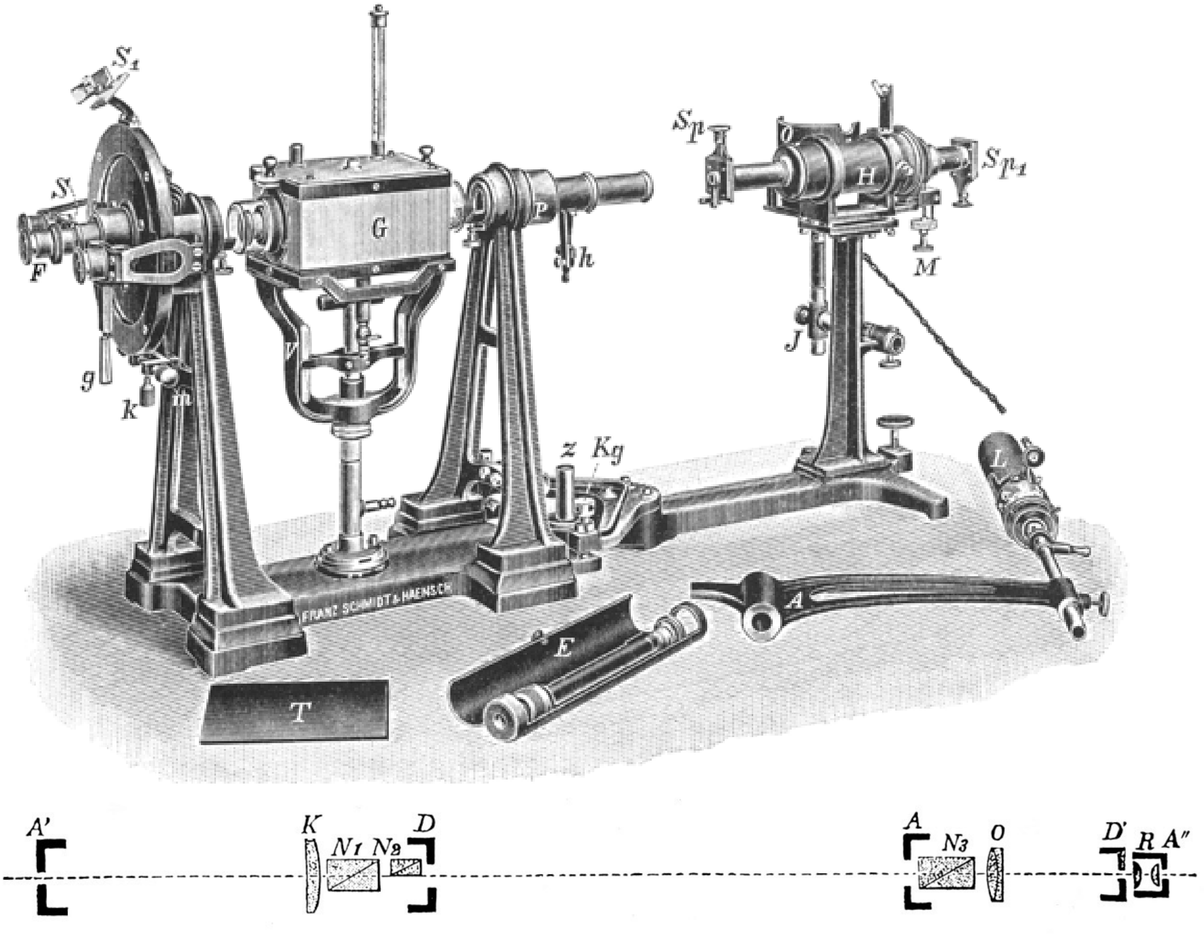

Figure 29-8. Lippich (1885) found a new way of creating a half-shade field in polarimeters, by putting a small Nicol prism (N_2 in the bottom diagram) behind the polarizer: the light source is to the left. Different variants appeared later from H. Landolt and others, mostly to be used in high-quality types of polarimeters for research such as the above instrument. H is a spectroscope, G is a bath for keeping the sample tube at constant temperature. One such tube lies at E in front of the polarimeter, along with a lamp L to be mounted at the right-hand end of the frame. From Wien-Harms (1928).

cally active natural compounds such as terpenes and camphors, alkaloids, proteins, sugars, starch, polyamyloses, cellulose, chlorophyll, tannins, etc. are "at the focus of current interest in organic and biological chemistry, and provide major challenges in the ongoing very lively and admirable chemical research activities". These materials were obtained largely from parts of plants and trees, but also from e.g. algae, fungi, insects, or organs of higher animals.

Concerning the sugars mentioned by Walden, one can in particular point to the many scores of papers published by W.N. Haworth and his collaborators (Fig. 35-1). In their work (based on reactions mentioned in section 27.4), polarimeters were valuable when the atomic configuration of sugars and related hydrocarbons was being established, see Haworth and Law (1916), Haworth (1920, 1932), Haworth et al. (1923 on raffinose), Haworth and Hirst (1921 on cellobiose, 1926 on fructose, 1930 on sugars in general) etc., as reviewed by Haworth (1929). For instance, sucrose was eventually found to be a combination of a six-member α-gluco-pyranose ring (section 27.7) and a five-member ring from fructose (β-fructo-furanose). Numerous contributions on the subject were also made in the 1920s by research groups of C.S. Hudson (see Hudson 1926), J.C. Irvine (Irvine and Patterson 1922), H.H. Schlubach (e.g. Schlubach and Moog 1923) and others. One compound studied by Haworth was ascorbic acid (Vitamin C, $C_6H_8O_6$); optical activity was

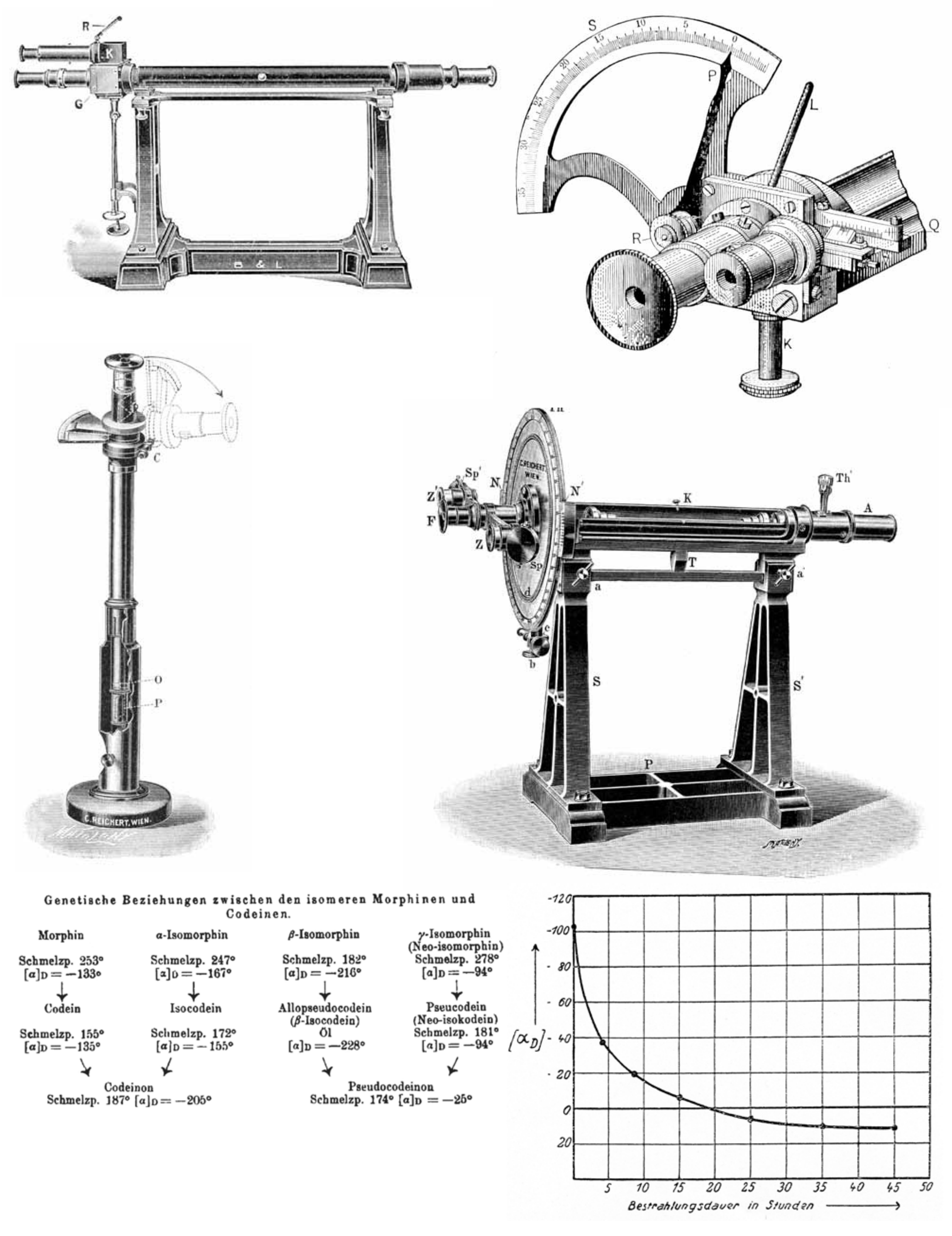

Figure 29-9. *Top left*: A saccharimeter containing a double quartz wedge (Peters 1894) for increased accuracy (Rolfe 1905). *Right*: The observer's end of a Stammer (1887) saccharimeter for rapid estimation of the sugar concentration in beet. From Browne (1912). *Center*: Two polarimeters from the 1908 catalog of C. Reichert in Vienna. On the right is a Lippich-type instrument of 0.01° accuracy, while the vertical polarimeter was designed for measurements on urine and reads 0-10% glucose directly. *Bottom left*: Relations between derivatives of morphine and codeine (Abderhalden 1920). *Right*: A curve showing how ergosterol is gradually converted to Vitamin D by ultraviolet radiation (Windaus and Linsert 1928), as indicated by optical rotation values.

among the properties monitored when the acid was being isolated from plants and animal tissues (Waugh and King 1932, Svirbely and Szent-György 1933) and subsequently synthesized from simpler molecules (Ault et al. 1933). See Appendix 5.

As in the earlier cases of M. Berthelot, E. Fischer and others, polarimeters aided in the investigation of novel species of sugars and related biological compounds, and also when previously described sugars were discovered in new species of plants or animals (e.g. Wiley 1891, Forge and Hudson 1917), or synthesized (Bourquelot et al. 1913b, Helferich and Bredereck 1928). Polarimeters could also be applied to the determination of organic acids in fruit juices (Dunbar and Bacon 1911, Auerbach and Krüger 1923a,b). Attempts monitored by polarimetry around 1912 to produce glucose from cellulose have already been mentioned (section 27.4).

In agriculture, it is often important to know the composition of produce in terms of sugars, starch, cellulose, pentosans, nitrogenous substances, and so on. For the estimation of starch especially in food articles, several methods had been developed already before 1900. Some involved acid hydrolysis of samples followed by polarimetric measurements (O'Sullivan 1884, Guichard 1892, Stone 1894, Lintner 1907, Ewers 1908, Mannich and Lenz 1920, and others). Quoting Baumann and Grossfeld (1917): "Polarimetry provides the easiest and safest determination of starch, the most important and widely distributed carbohydrate from the vegetable kingdom in the nutrition of humans and animals." Improved versions of analytical methods described in the above papers are still in use (Mitchell 1990). See for instance the regulations of the European Union (1999) pertaining to measurements of the starch content in various types of animal feedstuffs.

Many scientists employed polarimeters in studies of practical value on the hydrolysis and the alcoholic fermentation of sugars, in continuation of those mentioned in section 27.6. These studies focused both on the selection of a right kind of agent (acid, yeast, enzyme etc.) to use for each purpose, and on the influence of various conditions upon the reactions, including concentrations of materials used, temperature, viscosity (Grumell 1911), and acidity (Fales and Morrell 1922). The presence of heavy metal ions, salts or other admixtures could also act to either catalyze or inhibit the fermentation. Among the chemists carrying out this work were H. Euler (for at least 15 years, e.g., Euler and Ugglas 1910, Euler and Laurin 1920, Euler and Myrbäck 1923) and R. Willstätter (Willstätter and Kuhn 1923), cf. Appendix 5, as well as J.H. Aberson, E. Schulze, F. Musculus, C. Neuberg, H. Colin (see Chaudun 1920), C.S. Hudson (1910a, etc.), O. Meyerhof (1914), and H.C. Sherman, along with numerous collaborators.

Polarimeters were also useful in investigations of the kinetics of sucrose hydrolysis by various enzymes such as invertase (Nelson and Vosburgh 1917), although mutarotation and other effects could make interpretation difficult. Kinetics furnish one of the key methods for unravelling the mechanisms by which the enzymes split the sucrose molecule into glucose and fructose. O'Sullivan and Tompson (1890), Michaelis and Menten (1913) and others had assumed that these mechanisms resembled simple inorganic reactions or the process of sucrose hydrolysis by acids. As indicated in section 27.6 however, the enzyme action turned out to involve intermediate steps, and much remained to be understood in this field as late as 1930 (Colin 1931). Other related studies focused on the breakdown of starch and other polysaccharides (Pringsheim 1923, 1924, see Fig. 35-1), and the fermentation of maltose (Willstätter et al. 1920), glucose (Hopkins 1928), lactose, etc. It may be further assumed that polarimetry played a part in the research on the metabolism of sugar in animals and its role in biological energetics, which was accelerating rapidly after 1930. Yet another application of polarimeters was in the improvement of methods for production and purification of the less common sugars such as raffinose (Hudson and Harding 1914), xylose, and fructose (Harding 1922), as well as rare ones including rhamnose (Walton 1921), galactose (Clark 1921), melibiose, melezitose, mannose and sorbose. Valuable uses for these and many other sugars were being found in medicine and in research on organic chemistry, biology, nutrition, etc. For instance, some strains of bacteria only ferment certain sugars, and can be identified in that way (Eitel 1920).

Following a chance discovery by Salkowski (1889) it was realized that yeast contained enzymes that could cause decomposition of the yeast cells themselves. This phenomenon came to be called autolysis. Optical activity probably played only a minor part in research on autolysis, which was eventually found to be of wide-ranging importance in the living world. However, polarimetry for instance aided in explaining the common appearance of some unpleasant liquids during fermentation in the brewing industry. They were collectively known as fusel oil, and remained for a long time a major culprit in the health problems caused by alcohol consumption. These compounds were in fact not derived from the sugars (or starch) that were being fermented, as people had believed. Rather, the amino acids present in the brewer‘s plant material and in the yeast were losing their NH_2-groups (Ehrlich 1907, Neubauer and Fromherz 1910-11, and others), resulting in the formation of various alcohols, aldehydes and organic acids. These findings greatly increased interest in both the scientific and the applied aspects of fermentation. Chemists soon isolated a number of enzymes (Harden and Zilva 1914), that catalysed steps in such processes.

Nicotine is one example of the alkaloids mentioned above by Walden (1925a). It was first synthesized by Pictet and Rotschy (1904) in both left-handed and right-handed versions; these turned out to have somewhat different biological effects. Natural nicotine has a strongly left-handed rotation, so polarimetry was one of the methods used in estimating the nicotine content of tobacco products (Popovici 1889, Tingle and Ferguson 1916, Abderhalden 1920, p. 33-34, 134-136). These assay methods were also applied to the huge quantities of nicotine-based insecticides used worldwide in agriculture during the early 20th century (Emery 1904).

Quinine is one of about 20 alkaloids present in the bark and root of cinchona trees and was the most commonly used anti-malaria drug. When Grimaux and Arnaud (1891) and Rabe and Kindler (1918) succeeded in converting certain related alkaloids into quinine, they depended in part on polarimetric measurements. Other notable contributions in this field around 1920 included synthesis of various cinchona alkaloids (Heidelberger and Jacobs 1919, etc.) and studies of their derivatives (Giemsa and Halberkann 1920). In fact the structure and interrelationships of the large class of alkaloids to which quinine belongs (Abderhalden 1920, p. 238-331) were to some extent resolved with the aid of polarimeters. Man-made quinine or other malaria remedies, however, did not become competitive in price with those from natural sources until decades later.

Similarly, L. Knorr and coworkers relied on measurements of optical activity in their series of more than 20 papers on relations between the isomers of morphine and of codeine (e.g. Knorr et al. 1907, see Fig. 29-9). Polarimetric and other observations on plant alkaloids named hyoscine (in 1880) and scopolamine (in 1890) showed them to be identical (Hesse 1896). Both names seem to be still in use for this drug, which has a wide range of medical (in fact also some criminal) applications. Measurements on the main alkaloids in seeds of various species of lupin verified that a poisonous alkaloid lupinidine was the same as sparteine which had been described previously (Willstätter and Marx 1904). Polarimetry played an important role in research on the structure and the synthesis of ephedrine (Schmidt 1918, Späth and Göhring 1920), used in various medicines as well as a somewhat controversial food supplement. The technique also aided in the synthesis of cocaine, the racemic form of which was obtained by Willstätter and Bode (1902). Separation of its two antipodes was found to be very difficult, so that the procedure for making the natural d-cocaine was published much later (Willstätter et al. 1923). H. Leuchs (1908, etc.) wrote with his collaborators at least 36 papers on the optically active poisons strychnine, brucine and related compounds.

It was mentioned in section 22.2 that two alkaloids had been found by Tanret (1879) in fungal growths known as ergot, on cereals. There turned out to be more of them present in these growths, depending on the type of cereal and the geographical location. The situation was complicated by the small concentrations of these alkaloids and in some cases by their chemical instability. By means of polarimetry and other techniques, Barger and Carr (1907) largely confirmed Tanret‘s conclusions, indicating however that his material had not been quite pure. The alkaloid ergotinine of very high optical activity turned out to have little physiological effect, while a very poisonous one which Barger and Carr named ergotoxine only showed moderate optical activity. H.H. Dale who collaborated with Barger in this research, went on to receive the Nobel prize in physiology or medicine in 1936 for related discoveries. In that year, Jacobs and Craig (1936) used polarimetric data in ascertaining the chemical structure of lysergic acid which is a common nucleus in all alkaloids from the ergot fungus. The drug LSD which is a derivative of lysergic acid, was first synthesized in 1938. By that time a dozen ergot alkaloids had been identified, including ergotamine which is used in the treatment of migraine.

Polarimeters have aided in the analysis of naturally occurring carbohydrate substances, mostly from the vegetable kingdom; examples were given in sections 22.2 (camphor, glycogen) and 27.4 (inulin). Such substances form a very wide range of slimes, gels, gums, resins (Köhler 1912), yeasts (Meigen and Spreng 1908, Schirmer 1912), and so-called hemicelluloses which may function as energy reserves, or as part of structural units of plants. These substances are often polymers of sugars (named appropriately xylans, arabans, dextrans, etc.) or of organic acids. Further examples include lichenins (in lichens), trehalum (produced by some insects), pectins (in many fruits and vegetables, Chevron and Droixhe 1890), galactans (in conifer wood, Schorger and Smith 1916), and mannans (in beans, nuts and nutshells). Reference works (Tollens 1898, Maquenne 1900, Lippmann 1904, Abderhalden 1911, p. 1-94) list hundreds of papers describing research with polarimeters on such natural polysaccharides and their hydrolysis products already by 1910. It may be assumed that knowledge of their composition has helped in finding new uses for them in foods, medicines, cosmetics, industrial materials and so on.

The work by O. Wallach on the terpene and camphor groups was mentioned in section 22.2. With his collaborators, he published over 150 papers and a book (e.g. Wallach 1904, 1908, 1910, 1914) on the structure and synthesis of these so-called alicyclic compounds between 1885 and 1918. Some are optically active, including terpineol which had a key role in establishing the correct molecular configuration of many other terpenes (Fig. 27-8). Research by Wallach and a number of other investigators gradually progressed from monoterpenes, to sesqui-, di- and triterpenes with basic structures of respectively 15, 20 and 30 carbon atoms. Among these terpenes and their derivatives such as alcohols, aldehydes, ketones, esters and phenols, is a great variety of components that are present in essential oils (eucalyptol, thujon, carvon, fenchon, citral, geraniol,....). Given knowledge of their configuration, they could be synthesized on a large scale and mixed in appropriate proportions to replace expensive natural products (Ellmer 1931). Other derivatives include many drugs, hormones, and poisons.

Sterols are another of the many classes of optically active natural materials. The first- and best-known of these is cholesterol ($C_{27}H_{46}O$) whose composition is the same in all animal organs e.g. in vertebrates, molluscs, arthropods, and worms. It is a constituent of cell walls, and a precursor to steroid hormones. Lindenmeyer (1863) measured the optical rotatory dispersion of cholesterol from gallstones, and found that its rotation value for yellow light was similar to that of cholesterol from peas where it had just been shown to occur. Another early study (Hesse 1878) however showed that a sterol in calabar beans was different from cholesterol. Many further publications described occurrences of both cholesterol and other sterols in constituents of plants (by Arnaud 1886 in carrots, Burian 1897 in cereal seeds, Lippmann 1899 in sugar beets, Windaus and Hauth 1907 in linseed oil, Klobb and Bloch 1907 in the soybean plant, etc.) and in animals (Schulze 1879, iso-cholesterol; Bondzynski and Humnicki 1896-97, coprosterol). Polarimetry (and to some extent observations in polarizing microscopes) was quite helpful in these discoveries, as well as in the purification and characterization of sterols and their derivatives in the decades around 1900. See e.g. Mauthner (1906), Diels and Linn (1908) and a review by Dorée (1909). Polarimeters continued into the 1920s to aid in studies of the molecular structure of sterols and their relationships (Windaus 1916, Windaus and Rahlén 1918, Anderson and Moore 1923), and in research on further members of this class such as zymosterol (Smedley-Maclean 1928, Wieland and Asano 1929).

A new sterol was isolated by Tanret (1890, 1908) from the fungal growths (ergot, see section 22.2, and above) which commonly appear on rye. This compound, named by him ergostérine (now ergosterol), was soon found also in other fungi and in yeast. In the early 1920s it was noted that Vitamin D which protects children against the bone-softening disease called rickets, could be produced from various fatty substances by irradiation with ultraviolet light. This discovery sparked extensive research where polarimeters again were involved (see e.g. Bills and Honeywell 1928). For a while it was thought that the ultraviolet rays were transforming cholesterol into Vitamin D. However, it was eventually found that the source of one kind of the vitamin (called D_2 or ergocalciferol) was Tanret‘s ergosterol which tends to occur in cholesterol as a tiny impurity. Fig. 29-9 shows that the gradual conversion of ergosterol can be followed by monitoring the optical activity of a sample during its irradiation (Windaus and Linsert 1928). Ultraviolet light also transforms a related compound from animal tissues into another kind of Vitamin D (D_3 or chole-calciferol).

Research in human biochemistry, clinical medicine, and pathology often made use of polarimeters (Lecher 1917); some of those on the market were spectro-polarimeters (Fig. 29-4 top, Fig. 29-13, Twyman 1906). Glycogen (e.g. Pflüger 1906), glucuronic acid, maltose (Blake 1916), lactose (e.g., Wiley and Ewell 1896, Pellin 1899), alkaloids (Ratz 1905, Annett and Bose 1923), pentoses in urine (Zerner and Waltuch 1914), bile acids and pigments (Vahlen 1895-96, H. Fischer 1911, Wieland and Sorge 1916, Wieland and Weyland 1920, see Appendix 5), and albumins (Schütz and Huppert 1900, Young 1922) were among the substances investigated. A complex material called “protagon” was since 1865 reported to occur in various animal organs, especially brain tissue. After a long period of controversy it was conclusively shown around 1910 by polarimetry, polarized microscopy and other methods, that protagon was merely a heterogeneous mixture of lipids (Rosenheim and Tebb 1908).

Black (1908; Benedict and Joslin 1910) described a new polarimetric method to estimate the amount of oxybutyric acid in diabetic urine. The use of polarimeters in research related to diabetes continued to at least 1930 (Underhill and Fine 1911, Kuriyama 1916, Eadie 1923, Lundsgaard and Holbøll 1924, Paul 1925, Struers 1925, Wierczuchowski 1926, Moelwyn-Hughes 1930). This included observations on the effects of insulin after it was discovered in 1921-22. Knowledge of the constitution of sugars and their derivatives was also important in research on the physiological effects of insulin (Herring et al. 1924). Thus, it was suggested that some of the glucose in blood might be in a very reactive state, cf. the γ-glucose mentioned in section 27.7 (e.g., Creveld 1923, Winter and Smith 1923). The existence of this form of glucose seems to be still a possibility, but unproven.

A peculiar story concerns certain hypotheses and experimental results of E. Abderhalden, who was well known from other achievements and was even nominated for Nobel prizes more than once. From around 1909 he claimed (e.g., Abderhalden 1913) that human and animal bodies respond to events like infections, cancer and pregnancy by forming “defence enzymes” (Abwehrfermente). This was for a while considered a remarkable discovery. The activity of these enzymes in blood was supposed to be measurable with polarimeters and other methods, and a pregnancy test based on it (Abderhalden and Kiutsi 1912) was in some use for at least 20 years. However, the test turned out to be very difficult to perform and interpret, and others demonstrated already in 1914-16 (see Nature 393, p. 109-111, 1998) that the defence-enzyme hypothesis had no foundation at all. Another suggestion by Abderhalden may have been more reasonable, namely to estimate the total amount of blood in a living animal by injecting a known quantity of an inert compound with strong optical activity into an artery, and then measuring its concentration when it had mixed uniformily with the blood (Abderhalden and Schmid 1910). Analogous methods for finding the amount of fluids or their rates of flow, based e.g. on the use of dyes or isotope tracers, later became common in many situations.

Glycols are alcohols containing two OH-groups; research on optically active glycols began around 1910 (McKenzie and Wren 1910, Wallach 1910, McKenzie and Martin 1913, Neuberg and Kerb 1918, Abderhalden and Eichwald 1918). They have later found many industrial applications. The glycerol (glycerine) molecule which has three C-atoms with one OH-group each, is symmetrical and therefore inactive. Various related substances however have mirror-image symmetry, notably the triose sugar glyceraldehyde. This compound is of historical interest in stereochemistry, having been chosen as the basis for the D- and L- designation of chiral compounds (Wohl and Freudenberg 1923). Glyceraldehyde and its 3-phosphate are also important in glucose metabolism.

As regards plant metabolism, various extensive studies were carried out on the genesis and storage of sugar in plants, the sugar beet and vine being of particular interest. Polarimeters were probably involved in some such studies, but papers about these largely appeared in journals and reports which I have not had the opportunity to consult. The concentrations of sucrose, other sugar compounds (some new) and starch as well as their changes with time and conditions, were investigated in a great many other plants (Brown and Morris 1893, Schulze and Frankfurt 1895, Bourquelot and Hérissey 1902, Bertrand 1898, 1904 on sorbose, Bourquelot 1907a, Parkin 1912, Gast 1917) and in seaweeds (Kylin 1915, Clark 1922).

After 1900 various studies on how organisms utilize the energy content of glucose were also initiated, and for instance A. Harden and W.J. Young showed in 1908 that phosphate played an important part here. Like E. Buchner (mentioned in section 27.6) and many others investigating fermentation, they mostly made use of volumetric measurements of the carbon dioxide evolved in their experiments. However, polarimeters were applied to some extent in research on organic phosphate compounds by Harden and Young‘s group (e.g. Young 1909, Harden and Young 1913, Robison 1922, see Appendix 5) and by scientists elsewhere (Neuberg et al. 1917).

Gamgee and Hill (1903), Osborne (1903) and Gamgee and Jones (1903, 1904) measured hemoglobin and some nucleoproteins with a polarimeter, remarking that such measurements had not been carried out previously on these important compounds. Among other things they found strong optical activity in nucleic acid material from cells of the thymus gland, and Jones (1908) used polarimetric data to confirm that the same nucleic acid was present in other organs. At the beginning of his paper, Jones states that "A study of the nucleic acids is …one of the most puzzling tasks that confront the student of physiological chemistry and…the literature on the subject reveals a mass of contradictions, corrections and inconsistencies which it would seem almost impossible to reduce to any satisfactory scientific order.".

Neuberg (1902) studied in pancreatic tissue a pentose sugar which A. Kossel had found in 1893 (section 27.4) to be a constituent of nucleic acids. Neuberg concluded that it was xylose, and Wohlgemuth (1902-03) found a sugar with the same optical activity in liver tissue. Two other pentoses were proposed in this context, namely lyxose (Haiser and Wenzel 1909) and arabinose. After having reached some confusing results about the matter, Levene and Jacobs (1909) managed with the aid of polarimetric measurements to eliminate all three from consideration. That left d-ribose as the only possibility; this sugar was unknown in nature but Fischer and Piloty (1891) had produced l-ribose by chemical treatment of arabinose. Levene and Jacobs also noted that both the melting point and the optical rotation of the nucleic-acid sugar agreed with the properties of d-ribose recently synthesized by A. van Ekenstein. Their inference was later amply confirmed; one type of nucleic acids, RNA, is in fact named after ribose. In the nucleic acids called DNA, a hydrogen atom has replaced an OH-group in one of the C-atoms of the ribose; see for instance Levene and London (1929) and Levene et al. (1930) who substantiated this by measurements of optical activity and other properties. Adenosine triphosphate (ATP) which has a key role in the energy conversion in cells, also contains a ribose.

Optical activity measurements also promoted realization of the fact that quite similar nucleic acids were widespread in the living world (e.g. Schulze and Trier 1910-11). Pighini (1910-11), Amberg and Jones (1911), Levene and Medigreceanu (1911) and Tschernorutzky (1912) studied the enzymatic decomposition of plant and animal nucleic acids under varying conditions. Levene (1920, etc.) and others investigated the activity of various structural units (nucleotides) in these acids, and of their derivatives. In addition to the work of E. Fischer covered in section 27.4, these and other polarimetric measurements (section 22.3) undoubtedly aided in unravelling some of the main characteristics and functions of the nucleic acids which are now well known. P.A. Levene and his collaborators were particularly productive and influential in this field; unfortunately he proposed in 1910 an incorrect but long-lived model of the structure of DNA that did not allow it to carry genetic information. In the 1930s and later (cf. section 36.8), polarized light was used in other research on nucleic acids, for instance in studies on molecular scattering (cf. section 27.1) and on the Maxwell effect (cf. section 27.3).

The rapid development of stereochemistry in the 1920s is described in books like those of Wittig (1930), Freudenberg (1933) and Lowry (1935). In connection with Lowry himself, one may here recall that he proposed in 1923 an important extension of the acid-base concept of physical chemistry. According to the Dictionary of National Biography (supplement volume for 1931-40) this may be traced to his research on the optical activity of organic compounds. J.N. Brönsted who independently made a similar proposal at the same time, also investigated optical activity, but I have not checked where his ideas on the acid-base topic originated.

29.3 Reflected-light microscopy, c. 1900-20

The early history of this field has been described by Orcel (1972). As is well known, many useful metals such as iron, lead, copper and zinc are present in the earth's crust in the form of oxides, sulfides etc. rather than pure elements. The grains of these "ore minerals" are generally semiconductors and therefore opaque in thin section. Several of their properties aided geologists in distinguishing them in hand samples or under the microscope: density, hardness, color, magnetism, effects of acids, and so on. Chemical analyses were time-consuming, and it might be difficult to isolate fine-grained ores from their silicate matrix. Additional rapid and dependable analyzing methods were therefore needed, especially in prospecting, mapping of mineral bodies, and mining operations. The first attempts to employ light reflected from polished surfaces in microscopic studies of ore minerals were possibly made by H. Baumhauer around 1885. Drude (e.g. 1887) and Voigt (1891) published theoretical papers dealing with the reflection, refraction and propagation of polarized light in absorbing crystals. Similar studies on metals and alloys followed (Drude 1890), cf. a note in La Nature 26(I), 139-140, 1898. Charpy (1896) introduced various techniques for this purpose, and they were advanced further by W. Campbell around 1907 (Orcel 1972).

The state of polarization of light reflected normally from a polished ore-mineral surface depends on the mineral, also varying with the angle of the surface relative to crystal axes if the crystal is anisotropic, and with the wavelength. This can be utilized in two ways, as in transmitted-light microscopes. On one hand a polished rock section containing different ore minerals may be viewed

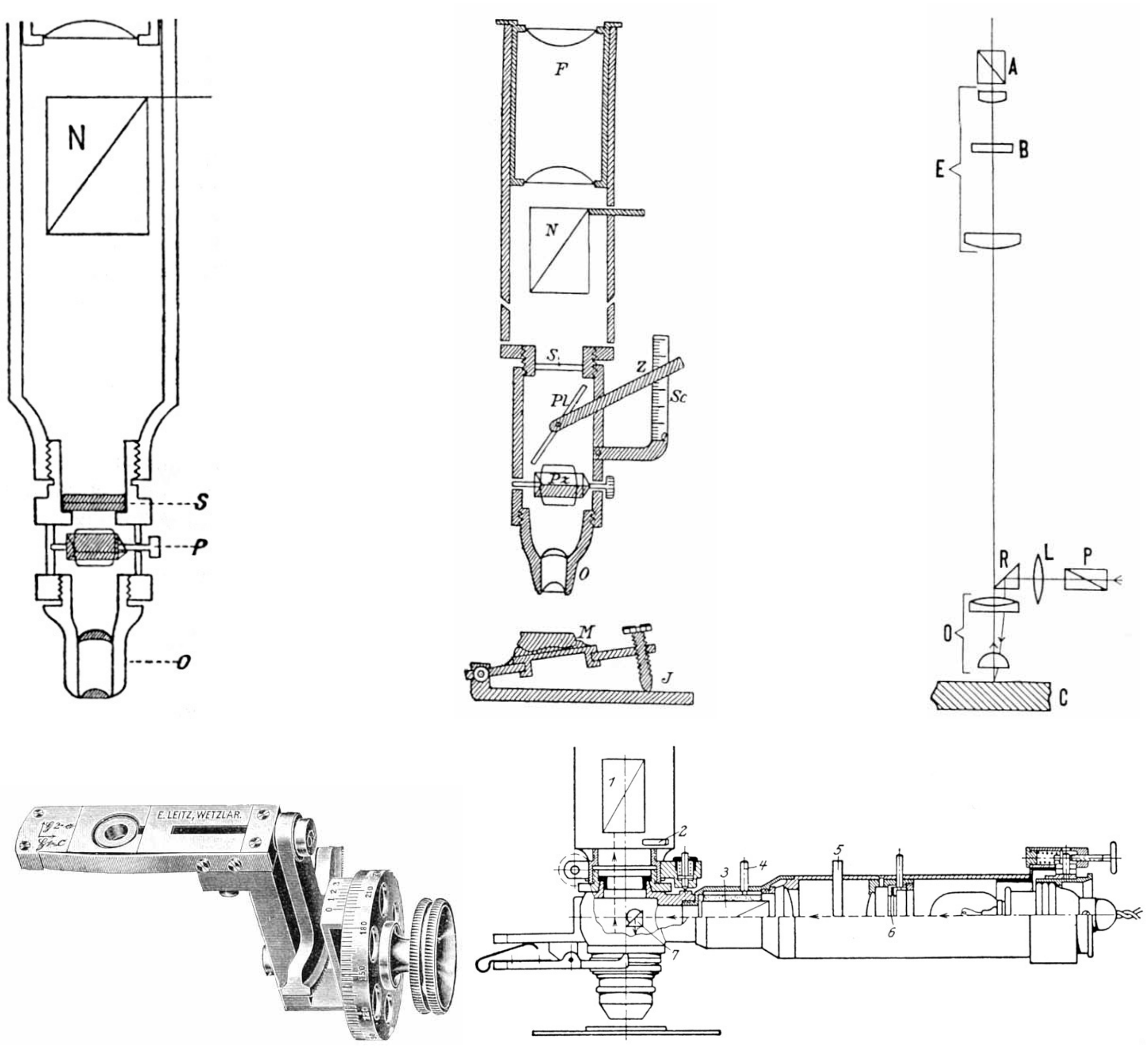

Figure 29-10. Development of reflected-light techniques in microscopy, for studying ore minerals (and later, metals). *Top left and center*: Schematic diagrams of microscopes made by Königsberger (1901a, 1908). N is a Nicol prism, and S is a Savart-plate compensator from Iceland spar. The 90° glass prism P reflects light to the specimen M. *Right:* In the later design of Wright (1919b), a bi-quartz wedge B invented by him has replaced the Savart plate. *Bottom left:* Berek's (1913b) compensator for measuring the phase angle of elliptically polarized light in microscopes (from Rosenbusch 1924). The wheel makes a 0.1 mm thick Iceland spar plate rotate in the round hole. *Right:* Illumination arrangement for reflected-light microscopy, from the workshop of C. Reichert. Nos. 1 and 3 are Nicol prisms. A specimen with a highly polished surface is on the plate below the microscope objective.

through Nicol prisms (and usually other accessories) to discern variations in brightness and color between grains. For instance, in igneous rocks magnetite (Fe_3O_4) and ilmenite ($FeTiO_3$) often occur side by side or even as intergrowths, and in polarized light they are easier to distinguish than in ordinary light because magnetite is cubic while ilmenite is trigonal and therefore anisotropic. Short's (1931) handbook on the microscopic determination of ore minerals where the various methods of identification are described, stresses that "The most useful test that can be applied to determine an unknown mineral is the test for anisotropism.". One the other hand, measurements on the intensity and polarization of the light reflected from individual grains may be employed for quantitative estimates of their composition.

A major step forward in this field was taken with J. Königsberger's (1901a, 1908) microscope designs (Fig. 29-10). In his first model, the light incident on a polished specimen was unpolarized, and a Nicol prism, a tilted glass plate and a Savart plate (section 13.5) were used for analyzing the reflected light. In later models by him (Königsberger 1909, cf. Schlossmacher 1924) and other designers, the incident light was first made linearly polarized by a Nicol prism, and the rotation of its plane of polarization upon reflection was measured with another Nicol prism and a quartz plate (Fig. 29-10). Königsberger points out in his papers that for instance the quality of coal may be estimated from the anisotropic reflectivity of polished samples; this technique was later used extensively.

In papers in 1908-10, Königsberger quotes some cases where useful information on metallic specimens may be obtained by microscope examination in reflected light; additional examples are given by Endell and Hanemann (1913). The book on microscopy by Spitta (1907, p. 291-301) contains descriptions and illustrations of microscopes for metallurgical use from four manufacturers. However, neither he nor Johannsen (1914) mentions any polarizing arrangements for these. After World War I, ore microscopes developed rapidly. F.E. Wright replaced Königsberger's quartz plate with an Iceland spar rhomb (see figure in Kristjánsson 2000), later introducing a new type of quartz wedge (Wright 1908a, 1919b, B in Fig. 29-10). Techniques for varying the illumination of the specimens by means of Nicol prisms were also introduced (Fig. 29-10). More information on this topic will be presented in section 39.1.

29.4 Photometers based on Iceland spar prisms, 1870-1930

Photometers have for a long time been used widely in research and industry to measure the amount of light that materials or objects emit, reflect, absorb etc. They have also been used to investigate how we perceive light. As mentioned in section 18.4, measurement of light intensity were (until the early 20th century) made by comparison of a light source of "unknown" intensity with a "known" or standard source. Both of these sources were made to illuminate comparable areas within the observer's field of view, and he then attenuated one of them in a measureable way until they appeared equal. The five main methods of attenuation were i) moving one source away by a known distance ii) interposing a calibrated wedge of smoke-colored glass iii) varying the size of apertures iv) cutting a light beam off intermittently with a rapidly rotating sectored disc, and v) interposing Iceland spar rhombs, Nicol prisms and/or Wollaston prisms at variable angles and using Malus' cosine law to calculate the resulting attenuation. In scientific journals from the period 1860-1940, a great many examples are encountered where such polarizers are being employed directly for measuring light intensities, for calibrating other photometers or light filters, or for checking the stability of light sources.

Möller (1885a,b) who improved Wild's (1863) photometer, claims that "…it is known that only polarization photometers are suitable for precise photometric studies". Pellin (1899) advertises a photometer of E. Becquerel's design from the 1860's. Martens (1900a, 1903, Fig. 29-12 top) describes two new photometers (one being easily portable) for white light containing an Iceland spar Wollaston prism and a Nicol prism. The firm of Schmidt & Haensch where Martens was working, manufactured these and other polarization photometers for at least 60 years, see e.g. Glan (1877) and section 39.1.

Godard (1886), Grosse (1887, Fig. 29-11), Weber (1891, Fig. 29-11), Salomons (1893), Königsberger (1901b, Fig. 29-12) and Nutting (1903a, Fig. 29-15) also designed polarization photometers. Grosse's instrument is advertised in a catalog from A. Krüss' workshop in Hamburg in 1899, along with some types of spectrophotometers. Weber's photometer, as well as an earlier version

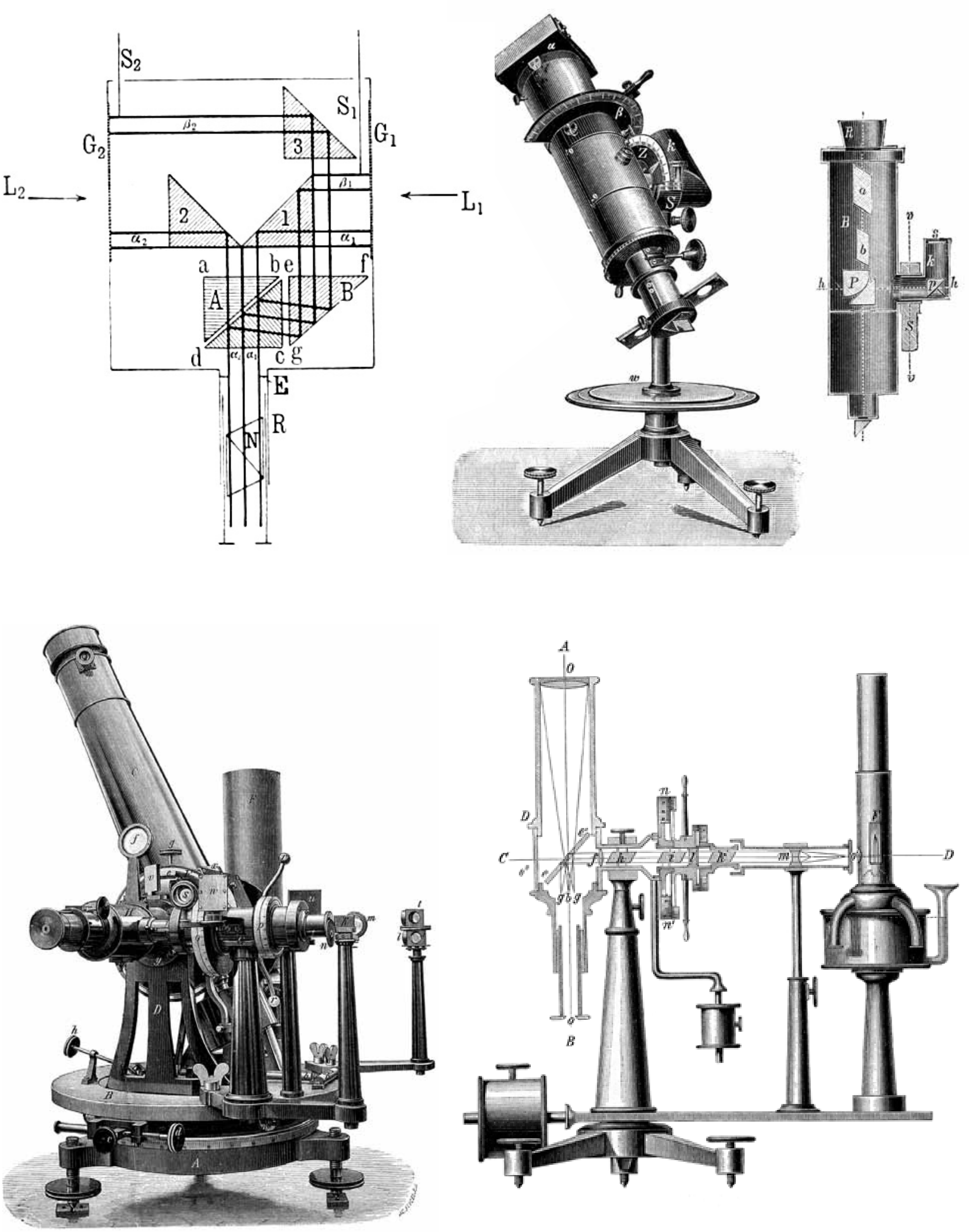

Figure 29-11. Photometers with Nicol prisms. *Top left:* The "mixing photometer" of Grosse (1887) which compares the intensities of light falling on the matt glass plates G_1 and G_2. In addition to the Nicol prism N, the instrument contains a Dove (1864) prism of Iceland spar. From Liebenthal (1907). *Right:* Weber's (1891) photometer, from Busch and Jensen (1910) who used it for observations of sky light. *Bottom:* Zöllner's (1861, and later) photometer mounted in an astronomical telescope in Potsdam. A cross-section is shown on the right; an observer at B attenuates the light from a standard lamp in the chimney with Nicol prisms, until it appears equal in brightness to a star in the telescope. The third Nicol prism and a quartz plate could be used in estimating (or compensating for) the different colors of the stars being observed. From Newcomb-Engelmann (1921, originally in Müller 1891).

without Nicol prisms, was produced commercially by Schmidt & Haensch. It could also provide an estimate of the state of polarization of the light. This was used by Pochettino (1905) when observing luminescence in crystals, and by Busch and Jensen (1911) who with their co-workers investigated the light from the sky (Fig. 29-11, and section 27.1). Blondel (1920) introduced new photometers with Nicol prisms, intended for studies of the absorption of light in gases and liquids. The manufacturers Jobin and Yvon (1923, 1924) patented novel designs of such photometers. Wright (1919a) says that polarization photometers are "widely used and are sensitive and reliable".

One version of the Martens photometer (see Boas 1899, Callier 1909) was dedicated to measurements of the darkening of areas of photographic plates (Fig. 29-11). It was used, for instance, in fundamental work in that field at manufacturers‘ research laboratories (Hitchins 1917 at Ansco, Wightman et al. 1923 at Eastman Kodak). Another instrument developed for this purpose was a photometer with Nicol prisms and a split 60° glass prism (Wallace 1907), based on an older instrument by D.B. Brace. If an empirical calibration formula for the darkening as a function of light intensity, exposure time etc. was available (see the final paragraph of section 29.5), the darkening could be used in estimating the intensity of very faint light, such as from individual stars. The Martens instrument was similarly applied to X-ray photographs (Glocker and Traub 1921). Danjon (1926) constructed a small photometer of the type originated by Wild (1863), in order to measure darkening of photographic films and to calibrate glass absorption wedges. Santon (1928) made further modifications to this type of photometer, as Wild (1883, 1888, 1890) himself had also done much earlier (Fig. 29-14). In case of fine details (especially spectral lines) in photographs, different photometer types were preferred.

Cleary (1914) recommends the Martens photometer for testing the light transmission of optical systems. It was also preferred by Karrer (1922) and other researchers at the U.S. Bureau of Standards in various studies on for instance illumination and light filters. Kieser (1919) adapted a Martens-type meter for the measurement of gloss on photographic paper (Fig. 29-17). Other specially designed apparatus with Nicol prisms was also intended to measure the reflection characteristics of surfaces of paper, paint, enamel etc. (Glanzmesser, glarimeter; Ingersoll 1914, 1921, Boffey and Derrett-Smith 1931). Some such instruments were produced commercially and used in industry.

In so-called "flicker photometers" which were introduced in the 1890s, the light beams from the two sources to be compared were made to alternate between the two adjacent spots (or the same spot) in the observer's field of view many times per second. One version of these meters contained a Nicol prism which rotated at constant rate in front of a Rochon- or Wollaston prism (Maisel 1908, Ives 1917).

The polarization photometers for white light do not seem to have been much used in fundamental research on thermal radiation. However, Möller (1885a) made photometric measurements with an instrument of the Wild type which confirmed Lambert's emission law. According to this law, the intensity of the light emitted in a particular direction is proportional to the cosine of the angle from the normal to the emitting surface. Arago‘s early work on the polarization of light emitted obliquely from surfaces (section 17.3) was resumed e.g. by Violle (1887) and Millikan (1895) who both used Cornu‘s (1882) photopolarimeter. Wood (1906) and Millikan also carried out similar studies on fluorescence light. Uljanin (1897) measured the polarization of oblique infrared radiation from glass and metals. Later, Laue and Martens (1907) made analogous experiments on hot platinum, with Martens' polarization photometer. They computed the optical properties of the metal from the state of polarization of the emitted light, and criticized some of the procedures of Möller and other previous investigators.

As mentioned at the end of section 18.4, a simple setup with two Nicol prisms in tandem was

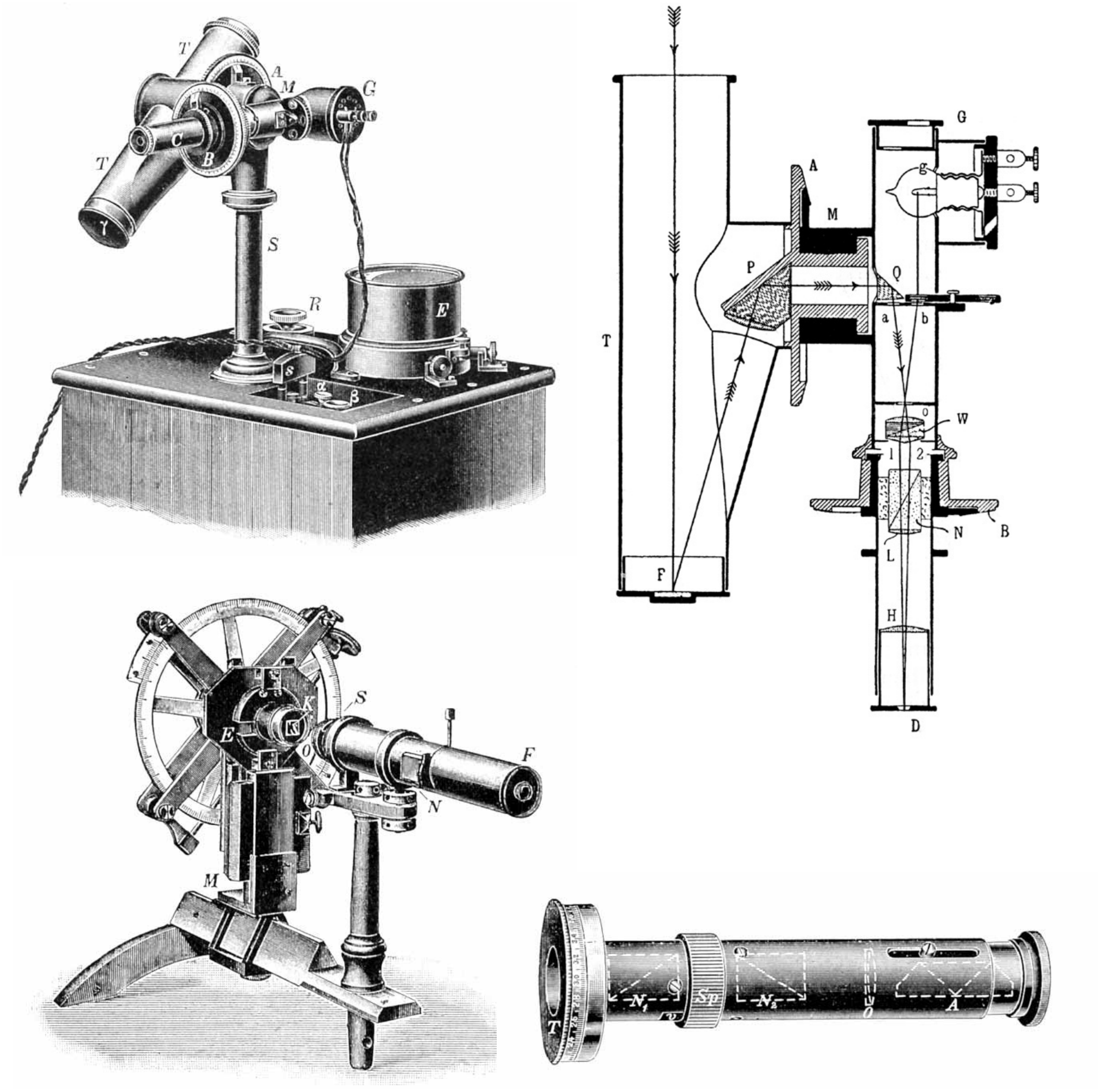

Figure 29-12. Photometers. *Top left:* Martens' (1900a) popular photometer for white light. *Right:* A cross-section of this device. The light to be measured enters the telescope T and is reflected from the matt-glass plate F through the hole a. An observer at D also sees the adjacent hole b, which is illuminated by the standard incandescent bulb g through another matt-glass plate. W is a calcite Wollaston prism. From Liebenthal (1907). *Bottom left:* Königsberger's (1901b) microphotometer for measuring light from very small areas. It contains a Nicol prism, a calcite rhomb and a Savart-plate of quartz, mounted within a horizontal microscope. From Duparc and Pearce (1907). *Right:* A handy spectrophotometer from Fuess (c. 1910), based on an idea from Nutting (1906).

often used when people desired to dim a light by a known amount during experimental work. One such case is the comparisons by Crova and Lagarde (1881) between light from the sun and from a standard lamp. J. Fröhlich who continued studies by G.G. Stokes on the polarization of diffracted light (see section 17.1), also measured the intensity of that light by means of Nicol prisms (Fröhlich 1878, 1882). Wood (1905a, p. 175) similarly studied the properties of diffraction gratings by comparing the intensities of light received directly from a sodium source and light from that source deflected by the grating. It may be recalled in this context that the use of diffraction gratings in spectral analysis increased much after c. 1882, but the first generations of gratings tended to give rise to spurious extra spectral lines, called ghosts. According to later literature, Wood contributed to the banishing of these ghosts by improvements in grating production. Küch and Retschinsky (1906, 1907) used a pair of Nicol prisms when measuring the light intensity from a new type of mercury lamp, and so did Kester (1899) and Lépine (1915) in investigations of luminescence (Fig. 36-5). Merton and Nicholson (1918) and Fabry and Buisson (1921) attenuated their light sources in the same way when calibrating the sensitivity of photographic plates in their research on spectra. Dietrich (1881), Brotherus (1912), Voss (1918), Gerlach and Brezina (1924) and others utilized Nicol prisms when measuring the ratio of intensities of adjacent spectral lines from hot metal vapors. Gerlach later wrote widely-read books on chemical analysis of metals by spectroscopy of light emitted from high-tension discharges. His methods were in part based on such intensity comparisons, made in most cases with non-polarizing types of photometric equipment.

Polarization photometers were no doubt applied to some extent in measurements of light intensity from street lamps, of illumination in schools and workplaces, of reflection from walls, and so on. See Struers‘ (1925, p. 335-339) catalog entries on the Weber meter and others. Accounts of such practical studies may however mostly have appeared in hard-to-find industrial journals and bulletins. One of the pioneers in illumination research (Priest 1913) described a special photometer for this purpose, with three Nicol prisms instead of the usual two.

29.5 Spectrophotometers and related equipment with Nicol prisms, 1870-1930

Two different types of photometers may be used when light intensity is only being measured in a limited (perhaps variable) range of the visible spectrum. One of their most important roles was in analytical work in chemistry, biochemistry and medicine. The light might be given off by a substance in a flame or an electric spark, or it might be absorbed (especially in an aqueous solution). In the latter case, the interpretation of the measurements is based on Beer’s law which was introduced in section 18.4 above and which had been verified satisfactorily around 1870 (Krüss and Krüss 1909, p. 101-106). The less expensive photometer type is called colorimeters, measuring light in a rather wide (and often fixed) band of wavelengths. They are convenient to use in routine work on solutions where a single colored compound is present in much greater concentration than others. In a colorimeter, one of two beams from a lamp traverses an unknown solution, while the other one is sent through a standard solution (or a colored glass rod). The observer makes adjustments in the path lengths or the relative intensities of the incident beams, until both the emerging beams appear equal. In the more expensive type, spectrophotometers, comparisons are made between two light sources. A narrow wavelength interval to be used is selected by means of a prism or a grating. The observer may even scan the whole visible spectrum in this way. The method may be used in estimating the concentration of one compound in a complex mixture, if it is the only one that emits or absorbs light in a particular wavelength range. Iceland spar prisms were used for light attenuation in some models of both these photometers.

Beginning with colorimeters, it appears from e.g. Journal of Biological Chemistry 1905-25 and general catalogs like Struers (1925) that only a small fraction of these instruments were based on polarization techniques. The first one that has come to my attention was offered by Pellin (1889, p. 149, 1899, 1913). Krüss (1892) who designed a colorimeter containing a Nicol prism, two Iceland spar rhombs and a quartz plate, claims that it is “very superior” to other colorimeters. Krüss and Krüss (1909, Fig. 29-16) present examples of measurements of the concentration of metal salts

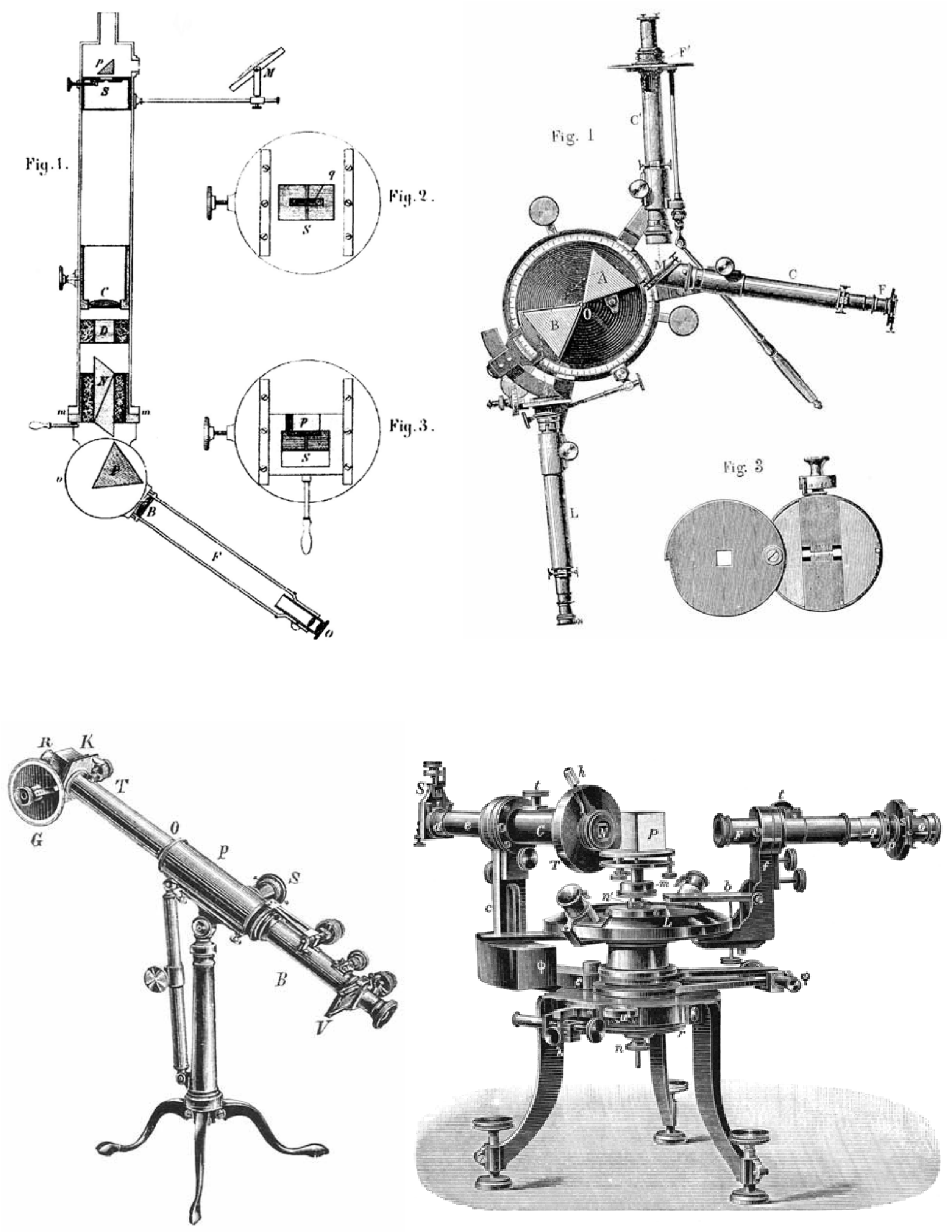

Figure 29-13. Spectrophotometers from around 1880, all incorporating Nicol prisms. *Top left:* The instrument of Vogel (1877) intended for solar observations. *Right:* The photometer of Gouy (1879) for research on colored flames. *Bottom left:* Crova's (1883) meter for analysis of aqueous solutions by absorption (Krüss and Krüss 1909). The last two, as well as the photometers of Govi, Violle and Melander, were produced commercially by Ph. Pellin. *Right:* Glan's (1877, and later) instrument, here installed in one arm of a spectrometer (Liebisch 1891) to study e.g. light absorption in crystals.

in aqueous solution to an accuracy better than 1%. They point out that it may be useful in quality control of drinking water and beer, industrial dyes, and even steel. The Krüss colorimeters were produced by a family firm of the same name which was mentioned in the previous section; it is still in business in similar fields. Meisling (1904, Fig. 29-16) designed a model intended for measurements of hemoglobin in blood (Oerum 1904, 1906). Colorimetric measurements on blood and other fluids often tended to be much simpler and faster than spectrophotometric measurements (cf. paper by W.C. Stadie in J. Biol. Chem. 41, 1920).

The concept of a spectrophotometer was suggested by Govi (1860a), but K. Vierordt was the first to demonstrate a working instrument a decade later. Soon after, Nicol prisms were incorporated in such apparatus. Encyclopaedia Britannica (11th ed., 1910-11, entry on Photometry), Weigert (1927), Walsh (1958) and other sources refer to polarization spectrophotometers by for instance H. Trannin (1876, 1878), P. Glan (1877, 1878, Fig. 29-13), W.v. Zahn (1878), A. Crova (1880, 1883, Fig. 29-13), G. Hüfner (1877, 1889, Fig. 29-15), improved by Houstoun (1908) with a pentagonal Iceland spar prism, A. König (1894, invented in 1885), G. Melander (1897, advertised by Pellin 1899), J. Königsberger (1903), J.R. Milne (1904), P.G. Nutting (1911, etc., see Fig. 29-12 and 29-15), and H.B. Lemon (1914, Fig. 39-4). However, the sources just mentioned also point out some problems with the operation of this general type of photometers and spectrophotometers. I have not investigated when large-scale application of spectrophotometers in routine analytical work in chemistry or biochemistry began. Hüfner (1877), Glan (1878), Glazebrook (1883b) and Crova (1883) discuss this possibility when describing their polarization instruments, referring also to previously published papers and to Beer‘s law.

The König meter was used e.g. by Wiedeburg (1890) for studying diffusion in liquids, and by Köttgen and Abelsdorff (1895) in research on pigments in vertebrates‘ eyes, but it was soon superseded by the König-Martens polarization spectrophotometer (Fig. 29-15). This very successful device was an improvement by Martens and Grünbaum (1903) upon König‘s instrument, with among other things an Iceland spar Wollaston prism replacing a quartz Rochon prism. The König-Martens meters did much service in the research on scattered light which was introduced in section 27.1 (see e.g. Aufsess 1904, Steubing 1908, Fürth 1915, Stamm and Svedberg 1925) and which will be dealt with further in section 36.7. They were also useful in measurements of light absorption by for instance dissolved salts (Grünbaum 1903, Müller 1906). In 1910 these meters as produced by Schmidt & Haensch were said (vol. 1 of the Handbuch der Biochemischen Arbeitsmethoden, p. 642) to be the best spectrophotometers for absorption measurements. Other typical uses relate to observations of the concentration of chlorophyll in plant tissues (Malarski and Marchlewski 1910), chemical equilibria in solutions (Hildebrand 1908), light emission from hot metal surfaces (Stubbs and Prideaux 1912), and the identification of phenols (Gsell 1916). Stuchtey and Wegener (1911) measured the albedo of the Earth and of clouds in six balloon ascents, using a specially constructed König-Martens instrument.

The Hüfner spectrophotometer was employed in a similarly wide range of projects, including observations of diffusive mixing of fluids (Wroblewski 1881), light transmission by water (Hüfner and Albrecht 1891), acid-base reactions (Lellmann and Gross 1890), light absorption by aqueous solutions of metal salts (Magnanini and Bentivoglio 1893), and emission spectra of lamps (Leder 1907). The Hüfner meter, with improvements by Twyman (1906) was produced for a decade or so by the firm of A. Hilger. After 1918 however, Hilger instead began selling a Nutting polarization photometer attachment for their own quartz-prism spectroscope. This equipment also found many applications (Getman 1922, French and Lowry 1924, both studying dissolved copper salts), and it was even in occasional use into the 1940s in spite of increasing competition from non-polarizing spectrophotometers after 1920 (section 39.1).

Ketteler (1881) and Pulfrich (1881; Ketteler and Pulfrich 1882) employed a Glan spectropho-

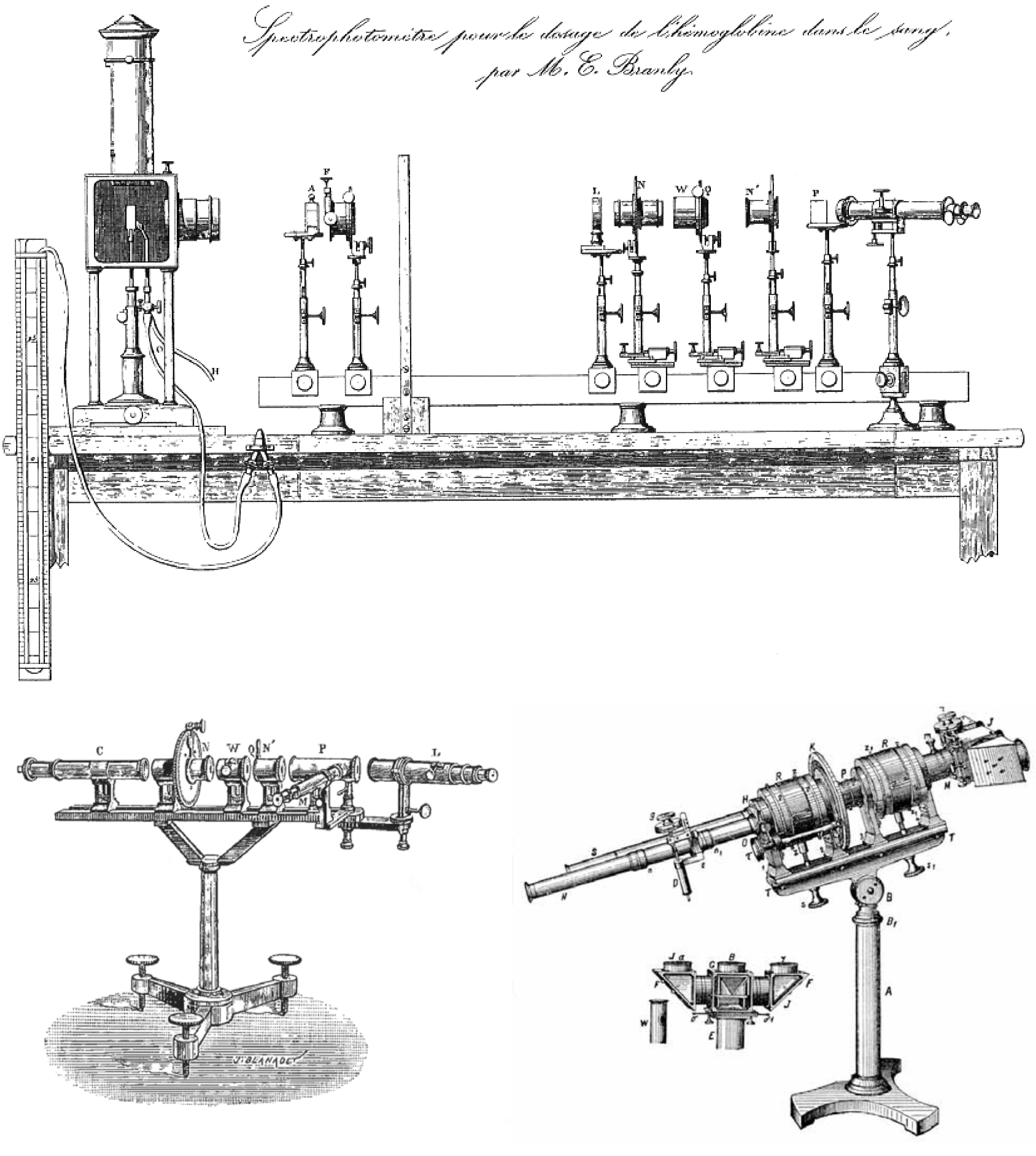

Figure 29-14. More spectrophotometers. *Top:* The equipment used by Branly (1882) in his work on hemoglobin. *Bottom left:* Violle's (1884) meter, employed in research on incandescent surfaces. *Right:* Wild's (1883) instrument (Krüss and Krüss 1909).

tometer for testing of theories on the relation between refractive indices and absorption in colored materials. It may also be noted here that Ketteler had used Mascart's (1864) measurements of the dispersion of the ordinary ray in Iceland spar, when formulating these theories. Similar studies on organic dyes were made by Plaats (1915). Zsigmondy (1901) at the famous O. Schott glass-works measured light absorption in glasses colored by admixtures of metal salts; he states that knowledge in that field is "of the greatest importance for the glass industry". The Glan meter (improved by H.C. Vogel, see section 29.6) was also used in measurements of light absorption in optical glass (see Hovestadt 1900, p. 47-52) and in the atmosphere at Tenerife (Müller 1912); the latter results agreed well with theoretical derivations.

Spectrophotometers with Nicol prisms were used in distinguishing between coloring agents e.g. in paints (Pitcher 1888) or food (Gibson et al. 1922), in raw materials of the sugar industry (Hinton 1930) and in industrial goods (Nichols 1884, Holmes 1923), in measuring the light intensity from gas lamps (Wild 1888, Köttgen 1894) and other lighting (Vogel 1877, Nichols and Franklin 1889) for streets and factories, studying diffuse reflection from soot (Stark 1897), powders (Wright 1900), painted walls (Nutting 1912) and other matt surfaces for practical purposes (Chwolson 1886, Messerschmitt 1888, Dimmer 1908, Návrat 1912, Woronkoff and Pokrowski 1923). They also aided in investigations of fluorescence in solids (Wiedemann 1889) and solutions (Knoblauch 1895), of dichroism in minerals (Ramsay 1888), of luminescence and color effects caused by radioactivity or other agents (Hauer and Kowalski 1914, Fig. 29-15, Belar 1923, Wawilow 1925, Smith 1926), and of light absorption in various types of glass and in dye solutions (Königsberger 1901c, Houstoun 1906, Königsberger and Kilchling 1909, Wright 1921). As regards organic dyes such as the indicators used in pH measurements, various scientists looked for correlations between their molecular structure, surface colors and absorption spectrum (Hantzsch and Glover 1906). Yet another application of polarizing spectrophotometers was in the calibration and quality control of widely-used systems of industrial color standards (Priest et al. 1920, Gibson and Harris 1927). Umow (1912) describes a spectroscope with Nicol prisms and a Savart plate, for studying light absorption in materials and the nature of dyes. According to the Dictionary of Scientific Biography (1980-90), instruments of the Umow type were used both in various laboratories and in testing of colors in textile industries.

Gouy (1876, Fig. 29-13) introduced a new polarization spectrophotometer containing Nicol prisms and an Iceland spar rhomb, for measuring light intensity from a gas flame into which solutions of various metal salts were injected. An improved version is described in a comprehensive paper on the results of his experiments (Gouy 1879). Cotton (1899) states that they provided interesting insight into the general laws governing emission and absorption of light. Camichel (1895) made use of a modified Gouy instrument in research on absorption of light by crystals and by bromine. It is advertised in the catalog of Pellin (1899) as being suitable for research on spectra from flames and metallic vapors.

Sabatier (e.g. 1887) used the Crova meter in a study of the absorption of chromium- and bromine compounds, and the catalog of Pellin (1899) claims that it can provide quantitative analytical results. Camichel and Bayrac (1901) investigated phenol dyes with this type of instrument, and Vaillant (1903) studied solutions of salts and organic compounds. Houstoun and Brown (1911) carried out similar work with Houstoun's spectrophotometer mentioned above. Photometers incorporating Nicol prisms played a role in studies on processes occurring in colored flames by Saxer (1914), and in Brand's (1925) research on azo-dyes. Bovis (1928) mapped broad absorption bands of bromine with a Jobin-Yvon instrument and Nicol prisms. Polarizing photometers also found some use in botany (Pokrowski 1925), forestry and ecology (McLean 1919). For that sort of applications, R. Fuess (c. 1910) advertised three models of pocket spectrophotometers (Fig. 29-12).

Spectrophotometers with Nicol prisms clearly played a role in the development of absorption-analytical techniques for blood samples. Thus, Noorden (1880), Hüfner and Külz (1883) and Otto (1885) studied the properties of hemoglobin by means of Hüfner's meter, later also Krüger (1888), Dreser (1891, carbon monoxide poisoning), Zeynek (1899, methemoglobin), Saint-Martin (1900), Aron and Müller (1906), Butterfield (1909), Bürker (1911, calibration of a new type of colorimeter for blood), Williamson (1916), Hári (1917) and Welker and Williamson (1920). According to Ray et al. (1932), tables regarding hemoglobin absorption which Hüfner published before 1900,

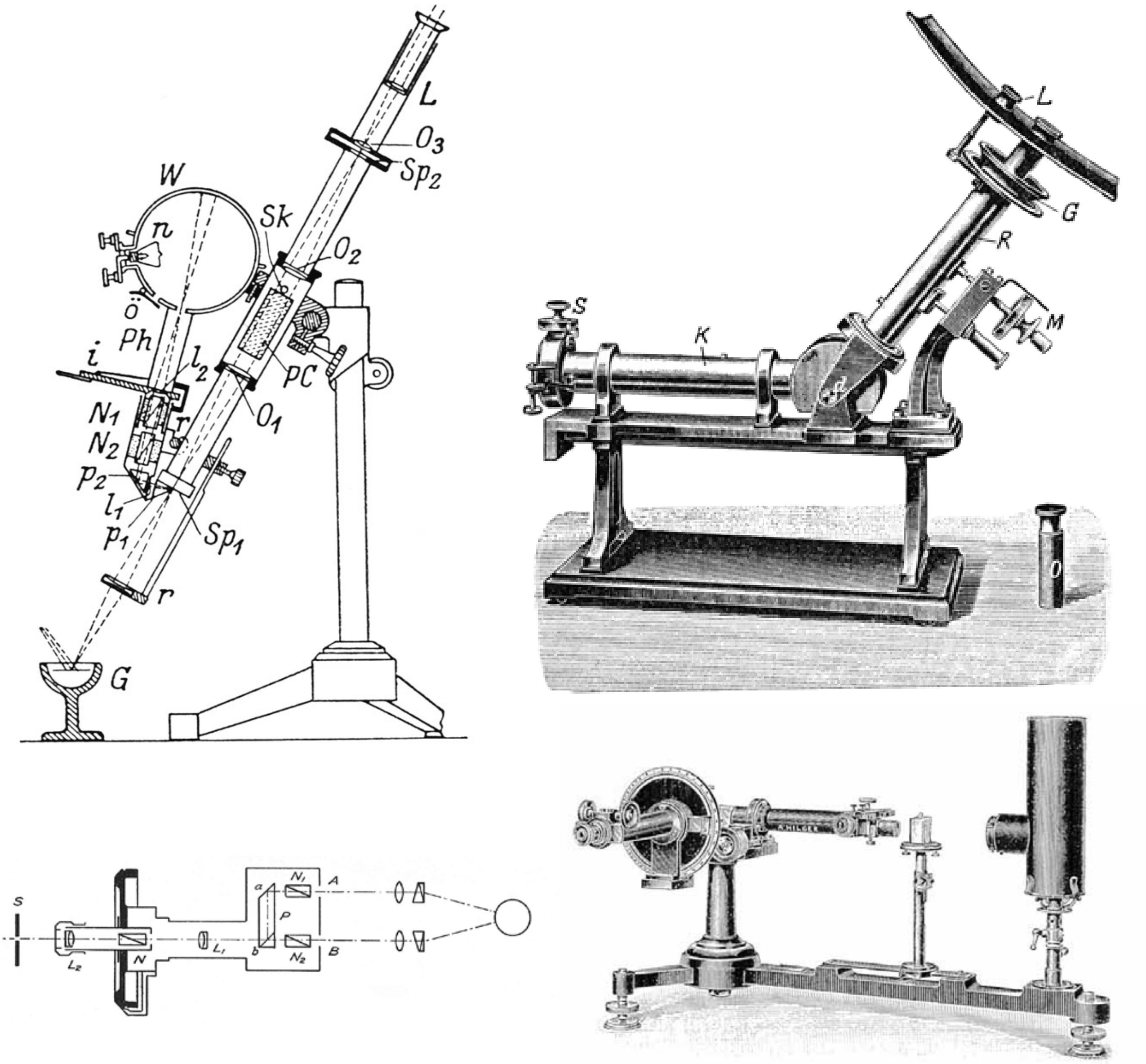

Figure 29-15. Spectrophotometers after 1890. *Top left:* The meter of Hauer and Kowalski (1914) in the process of measuring luminescence in a liquid. The light source causing the luminescence is omitted here. *Right:* König's (1894) spectrophotometer which was improved by Martens and Grünbaum (1903) and marketed for decades by Schmidt & Haensch. From Weigert (1927). Light which enters from the left (after having traversed for instance absorbing liquids) is dispersed by a glass prism at the bend, and then its intensity is estimated with the aid of Wollaston and Nicol prisms in the upper tube. *Bottom left:* Nutting (1903 and later) invented some instruments for studying light and colors. One which was produced by A. Hilger for various industrial applications, is shown schematically here (Walsh 1958). *Right:* G. Hüfner (1877 and later) described some new spectrophotometers, such as this one intended for research on blood. From Mees and Sheppard (1904).

were still in use. For a while it appeared that hemoglobin underwent some changes during illness but Butterfield showed that this was not the case. Hüfner improved his spectrophotometer around 1907 and it was used at first by Butterfield who then switched to a König-Martens meter (Meyer and Butterfield 1914, on anemia). Schertz (1923) employed the latter instrument in his research on important plant pigments related to hemoglobin. Kennedy (1927) found that results from a Bausch & Lomb König-Martens spectrophotometer compared favorably with new analytical methods which were being developed at that time. É. Branly (1882, Fig. 29-14) and Kraus et al. (1899)

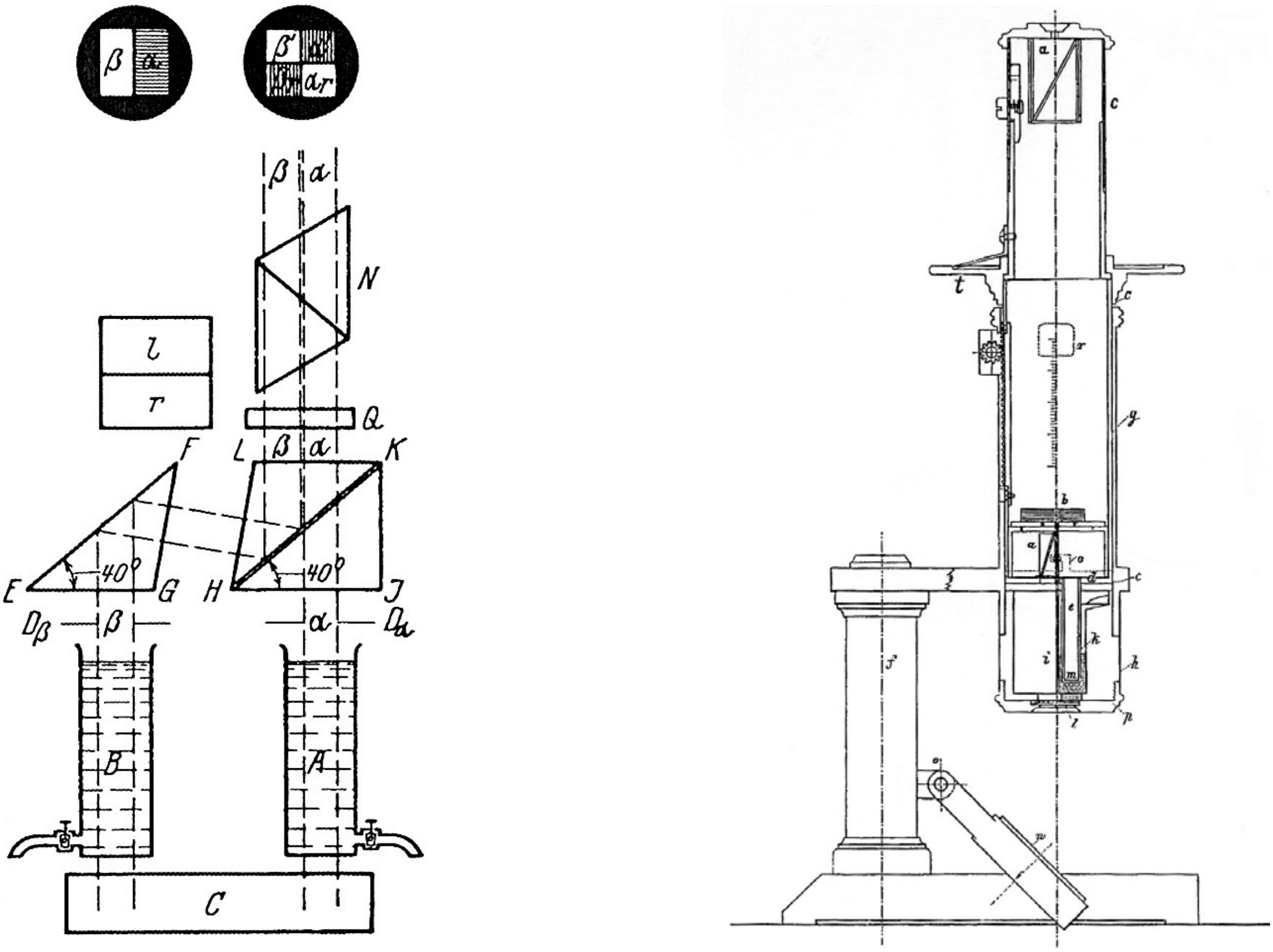

Figure 29-16. Two colorimeters. *Left:* G. and H. Krüss (e.g. 1909) designed and manufactured both spectrophotometers and colorimeters, some with Nicol prisms. The present example was used for estimating the concentration of metallic salts and other compounds in aqueous solutions. Diagram from Handbuch der Physik 19, 1928. *Right:* Meisling's (1904) colorimeter for measuring hemoglobin in solution.

used a Glan-type meter in studies on hemoglobin, Branly concluding that polarization spectrophotometers had great advantages over other instruments for such research. Few analyses of other bodily fluids seem to have been carried out with spectrophotometers in the nineteenth century; however, Klug (1895) made a series of experiments on the digestion of proteins with a Glan meter.

Soret (1883) used Iceland spar prisms in his spectrophotometer (Fig. 29-21) when investigating how blood and its various components absorb ultraviolet light. He found strong absorption at just over 400 nm. This was due to porphyrins which are characteristic for so-called hemoproteins, and the wavelength interval in question was subsequently named "Soret's band". In some proteins he also found an absorption peak around 275 nm; it may for instance be responsible for some of the damage to animal tissues caused by ultraviolet light (UVB-rays). Chardonnet (1883) also explored with the aid of Iceland spar prisms how eyes absorb ultraviolet light. In 1896 scientists realized for the first time that the chemical compositions of chlorophyll and hemoglobin are very similar. In that context, Iceland spar prisms had a small role in the continuing extensive research on the absorption spectra of porphyrins (e.g. Schunck 1898, 1899, Marchlewski and Schunck 1900) and plant pigments (Schunck 1903). As stated above, colorimeters were probably more popular than spectrophotometers in research on hemoglobin and related compounds in the early 20th century. However, Ray et al. (1932) and Drabkin and Austin (1932) note that with appropriate procedures, the photometers provide accurate and rapid determinations. The latter authors were using a König-Martens instrument.

Instruments with Nicol prisms were not involved in the measurements on which J. Stefan in 1879 based his hypothesis that the total light intensity emitted by a surface increases with the fourth power of its absolute temperature. Violle (1881) measured such thermal radiations with a polarization spectrophotometer which he had evolved from older types (Fig. 29-14). He considered that a more complex formula of his own fitted his results better than Stefan´s. Unfortunately for him however, L. Boltzmann demonstrated in 1884 that the fourth-power law could be deduced theoretically from the basic principles of thermodynamics. Garbe (1887) who measured the light intensity from various lamps with a Crova instrument (cf. above), had even less luck than Violle as he had more faith in an old formula proposed by Becquerel (1863, see section 17.3) than in the Stefan-Boltzmann law for use in his interpretation.

In connection with the research on thermal emission of light, Nicol prisms took part in attempts to solve the question of how the radiated energy is distributed by wavelength at different temperatures. Preliminary measurements were made by Nichols (1879, 1880) with a leucoscope (see section 29.7), and by Lecher (1882) and Wiedemann (1889) on hot metals using photometers of the Glan type. Also, a few studies on the intensity of sunlight employed polarization photometers (Crova and Houdaille 1890). Important series of measurements on the spectral distribution of black-body radiation (Paschen and Wanner 1899, Wanner 1900, Paschen 1901) were performed in part with König's spectrophotometer which contained Rochon and Nicol prisms as already mentioned. These measurements are referred to in a paper by M. Planck (1900) on such radiation, and they aided in the verification of W. Wien's hypothesis that the wavelength of maximum intensity is inversely proportional to temperature. The important distribution formula published by Planck in 1901 which marks the beginning of quantum theory, was however deduced to explain results on the thermal radiation which had been acquired by electrical sensors (thermopiles, bolometers, etc.)

For a sensible interpretation of fundamental and practical measurements of light intensity, it is necessary that all investigators have access to standardized light sources. Many types of candles, oil-, gas- or electrical lamps were employed for this purpose after being thoroughly tested and optimized for consistency of output. Violle (1884) suggested that the light emitted per area by pure platinum at its melting point should be used as a universal standard. In estimating this quantity, he used both his spectrophotometer mentioned earlier in this section, and a modified version. Violle's proposal which may have been the first one for a scientifically defined reference in the field of luminosity, was favorably received by many (Winkelmann 1906, p. 755). Unfortunately there were serious technical problems with its implementation (see a committee evaluation in the British Association Report for 1888; Liebenthal 1907, p. 134, 147) and it was little used until 1931 or later. After much development work, a proposal for a standard similar to that of Violle was ratified internationally in 1948.

In continuation of the work on thermal radiation, increased efforts took place to utilize it in the estimation of high temperatures. As an example, J. Violle made measurements with his spectrophotometer in the early stages of development of H. Moissan's electrical furnaces, and he assisted in the research for which Moissan was awarded the Nobel prize (see section 22.4). A König-Martens meter was used at the Physikalisch-Technisches Reichsanstalt in determinations of the melting points of palladium (Hoffmann and Meissner 1919) and platinum.

H. Wanner whose papers were referred to above, adapted the instrument of A. König for the specific purpose of measuring the temperature of glowing objects at 900-4000°C (Wanner 1902, Liebenthal 1907, p. 421, Burgess and Le Chatelier 1912, Ribaud 1931, p. 282-289). The Wanner optical pyrometer was produced commercially for some 15-20 years (Fig. 29-17, top) and was

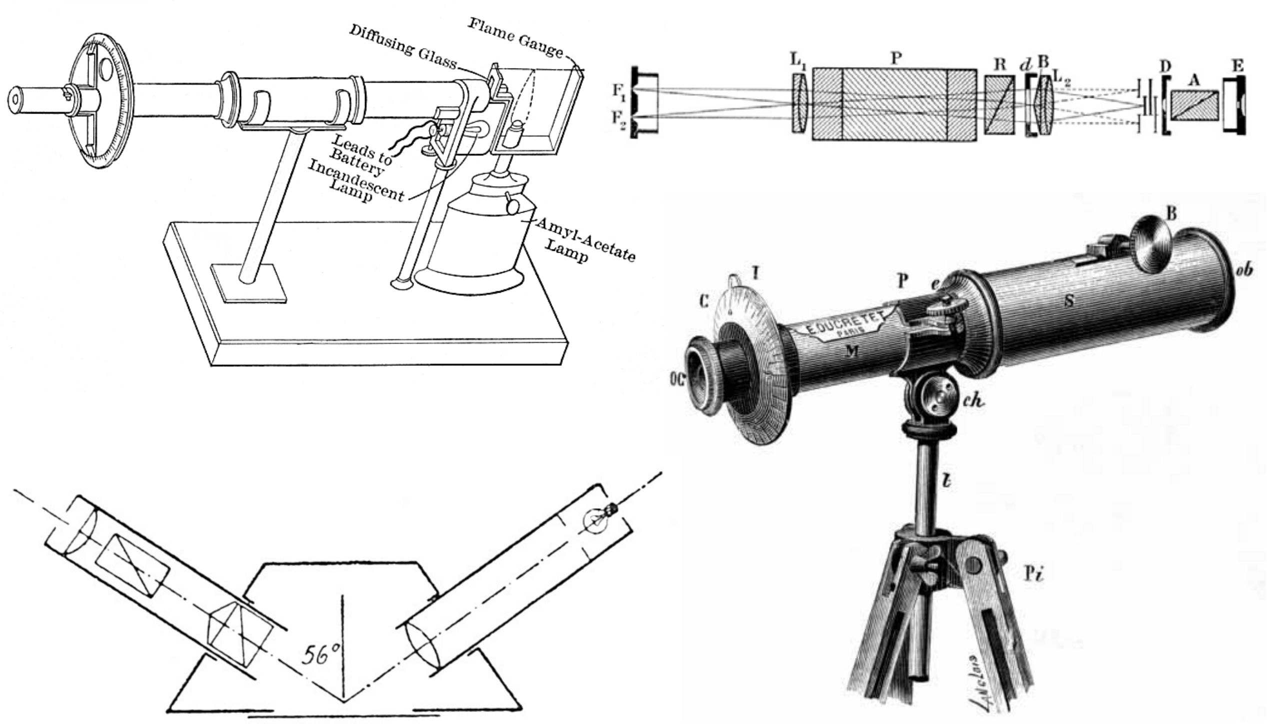

Figure 29-17. Specialized photometers. *Top:* Wanner's (1902) pyrometer, produced in quantity for high-temperature scientific research as well as industrial applications. P is a glass dispersing prism, R is a Rochon prism and A is a Nicol prism. The instrument is calibrated with the gas lamp. From Burgess and Le Chatelier (1912) and Ribaud (1931). *Bottom left:* A simplified cross-section (Wien-Harms 1928) of the gloss meter designed by Kieser (1919) for use in the paper industry. It contains Nicol and Wollaston prisms. *Right:* Ducretet's (1889) pyrometric telescope for estimating furnace temperatures, with Nicol prisms and a quartz plate. The illustration is from the catalog of Syndicat des Constructeurs (1901-02).

said to be "of great precision and convenience" in a review paper on high-temperature measurements (Phys. Rev. 19, 1904). A 1914 model reached down to 650°C. It clearly found many uses in industry, contributing to improved products and energy savings. Among these uses one may mention the melting of various metals and metal oxides (Nernst and Wartenberg 1906, Greenwood 1909, Ruff 1910), production of glass, ceramics and cement, operation of carbon-arc lights (Waidner and Burgess 1904), conversion of coal to coke and gas (Jüptner 1908), and properties of coal ash (Fieldner and Hall 1915), as well as production of fire-resistant materials (Goodwin and Mailey 1906, Ruff and Schmidt 1921, Matignon 1923), carbides and other abrasives (Lampen 1906, Pring 1908, Gillett 1911), heavy metals (Kalmus 1914, Lely and Hamburger 1915), various silicates (Stein 1907), steel (Greenwood 1918), and filaments for electrical bulbs (Pirani 1910). O. Serpek invented a new procedure for the synthesis of aluminium nitride which was among other things useful as a refractory material for furnace linings and as an intermediate step in the production of both ammonia and aluminium. In one of his many patents (Serpek 1909) it was emphasized that the process required "precise monitoring of the temperature by means of a Wanner pyrometer". This type of pyrometer also aided in research on a commercially more successful method of nitrogen fixation (Thompson and Lombard 1910). Other users of Wanner instruments included Nernst (e.g. 1906) who studied black-body radiation, Jellinek (1906) who investigated the thermodynamics of decomposition of nitrous oxide, Pring and Fairlie (1912) who followed the generation of methane from carbon and hydrogen, and King (1913, and more) in a thorough survey of the effects of temperature on the emission spectra of several metals, among other things for comparison with stellar spectra.

One more area of application of photometry with the aid of Nicol prisms may have been in studies of the various materials involved in photography. For instance, the darkening of photographic emulsions had to be known as a function of light intensity, exposure time and wavelength. Here one may point to papers by Messerschmitt (1885) who charted with a Glan-Vogel spectrophotometer the absorption of so-called sensitizers that improved the performance of photographic plates, Mees and Sheppard (1904, Sheppard 1909, etc.) who made extensive researches in this field with Hüfner- and Hilger- instruments, Kron (1913), Helmick (1918, with a Lemon meter), and Schaum (1924, König-Martens meter). While many other types of photometers were used in photographic research, W. Meidinger claims in the handbook by Gehrcke (1927, vol. II, p. 39) that "polarizing photometers are better suited to measurements of photographic darkening than any others".

29.6 Nicol prisms in astronomy, from 1875

Iceland spar has had a surprising variety of roles in observational astronomy. Elsewhere in this compilation, there are accounts of the measurements by F. Zöllner on the light intensity received from stars and planets (section 18.4, Fig. 29-11), the dispersion prisms used by W. Huggins and others (section 29.8), research on the magnetic field of the Sun (section 30.1), and the remarkable instruments invented by B. Lyot (section 39.2). Salet (1910) remarks that because of the polarization of sky light, stars can be seen more clearly in the morning and evening through a Nicol prism than with the naked eye, but I have not seen other references to similar applications. Some important astronomical projects featuring Iceland spar (mostly in the form of Nicol prisms) will be described below.

"After spectral analysis, photometry is the most important field of astrophysics" (Newcomb-Engelmann 1921). An improved version of one of Zöllner's astrophotometers, shown at the 1867 Paris Exhibition, was installed in several observatories in Europe and beyond from 1870. With some further improvements (e.g. Müller 1891, 1901), they were used much until the 1910s, sporadically even to 1930 (Hassenstein 1932) although photographic techniques and photoelectric sensors had by then mostly replaced visual photometry. The greatest contribution of the Zöllner-type instruments was the measurement in 1886-1905 at Potsdam (Fig. 29-11) of the magnitudes of all stars in the northern celestial hemisphere to M= 7.5. Their total number was about 19,000 (see notes at Müller and Kempf 1894, 1899 in the list of references below). Detailed studies of the absorption of starlight by the atmosphere were also made by means of polarization photometers (Trépied 1876, Müller 1883, 1891; Bianchi 1915).

A Zöllner instrument was tested for a few years at the Harvard College Observatory (Peirce 1878). Then E.C. Pickering who was its director from 1876, developed different photometers containing a Nicol prism and either a beam-splitting prism from Iceland spar and glass, or an Iceland spar plate (Pickering 1879, 1882, Pickering et al. 1884, Fig. 29-18 bottom). In these devices the observer saw side by side a star of known magnitude (in the role played by a lamp flame in the original Zöllner instruments) and the star to be measured. Extensive systematic measurements of star magnitudes began at Harvard in 1879. Pickering and his collaborators made around a million observations on 45,000 stars in the whole sky until 1906, in part if not mostly with the polarizing photometers (see Pickering 1895, King 1955, p. 296, Sterken and Staubermann 2000). In the entry on G. Müller, the Dictionary of Scientific Biography (1980-90) states that these large efforts by the Potsdam and Harvard groups "furnished the most exact photometric information on stars then available" and that their published records are still "an indispensable standard work.". Instead of the Nicol prisms, wedges of smoked glass were sometimes used for attenuation, but there is

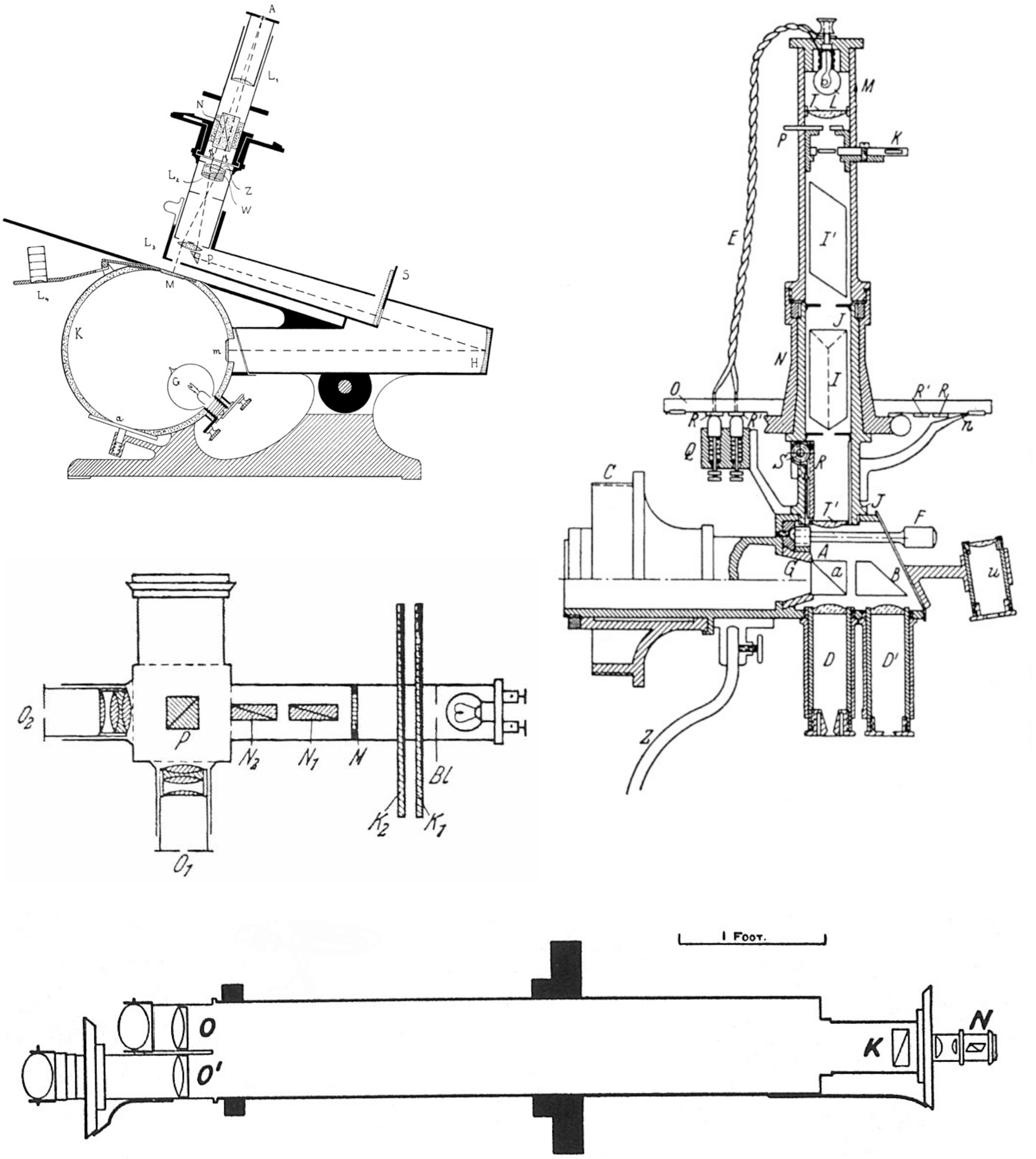

Figure 29-18. Photometers for astronomical research. *Top left:* The Martens (1900) photometer, here set up for measurements of the darkening of photographic plates (from e.g. astronomical telescopes or spectroscopes). The observer uses Iceland spar prisms to attenuate light received directly, until it matches the intensity of light that has been partly absorbed on passing through such a glass plate. From Weigert (1927). *Center left:* Rosenberg's (1921) astrophotometer. Light from the Moon or other heavenly bodies falls from above on to the Lummer-Brodhun glass prism P. An observer in O_1 or O_2 compares it to the light from the bulb, which may be dimmed with the Nicol prisms or the colored glass wedges K_1, K_2. *Right:* E. Schoenberg's photometer dating from 1917 (Hellerich 1936) for measuring light from the Moon and planets. The light beam enters from left in the lower part of the equipment, and an observer at D compares it with light from the bulb at the top. *Bottom:* Pickering's (1882) meridian photometer, one of several photometric instruments that he designed and used with his observatory staff for measurements on tens of thousands of stars. Light from two stars coming through O and O' is compared with the aid of the quartz/glass Rochon prism K and the Nicol prism N (Walsh 1958).

evidence in the writings of Pickering, C. Pritchard and others (e.g. Silva 1913) that these were calibrated with the aid of Zöllner meters or other arrangements containing Nicol prisms.

As mentioned in section 18.4, Zöllner (1868) had made additions to his astrophotometer which enabled him to express the colors of stars by numerical values. He may have hoped that this method would replace subjective color classifications initiated earlier by J. Schmidt, H. Klein and others. A few astronomers did carry out systematic star-color surveys by Zöllner's method (e.g. Rosén 1870, Peirce 1878) and a few others made occasional observations (cf. Sterken and Staubermann 2000, p. 58); however, most of those interested in the subject such as G. Müller, P. Kempff and H. Osthoff continued using the unaided eye and possibly colored glass plates until after 1900. Their methods were for instance of insufficient resolution to notice that the colors of so-called cepheid variables changed along with their magnitudes. Around the turn of the century, new methods of color classification emerged. One of these (named after K. Schwarzschild) depends on the fact that the human eye (and therefore also the Zöllner- and Pickering- photometers) is most sensitive to light of around 560 nm wavelength while certain standard photographic plates experience maximum darkening at 440 nm. These methods therefore yielded two unequal magnitudes for a star, the difference depending on how its radiation was distributed in the spectrum. This difference (called color index) allowed stars to be divided into 20-odd classes (Newcomb-Engelmann 1921, p. 550), and some astronomers attempted to relate it to temperature. Still other classification schemes were developed early in the 20th century (including the OBAFGKMN-scheme at the Harvard Observatory), soon replacing the above ones.

In addition to the very large sky surveys, the Zöllner- and Pickering- photometers were used in the detailed monitoring of a great many variable stars such as novae, cepheids, and eclipsing binaries, see Fig. 29-19. These measurements were carried out at various observatories as well as at Potsdam and Harvard, for instance by V.K. Ceraski who also measured star clusters (Ceraski 1902), by Roberts (1906), Wendell (1909), Dugan (1911), and McDiarmid (1924). A very extensive review of all available observations on variable stars to 1915 was prepared by Müller and Hartwig (1918, 1920, 1922). According to the Dictionary of Scientific Biography (1980-90), polarization photometers provided e.g. a considerable part of the experimental basis for understanding the behavior of binary stars. In that work, the measurements of Shapley (1915) with Pickering photometers were the most important. Shapley's interpretation also led to his valuable conclusion at around the same time, that the cepheids were not binaries. He subsequently followed up (e.g. Shapley 1918) E. Hertzsprung's 1913 suggestion that in cepheids a close correlation existed between their average luminosity and period of oscillation. This was a large step in the construction of a scale for the size of the universe. A part of the data set processed by Hertzsprung and Shapley for this purpose seems to have been acquired with Iceland spar photometers. Danjon (1928) who presents a critical appraisal of previous observational techniques, also reports a large amount of photometric measurements on selected variable stars in the 1920s at Strasbourg with a Zöllner instrument and a new polarizing photometer of the Pickering type.

In 1691, I. Newton had asked the fundamental question whether light of all colors travelled at the same speed through the emptiness of space. Much later, it became a central point in the theories of Maxwell (and still later, of Einstein) that all electromagnetic waves had the same speed in space. In the mid-19th century F. Arago suggested a means of answering this question, by checking whether the variations in brightness of stars like Algol (an eclipsing binary) were in step for red and blue light. Nordmann (1909a) made such observations on some stars of the Algol type, using his own photometer (Fig. 29-19) which had two Nicol prisms like that of Zöllner. Nordmann placed different color filters (aqueous solutions of dyes) in turn in front of its aperture. His methods and conclusions met with some criticism, but Shapley (1923) later made a similar analysis of the magnitude observations made (on photographs with different color sensitivities) by S.I. Bailey

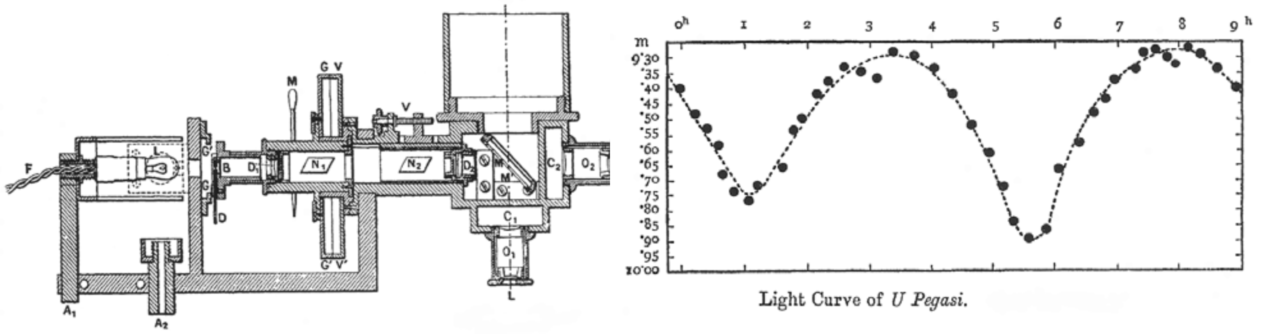

Light Curve of *U Pegasi*.

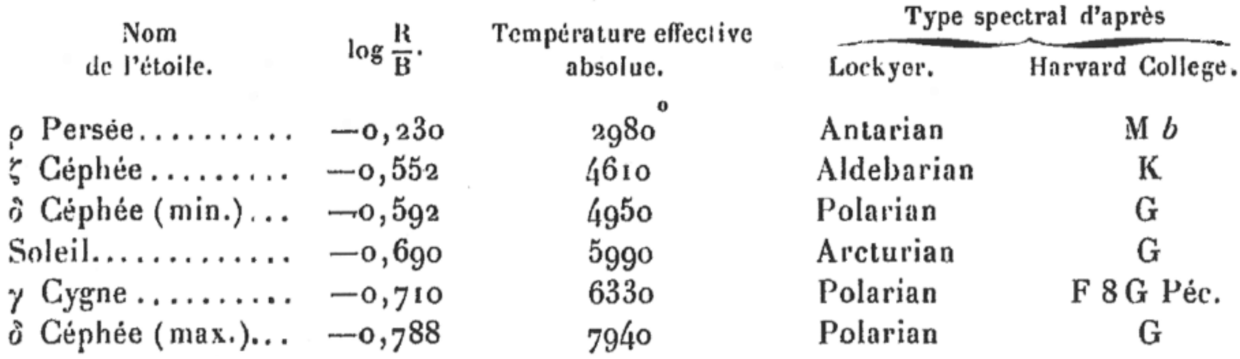

Nom de l'étoile.	$\log \frac{R}{B}$.	Température effective absolue.	Type spectral d'après Lockyer.	Type spectral d'après Harvard College.
ρ Persée..........	—0,230	2980°	Antarian	M *b*
ζ Céphée.........	—0,552	4610	Aldebarian	K
δ Céphée (min.)...	—0,592	4950	Polarian	G
Soleil.............	—0,690	5990	Arcturian	G
γ Cygne..........	—0,710	6330	Polarian	F 8 G Péc.
δ Céphée (max.)...	—0,788	7940	Polarian	G

Figure 29-19. More on the photometry and colorimetry of star light. *Top left:* The astrophotometer of Nordmann (1909a) with Nicol prisms and liquid color filters. Light from a star coming down the telescope on the right is compared to an electric light source. *Right:* O.C. Wendell's results (Roberts 1906) on the magnitude of a certain Algol-type variable (i.e. eclipsing binary) with a 9-hour period. One of E.C. Pickering's polarization photometers was used for these measurements. *Bottom:* Part of Nordmann's (1909b) table of effective surface temperatures of various stars, based on estimates from his heterochrome photometer. Later, these temperature values were found to be rather inaccurate.

and by himself. Shapley concluded that the difference in speed between blue and yellow light was definitely no more than one part in 2.10^{10}. This result which may be considered a satisfactory confirmation of the theories of Maxwell and Einstein, could not have been easily obtained by any terrestrial means, as the accuracy of light-speed measurements was at that time around one part in 10^5. Another question of fundamental significance to the above theories is whether the motion of a celestial light source affects the speed of electromagnetic waves emanating from it. This question was also settled through analysis of light from eclipsing stars (e.g. Zurhellen 1914).

As already noted, spectrophotometers with Nicol prisms were used to some extent in research on the radiation from very hot solids (see e.g. Crova 1878, 1880) and gases at varying pressures (Lagarde 1885). The results may have hastened various discoveries in that field. Crova (1878, p. 981) discussed the possibility of estimating the surface temperatures of stars by comparison with the spectra of hot objects and flames. H.C. Vogel (1877, Fig. 29-13) modified the Glan spectrophotometer and incorporated it in a telescope, in order to make important measurements on the solar radiation (see Hellerich 1937, p. 638-639) as well as on the absorption of light both in its outermost layers and in the terrestrial atmosphere (Müller 1882). He also measured the radiation from several stars at different wavelengths (Vogel 1880).

Among the scientists who had by 1900 started dividing bright stars into classes according to their temperature, was N. Lockyer (1904). He had a spectroscopic camera made, containing an Iceland spar dispersing prism and quartz lenses, in order to estimate ultraviolet stellar radiation. Harkányi (1902) pointed out that the data of Vogel (1880) could be used to find the actual star temperatures, which he did himself for some stars and the Sun. Nordmann (1909b) published such estimates which he had deduced for 14 stars (Fig. 29-19) from data obtained with his color-filter photometer recently mentioned. Next, Wilsing and Scheiner (1909a) used a Nicol-prism spectrophotometer in order to estimate the temperatures of 109 stars assumed to radiate as black bodies. Wilsing et al. (1919) added a similar number, and Wilsing also attempted to compute the diameters of stars from their results. The temperature values obtained by these pioneers turned later out to be too high because the spectral distribution of starlight differs from that of black bodies. Baillaud (1924) recorded the spectra of a few stars down to 350 nm wavelengths using a large Iceland spar dispersing prism. Graff (1931) made extensive observations on star colors with the aid of Nicol prisms and colored glass wedges, but it seems uncertain whether his data were processed.

The planets and the moon were not excluded in this photometric activity, right from the early work of Zöllner (1868). H.C. Vogel (1880) measured the intensity of sunlight reflected from the moon with his polarization spectrophotometer, and Landerer (1889) and later Barabascheff (1927) investigated the polarization of this light using an adapted version of Cornu's (1882) polarimeter. They compared the results to the properties of light reflected from various rock types and soil. G. Müller, Pickering, Landerer and others made detailed measurements of the light from the planets, and some studies were even made on light from satellites (e.g. Guthnick 1910), comets and minor planets of the solar system with Zöllner- and Pickering-photometers. Rosenberg (1921a) designed apparatus which he called an "area photometer" containing Nicol prisms like the Zöllner instrument, in order to measure for instance the light from different regions of the moon. Yet another photometer of this type was constructed by E. Schoenberg (1917), see Fig. 29-18. Wilsing and Scheiner (1909b, 1921) studied light reflected from the moon, planets and rocks with a spectrophotometer containing Nicol prisms.

It was attempted to look for polarization in the light from nebulae (e.g. Meyer 1920) but interesting results were not obtained until much later. A method suggested by Pokrowsky (1912) for measuring stellar diameters with the aid of polarizing prisms also turned out to be impractical. See section 30.1 for discoveries of solar magnetic fields.

29.7 Iceland spar prisms in research on colors and vision

An important problem in photometry was connected with the comparison of intensities between two sources having different colors. Polarization photometers could surmount this to some extent if they contained thin quartz plates cut parallel to the optical axis (Zöllner 1868, Zahn 1874, Crova 1881), and the same applied to colorimeters (Pellin 1899, Meisling 1904). Here, the interference colors discovered by Arago (1811) and investigated by Biot (e.g., 1812b, 1816b) were utilized.

By placing quartz, gypsum or mica plates of different thickness between two Nicol prisms, one was in a simple way able to produce light having almost any combination of spectral colors. Complementary color pairs (which together make white light) could also be produced, and detailed studies on these matters were carried out by Brücke (1848) with a microscope. They were useful in the observations on color perception in polarized light mentioned at the end of section 13.1. Brücke's friend H. v. Helmholtz revived in the 1850s a largely forgotten theory of T. Young regarding three different color sensors in the human eye: these are the cone cells of the retina which are sensitive to light in three overlapping ranges of the spectrum (see König 1886). Brücke (1866; Ditscheiner 1871) later described a device with Iceland spar prisms which he called a schistoscope, in a book intended to teach people in art industries about colors. See the textbook by Rood (1881); the schistoscope was produced commercially by Steeg & Reuter (1914). Some other papers on color-vision investigations with the aid of Nicol prisms which have come to my attention are by E. Rose (1863, 1865), Dobrowolsky (1872, 1876), Raehlmann (1874), Spottiswoode (1874a), Glan (1881), and Rayleigh (1881b) who continued experiments in this field

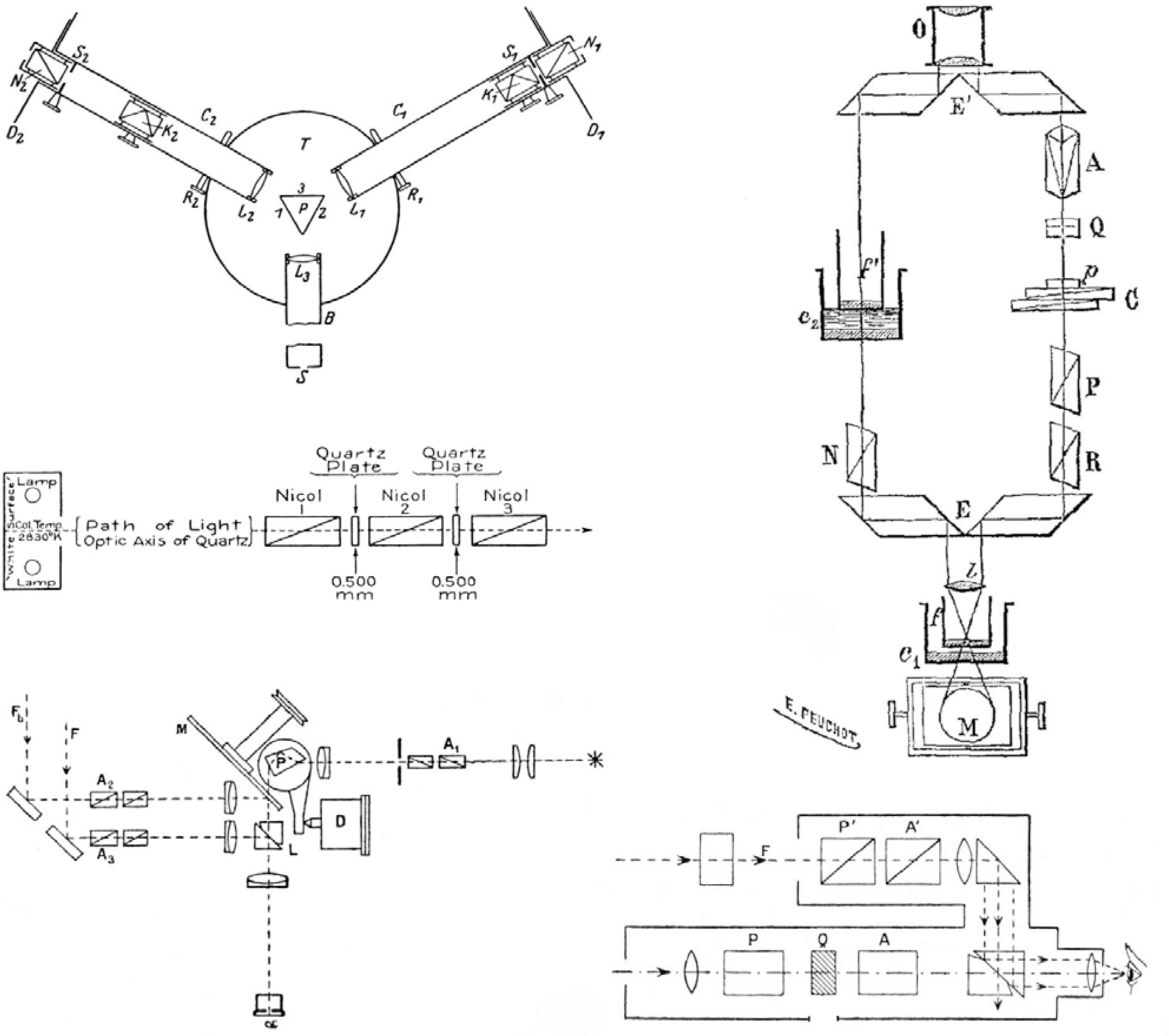

Figure 29-20. Instruments for research on colors, illumination and human vision. These might contain 2-6 Nicol prisms and sometimes also quartz plates. *Top left:* The color- mixing apparatus used by H.v. Helmholtz from around 1878, for testing color perception in a subject who looks through the aperture S. The apparatus was improved by A. König (Schmidt & Haensch 1893); the diagram is taken from König's chapter in Wien-Harms (1928). *Center left:* Schematic diagram of Priest's (1921) equipment for charting the spectral distribution of electrical illumination. *Bottom left:* An instrument produced by A. Hilger for measuring the colors of surfaces, based on a concept from Nutting (1913). *Top right*: Andrieu's (1886) equipment for the quantitative description of colors of various liquids such as wine. *Bottom right:* The chromoscope of Arons (1910, 1912), in which an experimenter can produce any desired color from a white light source (Fleury 1930).

carried out by J.C. Maxwell with glass prisms before 1860. An improved device (Chibret 1885) called chromato-photoptometer was also manufactured commercially. It was shaped like a small telescope; by adjusting Nicol prisms and quartz plates inside, some 2700 different colors could be produced for clinical testing of color blindness.

Further development of equipment for research on various aspects of color included the leucoscope described by König (1882) and Priest (1920). It consisted of a telescope containing two identical spar rhombohedrons, two Nicol prisms, and quartz plates of variable thickness, along with lenses. This type of device was used by several scientists studying human perception of light and colors (e.g. Brodhun 1888, Schuster 1890, Hering 1890, König 1897, Exner 1902, Lummer 1905). The chromoscope of Arons (1910, 1912, Fig. 29-20) was produced commercially to serve similar purposes, and it also aided in the calibration of some industrial color standards (Bache 1917). An anomaloscope designed by Göthlin (1925) for diagnosing vision defects contained three Nicol prisms along with color filters.

Around or before 1878, v. Helmholtz invented vision-testing apparatus where a researcher could by means of Nicol prisms and other components vary the intensity and color of two light beams viewed simultaneously by a subject (Fig. 29-20). An improved version was constructed at the works of Schmidt and Haensch (1893, 1896), one such instrument being presented to Helmholtz on his 70th birthday by the union of German makers of scientific equipment. König and Dieterici (1893) who describe this color-mixing apparatus, made extensive investigations on the color sensitivity of the eye. It was being produced at least until 1928 and found use into the 1950s. Other papers on its application include Tonn (1894), Kries and Nagel (1896), Allen (1902), Engelking (1925), Kravkov (1927) and Hecht and Shlaer (1936) dealing mostly with various aspects of color blindness, and Kohlrausch (1923) on sensitivity for changes in light intensity. The Helmholtz instrument was also to some extent used as a spectrophotometer, such as in Trendelenburg's (1905) studies on rhodopsin from the eyes of animals. The Young-Helmholtz theory of color perception, to which J.C. Maxwell later made important contributions, always had great influence in vision research, and it seems to be still considered valid in many respects. However, much debate took place between followers of this theory and a rival one proposed by E. Hering whose work was referred to above. The Young-Helmholtz theory may eventually have absorbed some of Hering's viewpoints, for instance regarding how the brain processes nerve signals from the eye.

Numerous other applications for color mixers with Nicol prisms and quartz plates were found, such as: comparison of light emitted by different lamp types (König 1882), choice of colors in the manufacture of for instance textiles or decorative objects (Borchardt 1913), development of light filters for the printing and photographic industries (Jones 1914), and the creation of artificial daylight (Priest 1918). One more field of application concerned the estimation of high temperatures, as in furnaces, kilns and incinerators (see Nichols 1879, 1880, Crova 1880, Priest 1921, Fig. 29-20, Skinner 1923). A handy telescope device for this purpose (probably based on Crova's design) was sold by the firm of E. Ducretet (1889, Fig. 29-17) for decades in Europe (cf. Struers 1925) and the U.S. Burgess and Le Chatelier (1912, p. 348-350) consider this Ducretet pyrometer to be quite inaccurate, while various authors (McWilliam and Longmuir 1907, Jüptner 1908, Arnold 1917-18) speak favorably of it in connection with for instance production of steel and coal gas, as well as in the ceramics and glass industries.

Bernard (1856) and Wild (1876) modified their polarizing equipment in order to produce a color resembling that of the sky, but Arago (Fig. 13-3) had in fact initiated similar experiments with more primitive means long before them. Pellin (1889, 1899, 1913) advertises a "chromatometer" invented by L. Andrieu (1886, Fig. 29-20) which was primarily intended for detailed observations on liquid industrial dyestuffs. It could also be used for monitoring colors of food pigments, wine, urine, blood etc. Weinschenk (1925, p. 92-94) and Rosenbusch (1924, p. 592-593) describe a similar method for studies of mineral colors in thin sections under the microscope. W. Ostwald (1919) introduced a color mixer nicknamed Pomi (= Polarisations-farbenmischapparat), containing Nicol and Wollaston prisms. This was in connection with novel theories of colors on which he and others published much from around 1916 until the 1930s. A sketch of this simple device may be found in Handbuch der Physik 19, p. 683, 1928. A more advanced color mixer with two Nicol prisms was described by Zeiss (1927). Ostwald was a great admirer of the poet J.W. Goethe and probably adopted some of his views on color perception (see section 7.3). While Ostwald's ideas in this field were controversial (see e.g. Kohlrausch 1920), they had wide influence on the standardization of colors for industrial and commercial purposes (cf. entry on Ostwald in D.S.B. Supplement I; Pulfrich 1925, Weigert 1927, p. 276-277).

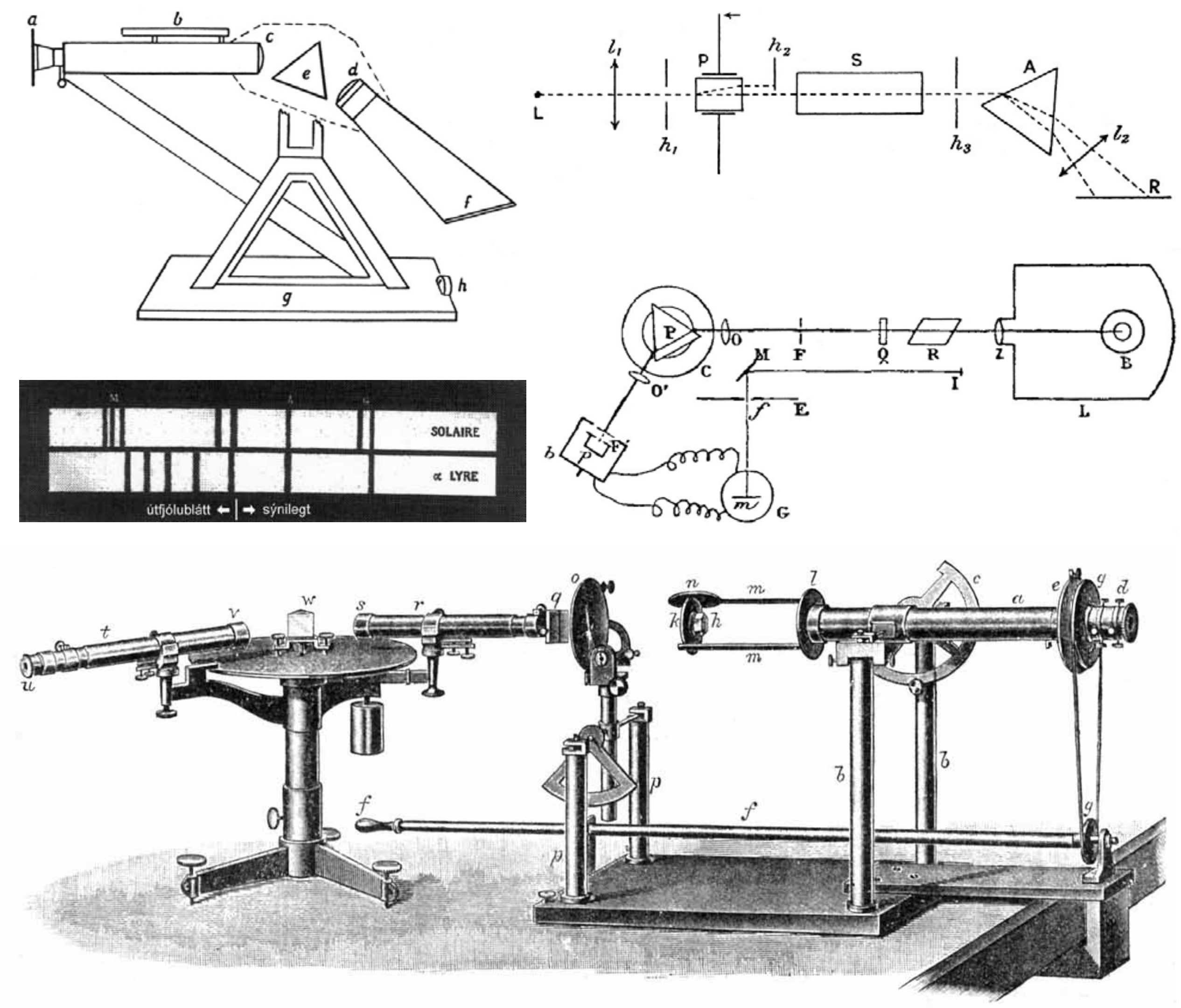

Figure 29-21. Research on ultraviolet and infrared light, before 1900. *Top left:* Huggins' (1880a) spectroscope with quartz lenses, for analysing ultraviolet light from young stars. The light enters through a slot in a on the left-hand side, is dispersed by the Iceland spar prism e and falls on a photographic plate at f (King 1955). Spectra obtained with this instrument (Huggins 1877) are also shown. *Top right:* Joubin's (1889) experiment on the Faraday effect in liquids S in ultraviolet light. P and A are Iceland spar prisms, R is a photographic plate (Lowry 1935). *Center right:* Carvallo's (1892) setup to measure optical rotatory dispersion in the infrared. P and R are made of Iceland spar. The intensity of radiation received by a thermoelectric sensor is monitored by means of the galvanometer G. *Bottom:* The equipment used by Soret and Sarasin (1882) for measuring ultraviolet rotatory dispersion in quartz. The dispersion prism w in their experiments was often one made from Iceland spar. The figure is taken from Tutton (1922).

Spectra could be manipulated in more ways with quartz plates. Thus, Mascart (1874, p. 396) wanted in some of his experiments to work with only one of the two closely spaced yellow lines of the sodium spectrum. He found a clever method of eliminating the other one by destructive interference, by letting his light beam traverse a quartz plate of 3.16 cm thickness between two Nicol prisms. Fabry and Perot (1900) used the same technique in early studies on the effects of external conditions on the structure and stability of spectral lines. So did Voss (1918) when measuring the ratio of the intensities of the sodium lines, and R.W. Wood (e.g. Wood and Dunoyer 1914, Wood and Mohler 1918) applied it in important researches on the "resonance radiation" of sodium and some other elements (see section 39.3). Attempts were also made to use the wavelength-dependent rotation in quartz plates cut perpendicular to the optical axis for spectroscopic purposes (Tait 1880).

Nutting (1913) described an instrument for measuring the intensity and color composition of light reflected from surfaces, developed at the U.S. Bureau of Standards and sold by A. Hilger. It did not contain quartz plates; instead, four or six Nicol prisms were used to attenuate different light beams (Fig. 29-20, see Fleury 1930). According to Hilger‘s 1924 catalog, this colorimeter was intended for the specification of colors of papers, powders, liquids, textiles etc., as well as for color sensibility determinations.

The ordinary polarization spectrophotometers like those of Glan or König-Martens often provided service in testing the sensitivity of the eye to differences in color or in intensity, either on their own or in combination with other instruments (Bohn 1874, Trannin 1876, Salomonson and Schoute 1904, Kohlrausch 1920). In catalogs around 1900, the Cambridge Scientific Instrument Co. offers apparatus with Nicol prisms (possibly based on the Glazebrook spectrophotometer) and a quartz plate, for use in tests for color blindness by Rayleigh’s (1881) method referred to above. Fedorow and Fedorowa (1929) tested temporary color-blindness caused by bright lights, with the aid of a Glan instrument. Bezold (1876) and König and Brodhun (1888) also carried out fundamental research in that field, employing Nicol prisms and an Iceland spar rhomb. With the projectors of Duboscq, Mach, Cheshire and Govi for polarized light which were mentioned in section 22.4, certain aspects of vision could be tested such as the permanence of images in the retina. W. Abney used an Iceland spar double-image prism in a part of his extensive research on light and color vision (Abney and Festing 1888), also Hering (1905-20) and Houstoun (1918). Lummer (1909, p. 401-402), Coblentz and Emerson (1918), Hecht and Williams (1922) and others employed a pair of Nicol prisms for attenuating light beams when studying human color perception.

Various material properties of the tissues of the eye were investigated with the aid of calcite plates (Carion 1853) and later with instruments containing Nicol prisms, for instance by Nordenson (1921). Ophthalmometers based on double refraction in prisms of quartz or Iceland spar were also invented. One such instrument (Javal and Schiötz 1881) was acclaimed as a significant achievement in research on astigmatism. Improved versions were on the market into the 1930s at least, and some related designs were patented. Some ophthalmoscopes for examining the interior of the eye employed Nicol prisms to eliminate unwanted reflections, as had been done with glass mirrors in equipment introduced by Helmholtz (1851). See the papers by Fuchs (1882) and Salomonson (1919), a patent obtained by Keeler (1936), and especially the publications of Koeppe (1921, etc.) who studied eye defects with polarized light from a lamp invented by A. Gullstrand (cf. Appendix 5). Gullstrand (1906) himself employed Nicol prisms in some of his ophthalmological work.

29.8 Research involving ultraviolet radiation

The absorption of ultraviolet light is less in quartz, fluorspar and calcite than in glass. According to Lowry (1935, p. 213), a 4-cm thick Iceland spar plate transmits rays down to 240 nm wavelength, while thinner plates can be used to 220 nm or so (Liveing and Dewar 1882, and other sources). Radiation down to 180-200 nm passes through quartz prisms, whereas light crown glass only transmits down to 360 nm and heavy flint glass stops anything shorter than 390 nm (Handbuch der Physik 19, 1928, p. 852; Houstoun 1927). Iceland spar was therefore chosen for dispersing prisms in some optical equipment operating with ultraviolet light in the late 19th century and into the 20th. One of the first instances of its use was in E. Mascart’s (1864) measurements of the wavelengths of the solar absorption lines. During this work he measured the index of refraction for the ordinary ray in Iceland spar as noted in section 21.2, to 320 nm. He selected Iceland spar because “its great dispersion of the ordinary ray spectrum allows one to distinguish many more lines" than in the case of quartz prisms. Around 1867, Mascart also investigated in this way the ultraviolet spectrum from hot cadmium vapor (cf. Mascart 1869, Soret 1878). Some makers or suppliers of scientific equipment advertised Iceland spar 60°- prisms, among them Adam Hilger who was mentioned at the beginning of chapter 25, and B. Halle (c. 1895)

A. Cornu who has also appeared before in this compilation, began studying solar radiation in the early 1870s (Cornu 1874b, 1880, etc.). He designed for this purpose a spectroscope with a dispersing prism of Iceland spar (Cornu 1879). He considered this prism to resolve adjacent spectral lines better than the gratings then available. Cornu used compound lenses of quartz and Iceland spar until 1879, and these were also made for Chardonnet (1881, 1883). Others who were researching ultraviolet light with Iceland spar prisms around 1880 included Monckhoven (1877, radiation from gases), Schönn (1880, radiation from metals; absorption in various materials) and Hartley (1882, ultraviolet emission spectra of the vapors of 24 metals). Hartley, however, mostly employed quartz prisms in his series of experiments.

W. Huggins who had since around 1860 investigated lines in the visible spectrum from stars, planets, nebulae and comets, was also interested in extending his observations into the ultraviolet. He succeeded with a new instrument equipped with quartz lenses (Huggins 1877, 1880a) where a 60° Iceland spar prism dispersed light from a reflector telescope on to a photographic plate (Fig. 29-21) in long exposures. His success was largely due to improvements in the smoothness of clockwork drives and in photographic techniques. Later, Huggins designed another spectroscope with two Iceland spar prisms in tandem, for increased resolution. He analysed light from many stars in this way to the late 1890s (see e.g. Huggins 1895, a news item in The Times 9 June of that year, and his obituary in Proc. Royal Soc. A86, 1912). Some of these spectra appeared in the Atlas of Huggins and Huggins (1899). In a review of that publication by G.E. Hale (in Astrophys. J. 12, 1900) it is indicated that Huggins' research was a milestone in endeavors to classify stars and understand their properties. This view is supported by later writers on the subject (cf. chapter 14 of King 1955). Huggins also obtained an ultraviolet spectrum from e.g. the Orion nebula with his Iceland spar prisms.

A most noteworthy discovery made by Huggins (1880a) concerned atomic hydrogen. It emits visible light of four spectral lines, and it appeared possible that their wavelengths might be expressed by a mathematical relation with a single variable. N. Lockyer had found a fifth spectral line in an experiment described in a short paper in 1880; that line was at 397 nm near the boundary between the visible and ultraviolet fields. In the sun's spectrum, it coincided with a strong calcium line. J. Balmer who was one of those attempting to find an empirical formula for the hydrogen lines, originally did not know of Lockyer's result. He then learned that H.W. Vogel (1879, 1880) had observed that line and four other ultraviolet ones in his laboratory (with glass prisms) and that these were prominent in Huggins' spectra of white stars (Fig. 29-21). Balmer (1885) subsequently published a simple formula which fitted all the lines with remarkable precision. It was $h.m^2/(m^2 - 4)$ where $h = 364.5$ nm and $m = 3, 4, 5,\ldots 11$. In an appendix to his paper Balmer notes that Huggins (1880a) had in fact discerned five more hydrogen lines, whose wavelengths agreed with his formula for $m = 12$ to 16. Stellar spectrograms acquired by the late H. Draper (mostly with quartz prisms, it seems; Draper et al. 1884) also recorded the same lines from two stars up to $m = 14$.

Huggins (1880b) and Liveing and Dewar (1882, 1889) investigated the ultraviolet spectrum of very hot water vapor with Iceland spar prisms; the latter authors also studied the absorption- and emission spectra of many metals, noble gases, carbon and its compounds, and other substances with reflection gratings and Iceland spar. From 1879, they realized that the spectra of elements recorded in their photographs and measurements (e.g. Liveing and Dewar 1883) could be separated into two alternating groups of lines having different appearance ("sharp" and "diffuse"). They also found regular patterns in the wavelengths of various visible and ultraviolet lines from for instance the alkali metals and magnesium, analogous to the Balmer series of hydrogen. The above-mentioned A. Cornu who was at around this time studying ultraviolet radiation from metal vapors with Iceland spar prisms in his laboratory, took a new look at the hydrogen spectrum and managed to confirm the presence of almost all of the ultraviolet lines seen by Huggins (Cornu 1886). Here he used a diffraction grating, but does not mention Iceland spar. Zenger (1889) described means of improving upon Cornu's technique.

From around 1885, H. Deslandres (1888, and other papers) continued Cornu's research with his equipment, to some extent employing Iceland spar prisms in work on the spectra of gases. He was the first to study in detail many aspects of so-called band spectra of molecules. These spectra are caused by changes in the rotation of the molecules, internal oscillations, or electronic rearrangements. He (Deslandres 1886) found among other things a very regular pattern in the band spectrum of nitrogen, especially in ultraviolet light. Deslandres made further discoveries in the field of molecular spectra over a long period from 1888, in this case also mostly using glass prisms and gratings rather than Iceland spar. He also studied the sun's corona, its chromosphere and surface phenomena. He and others like G.E. Hale, N. Lockyer and J. Evershed confirmed the presence of about 24 of Huggins' ultraviolet hydrogen lines in spectra of light from these regions of the sun in the years between 1892 and 1900, both during eclipses and at other times. Balmer's formula presumably aided in recognizing them in a myriad of other spectral lines from the sun. Sometimes (e.g. Deslandres 1893, Copeland 1900) equipment with Iceland spar prisms or lenses was used in these solar investigations, but different types of instrumentation had generally replaced them before 1900. The Paris workshop of P. Pellin constructed in 1899 a spectrometer with an Iceland spar dispersing prism for A. Paulsen of the Danish Meteorological Office. It was used in expedition to Iceland and Finland to study the aurora borealis, photographically recording spectral lines of wavelengths down to 337 nm.

Until the early 1880s various scientists had tried to come up with empirical formulas or physical models for the many spectral lines emitted by the elements: in some cases these lines appeared to have some regularity, in other cases not. Often it was assumed that they corresponded to harmonics in an oscillating system (see Schuster 1882, Liveing and Dewar 1883). In summary however (Kayser and Runge 1888), it was admitted that these attempts had been "complete failures" and that the matter had been dormant for a few years when Balmer (1885) "got things moving again". In 1885, Cornu had also pointed out certain analogies in the ultraviolet spectra of hydrogen and some metals. King (1955, p. 293) and other historical accounts stress that the ultraviolet studies by Huggins, Hartley, Liveing and Dewar, Cornu, and Deslandres played a role in laying the foundation for new extensive research on spectra. This refers in particular to the work of Kayser and Runge (1888 and later) who decided to carry out detailed mapping of the spectral lines of many elements with the latest techniques in gratings and photography. New relations were soon found between wavelengths, both within individual spectra and between elements (e.g. Runge 1888). The ultraviolet data were quite important in this work, because the grouping of lines into different series was most clear in that part of the spectra. The relations were generally represented by simple but accurate mathematical formulas, resembling that of Balmer. Rydberg (1890) also deduced even simpler rules from the wavelengths obtained by Liveing and Dewar, especially one stating that the sum of frequencies (or wavenumbers) of two lines often equalled the frequency of a third line. A related rule said that the difference in frequencies of two lines of the same element was often equal to that between another pair (or pairs) of its lines.

These researches on spectra had a decisive influence in the development of modern physics. Rydberg's rules on the sums and differences of frequencies became easily understandable as being consequences of the quantized energy levels of N. Bohr (1913) and of the conclusion by A. Einstein (1905a) that the energy of a light quantum is proportional to its frequency. Kayser and

Runge found additional examples of Rydberg's rules, and other investigators (such as W. Ritz in the years 1903-09) expanded these rules. Balmer's (1885) formula for the hydrogen spectral lines was a cornerstone of Bohr's theories; when altogether 33 lines of that series had been measured in stellar, solar and laboratory spectra, Bohr (1913) stated that "The agreement between the theoretical and observed values is inside the uncertainty due to experimental errors…".

Cornu (e.g. 1878, 1881) noticed that the spectra of the sun and stars faded out completely at wavelengths shorter than 290-300 nm, and he ascertained that they were absorbed by the earth's atmosphere. Hartley (1881), Cornu (1884) and Huggins (1889) provided evidence that ozone might be responsible, which was indeed confirmed later (see section 36.7). Cornu and Huggins employed Iceland spar prisms in their observations, at least in part. Huggins and Huggins (1890) found from their starlight exposures, that the ozone also absorbed some light in the wavelength interval 320-334 nm.

Others who were studying ultraviolet light from 1874 or earlier, used gratings for its spectral decomposition rather than prisms. The gratings along with prisms and lenses from quartz and fluorspar gradually took over the role of Iceland spar in this field, for instance in the extensive work by Kayser and Runge mentioned above. However, achromatic spar-quartz lenses for research in physics and astronomy remained in some demand until 1900 at least (see e.g. Nature 56, p. 34, 1897 and J.W. Gifford in British Assoc. Report 1900, p. 630-631), although V. Schumann had declared in 1893 (quoted by Leiss 1899b, p. 63) that they offered no advantage over lenses made from quartz only. Around 1905 new types of glass (uviol) which passed wavelengths down to 300 nm, appeared on the market. However, some scientists continued using the quartz-spar lenses for a while yet, such as Lowry (1908) in his early work on ultraviolet rotatory dispersion and Lowry and Vernon (1928) in studies on the optical activity of tartrates. Attempts were made to employ lenses from spar in the ultraviolet to replace Nicol prisms, in order to avoid loss of light by absorption and reflection (see Schulz 1925 and section 33.2).

Iceland spar and/or quartz prisms continued being employed for the dispersion of ultraviolet light in various studies on refractive indices, emission or absorption of other materials. P. Pellin advertises them in a joint catalogue of scientific instruments (Syndicat des Constructeurs 1901-02), but H. Buisson and C. Fabry indicate in a 1911 paper that they are rarely needed. In addition to works already mentioned, these prisms were used by e.g. Soret (1878, absorption by various substances), Chardonnet (1881, absorption), Schaik (1882, Faraday effect), Hartley (1883, techniques), Joubin (1889, Fig. 29-21, Faraday effect), Schunck (1901, absorption by chlorophyll), Liveing and Dewar (1901a,b, spectra of noble gases), Gramont (1909, spectra of metal vapors in electric sparks), and Bruhat and Pauthenier (1927, Fig. 29-22, techniques). Gramont's research was an important step towards the application of emission spectra in analytical chemistry.

Nicol prisms also served in research on rotatory dispersion of visual and near- ultraviolet light. For that purpose, prisms with air spacing instead of glue were often preferred, such as those named after Foucault (1857) or Glan (1880). This is because resins like the commonly used Canada balsam start absorbing at wavelengths shorter than ca. 340 or 320 nm (Cabannes 1921) while Iceland spar itself is transparent down to around 220 nm as mentioned above. In addition to work already referred to in section 22.3, research in this field was carried out by Soret and Sarasin (1875, 1882, Fig. 29-21, quartz), Guye (1889, sodium chlorate), Gumlich (1898, quartz), Lowry (1908, a camphor derivative), Lowry and Richards (1924, sucrose), Descamps (1926, novel spectro-polarimeter) and others, cf. review by Kortüm (1930). In particular, Darmois (1911) measured rotatory dispersion in camphor, pinene and other compounds with an ultraviolet spectroscope made entirely from Iceland spar. More in section 34.2.

In ultraviolet research from around 1900, new intense light sources were becoming available, encased in quartz (Küch and Retchinsky 1906) or uviol glass. Sparks between metal electrodes

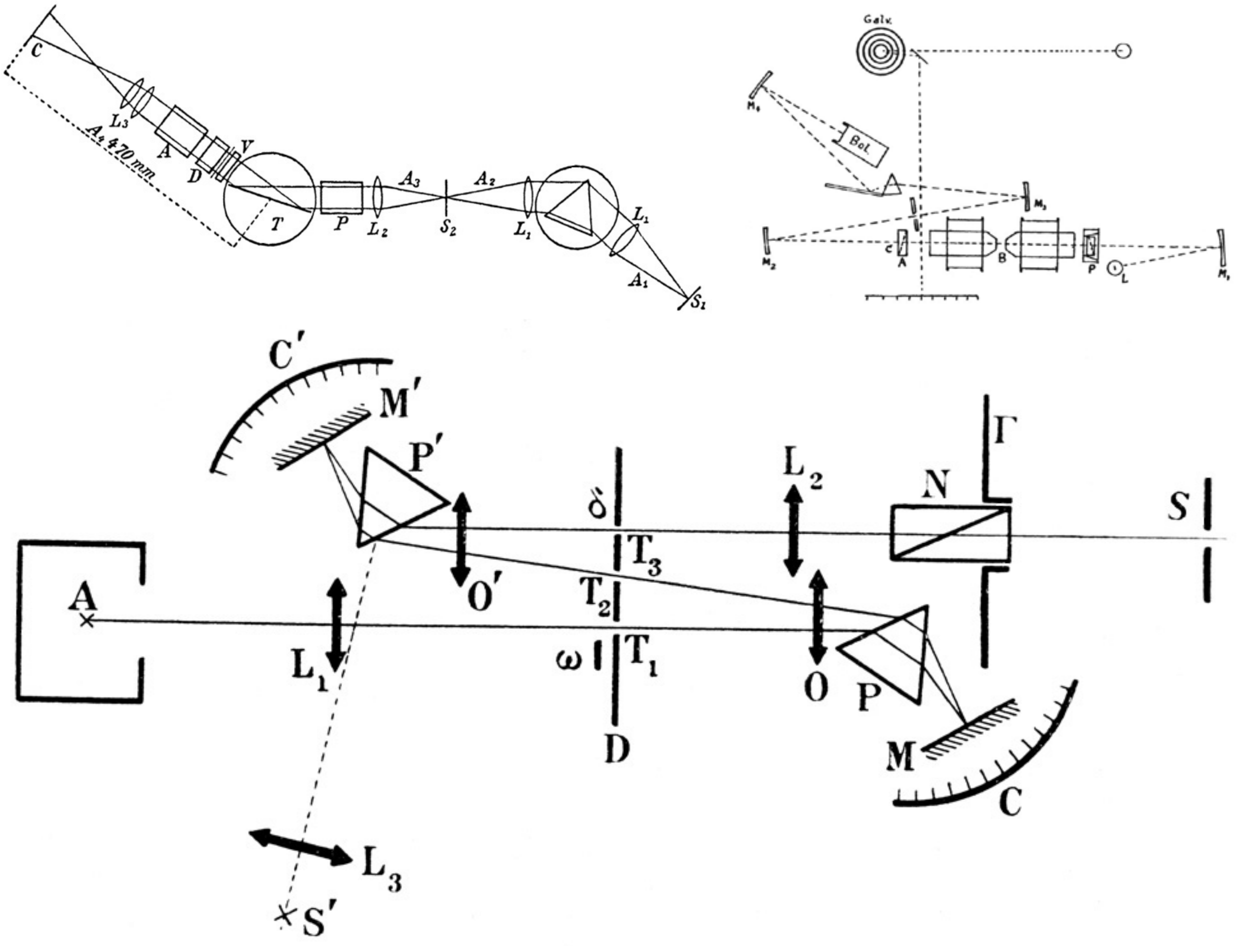

Figure 29-22. Techniques in research on ultraviolet and infrared light after 1900. *Top left:* Minor's (1903) measurements on the optical properties of metals. Linearly polarized monochromatic light from the Nicol prism P falls on a polished metal plate on the rotatable platform T. Its state of polarization is then analyzed with the Nicol prism A and the quartz plates V, D. *Right:* The experiment of Ingersoll (1917) on the Faraday effect in various materials, using infrared light from the lamp L. Samples for measuring are placed in B, P is a Nicol prism and A is a beamsplitter prism, probably from Iceland spar. *Bottom:* Equipment of Bruhat and Pauthenier (1927) for producing ultraviolet light of a narrow spectral interval (monochromateur). A is a mercury lamp, P and P' are dispersing prisms from quartz or Iceland spar, L_1 and L_2 are composite quartz-calcite lenses, and N is a Nicol prism. The light is then used in experiments on the other side of the screen S.

were also used, e.g., when the ultraviolet absorption of various dyestuffs and types of glass was being measured in a novel spectrophotometer with Nicol prisms (Krüss 1903). New methods of analyzing the state of polarization of ultraviolet light appeared, such as one suggested by Voigt (1901). It was applied by Minor (1903, Fig. 29-22), Nutting (1903a) and later others in studies of light reflection from surfaces of various materials. See more on this in section 36.9.

Iceland spar sometimes also had a role in polarizers for experiments with infrared light up to at least 2000 nm (Schaefer and Matossi 1930). Thus, Mouton (1877, 1879) used spar prisms in studies on the reflection of heat radiation from metallic mirrors, and two "enormous nicols of 5 cm aperture" when determining the wavelengths of this radiation by means of the method of Fizeau and Foucault (1847). In 1906 it was pointed out that a smooth selenium reflector was a better polarizer for infrared radiation than a Nicol prism, and this technique was utilized by for instance Nyswander (1909) and Schaefer and Schubert (1916). Javal (1905) dispersed infrared rays with an Iceland spar prism when measuring their transmission through metal foils. Ingersoll (1906, 1910, 1917, Fig. 29-22) used a calcite beam-splitting prism when measuring the Faraday effect in water for infrared wavelengths, and in studying reflection from metals. Iceland spar however continued being used where infrared light of certain well-defined wavelengths was needed ("Reststrahlen"-method, see section 34.2), cf. Czerny (1924) and Krebs (1927). Lowry (1935, p. 230-235) mentions Iceland spar rhombs and prisms in connection with measurements of the optical activity of quartz to 2500 nm, carried out by Hussell (1891), Carvallo (1892, Fig. 29-21), Dongier (1898) and others. Försterling (1928, p. 133-134) mentions that in research on polarized reflection by metals up to 2500 nm, calcite is the only available polarizing crystal. The infrared absorption bands for the ordinary and extraordinary rays in calcite do not coincide, so that thin calcite plates could be used as dichroic polarizers at certain wavelength intervals in the same way as tourmaline for visible light (Försterling 1928, p. 41; Schaefer and Matossi 1930, p. 72). This turned out to be practical in early laser technology (Bridges and Kluver 1965).

29.9 Biological research; microchemistry

According to Lecher (1917, p. 290) and Köhler (1926), polarizing microscopes have been of much use to biologists when probing various animal and human organs. In histology, research on muscles that had started around the middle of the 19th century as noted in section 18.3, was continued by Rollett (1891), Engelmann (1895), Schultz (1895) and Hürthle (1909), to name a few. The detailed structure of nerve fibers was also studied in polarized light (Göthlin 1913). Schmidt (1920b, 1924) confirms that examination in a polarizing microscope is an important aid in ascertaining the structure of many tissues in addition to muscles and nerves: he presents examples concerning bones, teeth (cf. also Ebner 1906), sinews, hair, horn, scales, shells and exoskeletons of invertebrates, foraminifera, corals, pearls, sponges and so on. See for instance thorough studies by Kelly (1901), Bütschli (1908) and Karny (1913) on calcareous skeletons and other deposits in tens of animal species. Biedermann (1914) reviews the entire field of exo- and endoskeletons in lower and higher animals as well as the corresponding elements of plants, with frequent reference to observational results from polarized-light microscopy. In particular he quotes (p. 1099-1100) two authors stating that it is difficult to understand the detailed structure of bone tissue without use of that technique.

In a review of Schmidt's (1924) book (Naturwissenschaften 12, p. 745-746), polarizing microscopes are said to have been for a long time an indispensable tool in human histology and pathology. By cursory inspection of publications from that period, it is evident that this often relates to the nature of a variety of pathological conditions, such as in the digestive system (see Ebstein 1888 and Schmidt 1924 on kidney- and gallstones, Panzer 1906 on inflammations), eyes (Lauber and Adamük 1909, Kranz 1927 and references therein), skin, cancerous tumors (White 1909), spinal fluids (Donath 1905) and so on. Among the commonest of such conditions are deposits of liquid crystals with a clear double refraction, including cholesterol and myelin; see section 27.2, Kaiserling and Orgler (1902), Löhlein (1905) and Adami and Aschoff (1906). Anitschkow and Chalatow (1913) found that if rabbits ingest food rich in cholesterol, it accumulates in various organs where its presence can be demonstrated by a polarizing microscope. This discovery was not followed up much in the next 30-40 years with regard to a connection between cholesterol in human food and in the cardiovascular system, but it was later seen to be quite important. Accumulations of galactosides in brain tissue were shown to be liquid crystals (Rosenheim 1914, 1916).

Microscopes were also used in the characterization of hundreds of crystalline materials isolated or synthesized during biochemical research, to aid in their identification. Examples include nucleic acids (Kossel and Neumann 1893), glycosides (Koenigs and Knorr 1901), glucosamine (Müller

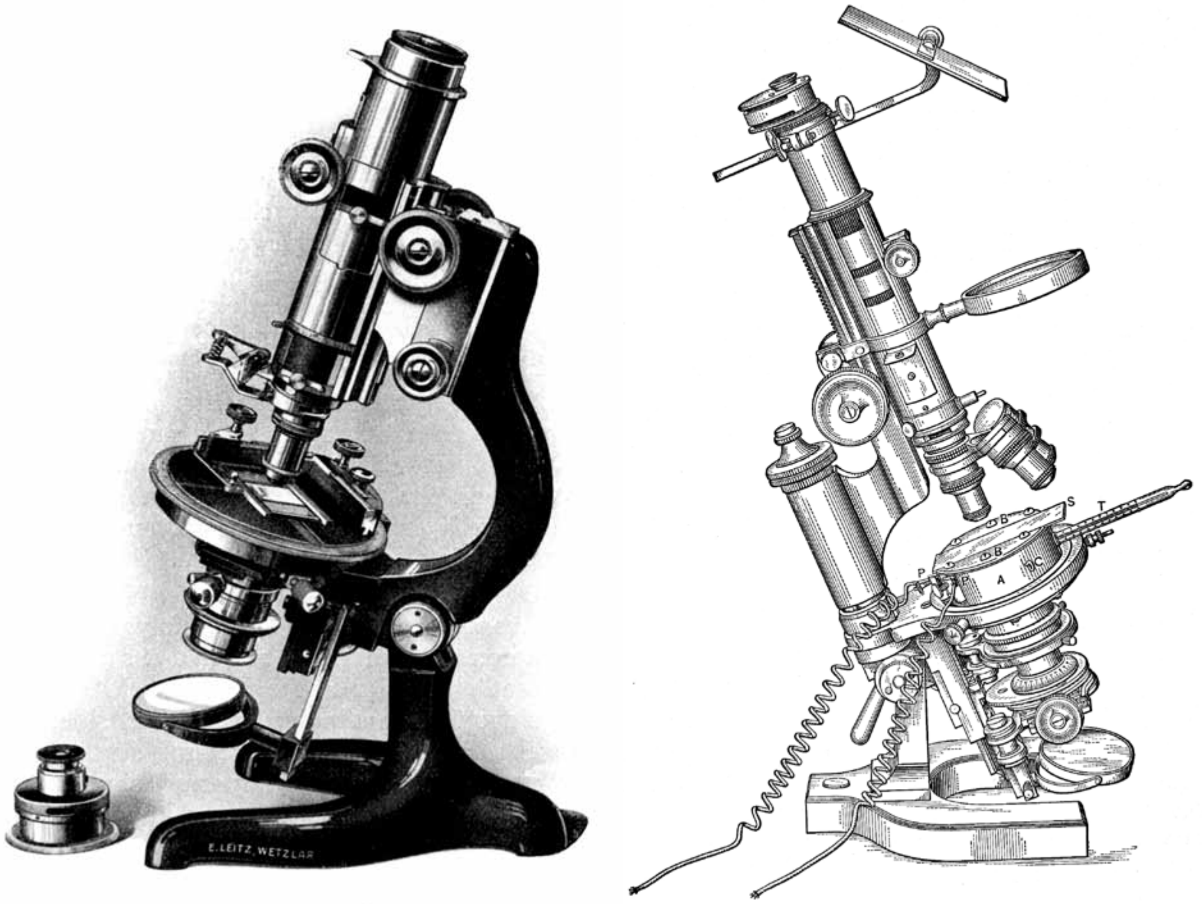

Figure 29-23. Specialized polarizing microscopes. *Left:* A microscope from E. Leitz (Schmidt 1924) for biologists. *Right:* E. Chamot's (1921) chemical microscope from Bausch & Lomb, equipped here with an electrical stage-heater for studies of phase changes and chemical reactions.

1901), sugars (Will 1885, Ekenstein 1896, Tanret 1903, Dufet 1904a), the bile acids studied by Wieland and Sorge (1916, Anhang), and alkaloids (Wolffenstein 1894, Willstätter et al. 1923). A notable work in this general field was the study by Reichert and Brown (1909) on hemoglobins from a large number of vertebrates.

Turning to the vegetable kingdom, H. Ambronn was among the pioneers in studying certain plant tissues by polarizing microscopes. He had towards the end of the 19th century used such microscopes when investigating colloid suspensions of matter in liquids, but in 1913-19 he carried out noteworthy research (e.g. Ambronn 1916) on the structure of cellulose. Here one had to distinguish between the conventional double refraction of crystalline substances and an analogous phenomenon caused by the shape of grains or grain parts, even if they are composed of isotropic materials. This phenomenon which was called rod- or plate- refraction depending on circumstances, had in fact been a subject of discussion in 1840-60; it was revived by Wiener (1904) as a consequence of his experiments mentioned in section 28.4, and by Braun (1905). Ambronn himself revived C. Nägeli's micellar theory of cell structure (see final paragraph of section 18.3), which had been largely forgotten for twenty years. Additionally, Ambronn and others studied the optical properties of various gels (e.g. Neubert 1925).

The double refraction observed in the fibers of many industrially valuable organic materials (wool, cotton, hemp, silk, wood, etc.) is due to their being composed of elongated sub-parallel molecules. Polarizing microscopes have been of much use in research on such fibers in the 20th century (cf. Schiller 1906, Bowman 1908, Herzog 1909, 1916, Harrison 1918, Frey et al. 1926, and Hartshorne and Stuart 1950, p. 439-452). Treatment of fiber samples with certain colored chemicals, metal salts, iodine or other compounds (dichroic staining) can enhance their double refraction, see for instance Ambronn (1896), Frey (1925), Ambronn and Frey (1926, p. 176-185), and McGraw-Hill (1992). A particular application of that technique will be introduced in section 35.2; in recent years it has also been employed in combination with liquid crystals in digital and television displays.

For some decades, biologists were not quite happy (see Ebner 1892) with the polarizing microscopes on the market, which was dominated by petrographers. Eventually, the Zeiss company offered some accessories for their benefit, upon the advice of the physiologist T. Engelmann (Siedentopf 1902). The Leitz workshop sold Nicol- prism arrangements that could be fitted to ordinary biological microscopes (Schmidt 1924, Fig. 29-23). Later, Schmidt (1925) persuaded Leitz to produce a specially designed polarizing microscope for biologists. It was to some extent simpler than the petrographic models, but contained a type of analyzing prism (see Ehringhaus 1920) which improved the resolution of delicate features. Without doubt, these instruments were not only valuable when studying modern tissues, but also in microscopic paleontology. One example would be in oil exploration, where the fossilized remains of organisms in ocean sediments can reveal much about their age and economic potential.

In publications from even before 1900, many instances may be found where polarizing microscopes were essential in studies of crystallization (see sections 27.2 and 29.1). They could also aid in recognizing materials which were only available to the scientist in very small quantities. Among those contributing to the development of "microchemical" techniques were Reinsch (1881), Haushofer (1883), Behrens (1891; Behrens-Kley 1915) who asserts that polarizing prisms are indispensable for such work, and Pozzi-Escot (1900). Emich's (1911) book on the subject gives many examples of polarization techniques in the microscopic identification of compounds. Emich (1916) also points out that small-scale polarimetric observations were of great value to E. Fischer (see Fischer 1911, and Appendix 5) in his research on polypeptides. E.M. Chamot designed a simple microscope with Nicol prisms for chemists, produced by Bausch & Lomb from 1899 to the early 1930s. See Chamot's (1915, 1921) book on these microscopes. Among optional accessories were a 10-cm. tube which could be inserted into them for approximate measurements of optical activity in liquids, and an electrically heated stage (Fig. 29-23). Books by Johannsen (1914, chapter XL), Rosenbusch (1924, chapter on microchemical reactions p. 742-761) and Hartshorne and Stuart (1950, p. 422-433) explain the use of polarizing microscopes in chemical analysis.

30 New magnetic and electrical effects on light, 1896-1925

30.1 The Zeeman effect, 1896-1910

In the wake of the discoveries of magnetic effects on light made by M. Faraday and later by J. Kerr, it may be assumed that many people searched for influences of magnetic fields on radiation processes. In 1896, P. Zeeman who had in fact been making experiments on the magnetic Kerr effect, looked carefully at the spectral lines of light from hot sodium vapor (i.e. a flame charged with sodium salt) in a strong magnetic field. Using a high-quality diffraction grating from H.A. Rowland, he noted (Zeeman 1897a) a slight widening of the lines which "…made it likely that a real magneto-optical effect was being observed. This became certain when polarization features were seen to be connected with the widening…" (Zeeman and Bruin 1927). Here Zeeman is referring to the fact that his compatriot H.A. Lorentz had then recently put forward some considerations on the nature of electrical charges in matter, based on Maxwell's theories. According to Lorentz' ideas, the spectral lines of light emitted in a magnetic field would be split into two or three components respectively, depending on whether the light was being observed along the magnetic field lines or at right angles to the field. It the former case they would be circularly polarized, in the latter linearly polarized. Zeeman (1897a,b) was able to confirm this to a certain extent, and others including Lorentz (1898) himself also studied the polarization of the split spectral lines. The sense of rotation in the circularly polarized components showed that the light emanated from negatively charged particles, presumably electrons. Similar changes occurred in the absorption spectra of metallic vapors.

The change Δf in frequency caused by a magnetic field B was proportional to its intensity. Lorentz' (1897) analysis in fact led to the simple formula $\Delta f = \pm(e/m)B/4\pi$ where e/m is the charge-to-mass ratio of the emitting oscillators. From Zeeman's measurements on line spectra, a very important conclusion could thus be drawn: in the radiation of light from hot atoms, the particles involved had in most cases e/m of a similar magnitude as those which conducted electricity in rarefied gases. In some instances (the so-called normal Zeeman effect), the derived e/m even agreed reasonably with the value found by J.J. Thomson and others in 1897-98 for electrons in deflection experiments on cathode rays. This soon generated much new research activity in related subjects. See the book by Drude (1900a, p. 410) who also points out that the e/m ratio for hydrogen ions (obtained from electrolysis) is of the order of 2000 times less than for electrons.

Becquerel (1897) proposed a hypothesis on certain relations between the Faraday effect and the Zeeman effect, and his formulas could be used for estimating e/m from the Faraday effect. The result however tended to be lower than expected, see a paper by C.G. Darwin and W.H. Watson in Proc. Royal Soc. A114, 1927. Larmor (1900, p. 341-356) deduced general theorems on the move-

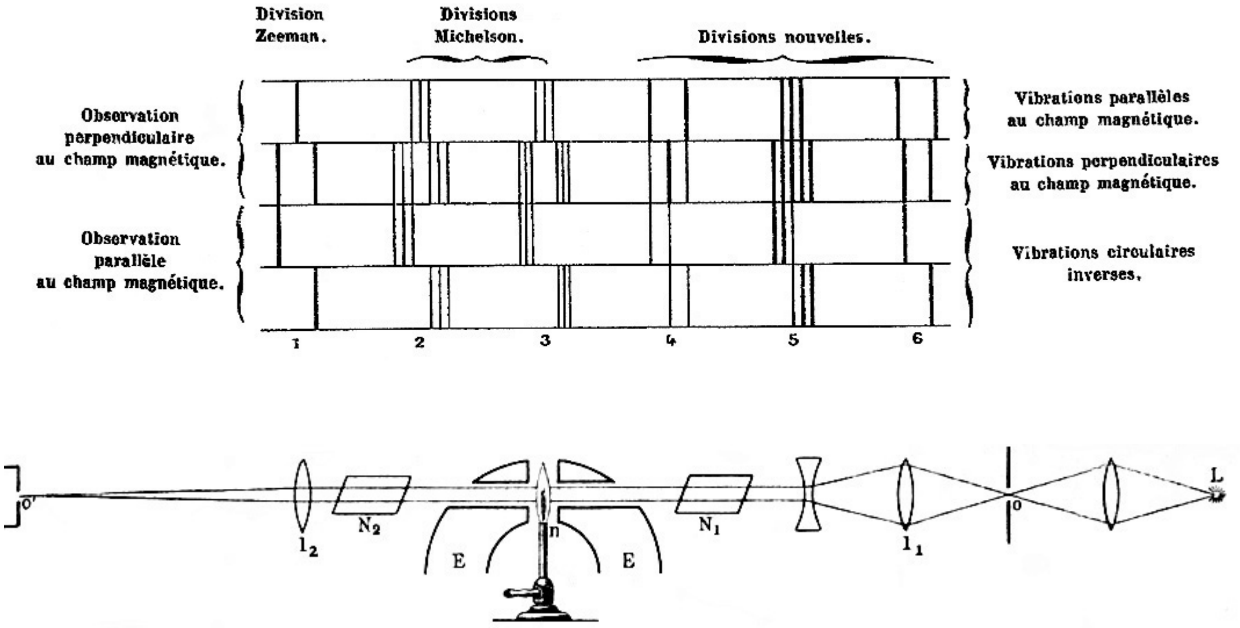

Figure 30-1. *Top:* Becquerel and Deslandres (1898) photographed spectral lines from incandescent vapors of iron and other metals in a magnetic field through "un beau rhomboèdre de spath d'Islande". On the left we see the simple (normal triplet) Zeeman splitting of spectral lines, while the others are more complex patterns found by A.A. Michelson and the authors. *Bottom:* A sodium flame in a magnetic field, for research on the Zeeman effect (Macaluso and Corbino 1898). Considerable rotation of the plane of polarization occurs in polarized sodium light on passing through the flame (here, towards the left). The diagram is from Lummer (1909).

ment of charged particles in magnetic field, which went farther than Lorentz' theory in explaining the frequency changes and polarization of light in the Zeeman effect. Later, Larmor's theorems also became important as a theoretical model for diamagnetism in materials. With more powerful magnets, sensitive spectral analysis by interference techniques, and reduction of the temperature in the emitting vapors (see e.g. Becquerel and Deslandres 1898, Fig. 30-1; Michelson 1897, 1898) it was soon realized that the Zeeman effect in the minority of cases split spectral lines into the expected two or three components; they could also be four, six or nine, and often of different intensities. This was called "the anomalous Zeeman effect". Nicol prisms (Michelson 1898, Reese 1900, Baeyer and Gehrcke 1909, etc.), Iceland spar rhombs (e.g. Runge and Paschen 1902) or other polarizers (Lorentz 1898, Preston 1899) were useful in ascertaining the state of polarization of the various component lines. It was found that they could always be divided into three groups having different characteristics. Zeeman (1909) demonstrated with the aid of the method of Fizeau and Foucault (1845) that the orbits of electrons in atoms were very close to being of circular shape.

It must be stressed here that all this happened before E. Rutherford's 1911 demonstration of the nature of atoms in collision experiments. Bohr (1922) states that the results of Zeeman and Lorentz were "generally accepted as a most convincing proof of the electronic theory of matter, and…established beyond doubt that the origin of these spectra is to be found in the motion of electrons within atoms.". See Appendix 5.

One of the interference spectroscopes employed in the early 20th century to resolve the Zeeman multiplets, was based on total reflection of light inside a thick polished plate of glass or quartz (Lummer and Gehrcke 1902, 1903; Fig. 30-2). Its resolution performance could be enhanced if the incident light was made linearly polarized with a Nicol prism before entering the plate, but this was not always needed. The plate and other forms of interference spectroscopes were also used in studies of the fine structure (and later hyperfine structure) of spectral lines. See for instance the analysis by Galli and Försterling (1917) of ultraviolet lines of mercury with a Lummer-Gehrcke

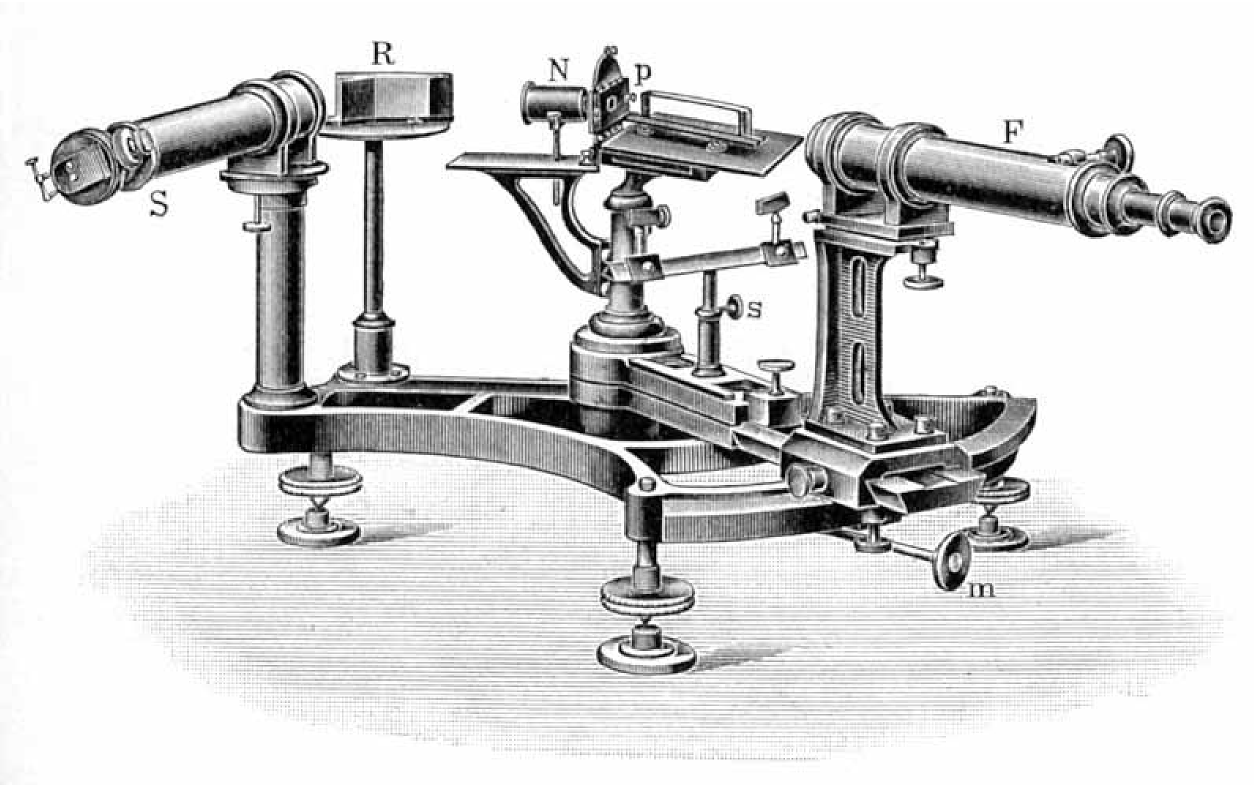

Figure 30-2. Research on the Zeeman effect called for both strong magnetic fields and improved resolution of spectra. One novel device of high dispersion consisted simply of a glass or quartz plate with precisely parallel polished surfaces, invented by Lummer and Gehrcke (1902). It is seen here to the left of p, accompanied by a glass prism R for selecting the wavelength interval (of light from the source S) to be expanded. N is a Nicol prism whose function was to sharpen the components of the spectral lines. From Lummer (1909).

plate and a Nicol prism, by Hansen (1925) of the Balmer lines of hydrogen, by Schrammen (1927) of hyperfine structure in cadmium spectral lines, and by Stauffer (1930) of the spectrum of a chopped light beam, Fig. 38-2. The fine structure of spectra has always been very important in tests of hypotheses on the nature of atoms.

One experiment related to the Zeeman effect which created much interest was that of Macaluso and Corbino (1898, Fig. 30-1) where hot sodium vapor in a magnetic field exhibited strong optical activity if the frequency of light sent along the field direction was close to that of sodium's yellow spectral lines. Voigt (1898) presented a theory of these observations which is still valid (Budker et al. 2002), also pointing out relations between the Faraday and Zeeman effects. "Zeeman's discovery and further work connected to it has caused great excitement in the world of physics" according to the editors of the Physikalische Zeitschrift, in a brief introduction to a review paper by Voigt (1899-1900). See more in sections 30.2 and 39.3. In another review, Cotton (1899) emphasizes the value of the Zeeman effect for enhanced understanding of the fundamental laws of light-matter interaction. This effect, including its polarization aspects, was very useful in the coming years, for instance when the many spectral lines of the elements were being grouped into different series (Preston 1899, Runge and Paschen 1902).

In the normal Zeeman effect which is rather rare and was first studied closely around 1907, the frequency changes in a magnetic field agreed precisely with the theoretical predictions of Lorentz. By 1910, experimental techniques had progressed so much that determinations of e/m for electrons from Zeeman triplets in light from helium and some metals (Weiss and Cotton 1907, Gmelin 1909, and others cf. Paschen and Back 1912, p. 897) gave a more accurate value than experiments using J.J. Thomson's method mentioned above. Weiss and Cotton used an "analyzer", probably a

Nicol prism, to improve resolution of the spectral lines, and so did also subsequent observers such as Babcock (1923) in more extensive measurements of e/m. Scientists appended various ad hoc conditions to the Lorentz theory in attempts to explain the anomalous Zeeman effect.

G.E. Hale (1908) published results from measurements on frequency shifts and (using Nicol prisms) polarization of the light emitted from sunspots. They revealed the presence of strong magnetic fields around the spots, and according to Dictionary of Scientific Biography (1980-90) this was considered to be the most important step forward in our knowledge of sunspots since the 17th century. With improved instrumentation it was later found (Hale 1913) that the sun as a whole has a magnetic field which at its surface is about a hundred times stronger than that of the earth. Around 1914 Hale and his collaborators had found that changes were taking place in the magnetic field of the sunspots (see Hale's biography by H. Wright, 1966) and that they often occurred in pairs where one was a north magnetic pole and the other a south pole. In 1918-19 they established that the fields of sun spots as well as the main field of the sun changed their polarity at 11-year intervals (see e.g. Hale and Nicholson 1925). All this had great influence on research in astrophysics and solar-terrestrial relations.

In connection with research on the Zeeman effect, as well as in some other fields (such as the use of polarization spectrophotometers), properties of diffraction gratings had to be looked into. This was because a grating may alter the polarization state of light in the spectra that it resolves. See for instance the paper by Ingersoll (1920) who reviews previous work on this aspect.

30.2 More on the Zeeman effect and other magneto- and electro-optical effects connected with polarization, 1900-25

In addition to the Zeeman effect just described, a number of different effects of magnetic and electric effects upon light in materials have been discovered, investigated, and utilized. The Faraday magnetic effect, the Kerr electric and magnetic effects, and the Pockels electric effect have already been mentioned above.

Before 1890 it was known that in the Faraday effect and the Kerr electric effect it took the molecules in material samples less than 0.1 millisecond to respond to externally applied fields. Abraham and Lemoine (1900, Fig. 30-3) demonstrated that in the latter the time lag was only a small fraction of a microsecond. At the turn of the century, practical applications of these effects had also appeared. As an example, one may place a substance having a strong Faraday effect (such as CS_2, enclosed in a tube) between two crossed Nicol prisms. A light ray cannot pass through this setup until a magnetic field is switched on around the tube. This was used e.g. in measuring the speed of artillery projectiles (Crehore and Squier 1895, Fig. 30-3) and in estimating the properties of oscillating currents (Pionchon 1895, Abraham and Buisson 1897, Federico and Baccei 1899). Tauern (1910, Fig. 30-3) studied the double refraction in glass due to electric fields with great precision, as it was by then possible to detect changes in the phase angle of light to 1/2000th of a wavelength. He considered it possible that the Kerr effect might be employed in the measurement of high voltages. In fact, Pockels (1899) had already tested such a device (with two Nicol prisms) using the Pockels effect in quartz, and H. Becquerel suggested in 1884 utilizing the Faraday effect in measuring currents. Similar ideas also cropped up later, but they have only been put into practice in some very specific cases. See more on the Kerr effect in chapter 38.

The Majorana (1902) effect appears as double refraction in colloidal suspensions of magnetic materials when in a magnetic field. It was investigated during the following years by Cotton and Mouton (1905, 1907a), G. Meslin, A. Schmauss, and J. Chaudier. The Cotton-Mouton effect (Cotton and Mouton 1907b, Fig. 30-4) is another magnetic phenomenon, analogous to the Kerr

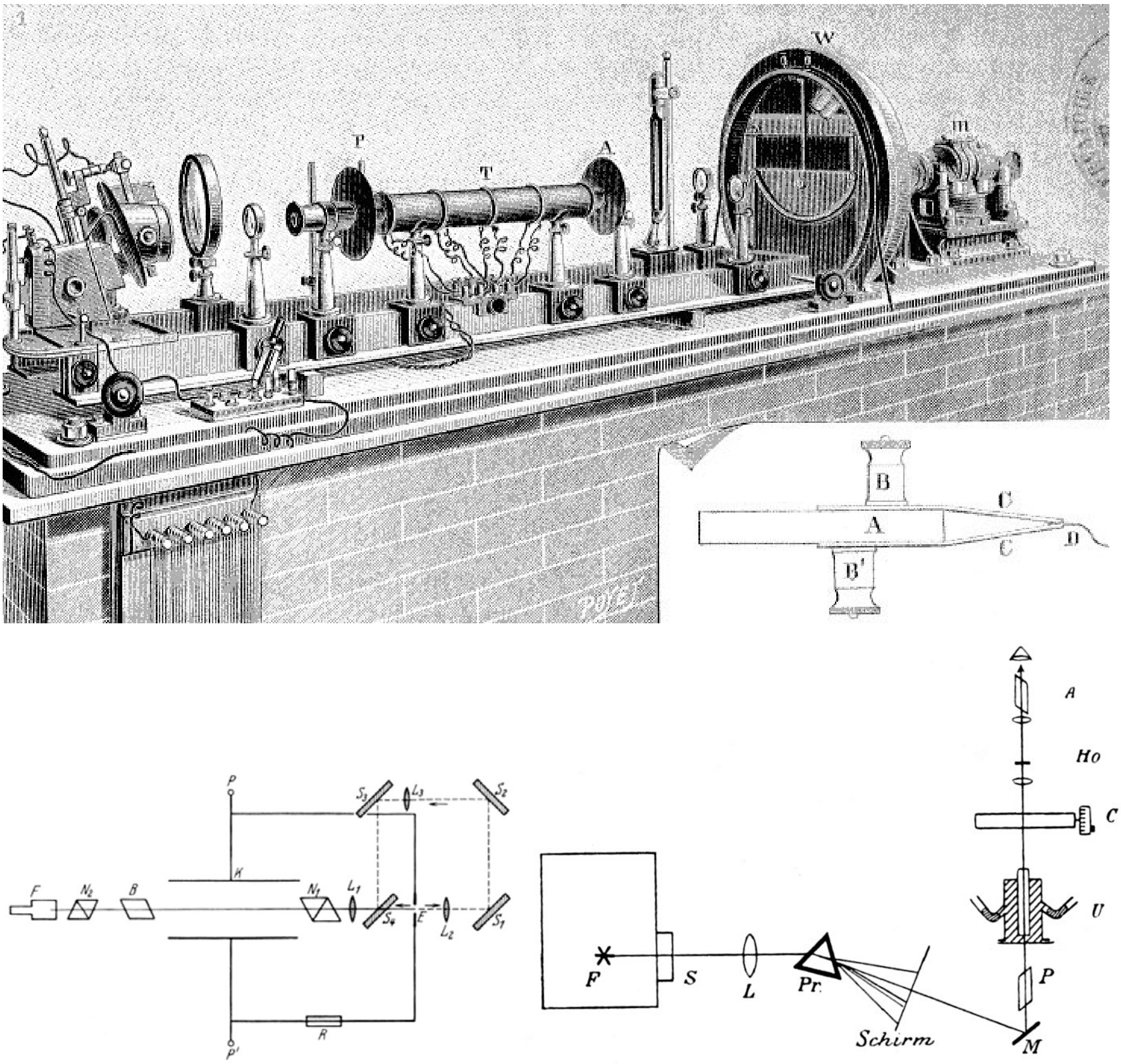

Figure 30-3. The Kerr electro-optical effect. *Top:* Measurements by Crehore and Squier (1895) of the speed of cannon projectiles. To begin with, no light from a lamp at the far left passes through the analyzer prism A which is perpendicular to the polarizer P. When the projectile starts moving, it switches on a high voltage across a capacitor in the tube T, causing a liquid between the capacitor plates to become doubly refracting. A narrow beam of light then traverses A and falls on a photographic plate at W. A motor m rotates this plate at a known constant speed. The projectile switches off the voltage after travelling a known distance. The illustration is from La Nature. *Bottom left:* The experiment of Abraham and Lemoine (1900) which showed that the Kerr effect (in a liquid between the capacitor plates K) is established in about 10^{-8} sec. This made it possible to utilize the effect for measuring e.g. the speed of light and very short lifetimes of fluorescence. Diagram from Born (1933). *Right:* Tauern's (1910) research on the Kerr effect in glass and CS_2 at various light wavelengths. The samples are in the vessel U.

electro-optical effect. It causes pure liquids to be slightly birefringent in magnetic fields, especially if the shape of their molecules is non-spherical. A theoretical treatment of both effects was presented by Langevin (1910). Cotton and Mouton (1913) pointed out that their effect could be of use in studies of the nature of organic molecules. The same kind of effect in gases is named after W. Voigt.

The Stark effect is the splitting of spectral lines into several components when the emitter is in an electric field. Many futile attempts had been made at finding such an effect, when J. Stark

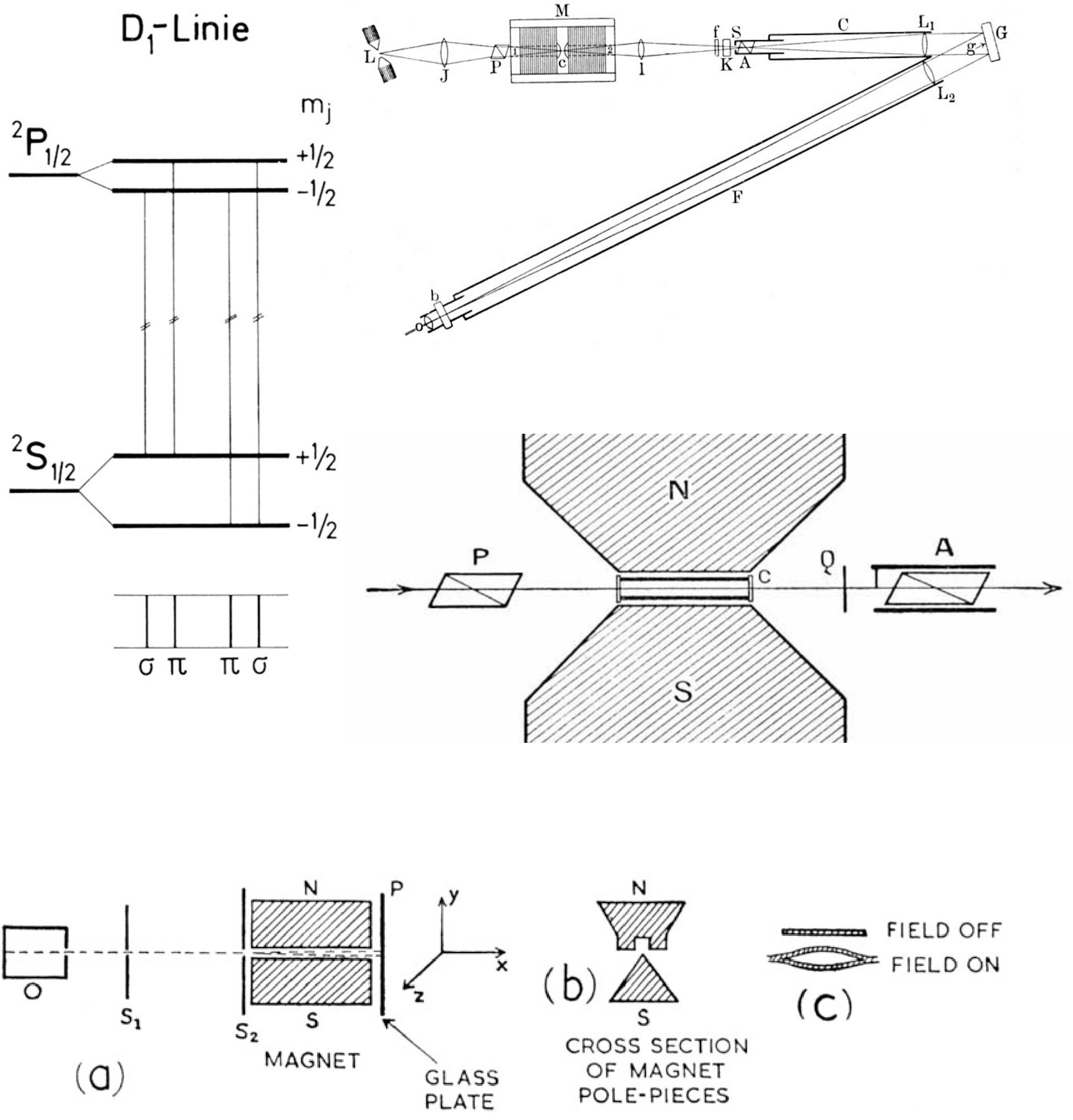

Figure 30-4. On the Zeeman effect and other interactions between magnetic fields and matter. *Left:* This schematic diagram shows how two of the permitted energy levels of a free sodium atom are split when it is in a magnetic field. At the bottom of the diagram it is indicated that two spectral lines (emitted in transitions between the split levels) are seen when one looks at light-emitting sodium along field lines (π) and another two are seen at right angles to the field lines (σ). From Haken-Wolf: Atom- und Quantenphysik, 1990. *Right:* The diagram at the top illustrates one of the many experiments which tested various theories about the Zeeman effect (Geiger 1907). G is a diffraction grating for detailed spectral analysis of the polarized light which has passed through a metal vapor in a magnetic field at c. *Below* is the setup of Cotton and Mouton (1905, 1907a,b) for measuring the double refraction of certain liquids in a magnetic field. It includes a compensator Q and a half-shadow prism A. From Bruhat (1942). *Bottom:* The experiment of Gerlach and Stern (1922), prompted by considerations of the Zeeman effect. Silver atoms, emitted from an oven (left), pass through an elongated evacuated volume where an inhomogeneous magnetic field pulls them to one side or the other. The fact that they form distinct stripes on the glass plate P, is evidence for the quantization of their magnetic moments. From Yarwood (1963).

(1913, and A. Lo Surdo soon after) demonstrated it in the case of hydrogen and helium. Stark's equipment could produce fields of the order of 100,000 V/cm; see Appendix 5. The light has different polarization depending on the direction of observation relative to that of the field. Epstein (1916) provided an explanation of both the frequency shifts and the polarization in terms of the quantum hypothesis, concluding that the effect provides a "convincing proof of the correctness of Bohr's model of the atom". Bruhat (1942) agrees that the derivation by Epstein (and independently by K. Schwarzschild in the same year) had been "one of the first successes of the quantum theories". Further theoretical work by Rubinowicz (1918, 1921) showed that the emission of circularly polarized light corresponds to a change of ±1 in the so-called magnetic quantum number of the atom, whereas the emission of linearly polarized light leaves this number unchanged. This expresses in fact the conservation of total angular momentum. The Stark effect has generally been given less attention by physicists than the Zeeman effect; G. Herzberg's 1937 book on atomic spectra even claims that it is "of no particular value as a help in the analysis of a spectrum". However, it has played a notable role in modern research on the topics like the genesis of molecules, widening of spectral lines, ionization, and electrical susceptibility of materials.

Many aspects of the Zeeman effect were studied experimentally up to the 1920s, by A. Righi, C. Runge, R.W. Wood, and J. Becquerel, to name a few. Examples include the research of Wood (1905b), Geiger (1907, Fig. 30-4) and Ladenburg (1912; see D.S.B.) on the Faraday effect in incandescent vapors of elements. These experiments continued the work of Macaluso and Corbino (1898) on the Zeeman effect, mentioned in the preceding section. Their purpose was to discriminate between different theories on the motions of electrons in atoms, although the interpretation of the results was somewhat uncertain. A new stage in understanding of the Zeeman effect was reached when Paschen and Back (1912) demonstrated that the anomalous effect resembled the normal effect more and more as the intensity of the magnetic field at the light emitter was increased. A further stage was reached with papers by A. Landé (e.g., 1921) in the early 1920s, where he among other things connects the polarization observed in the Zeeman effect, to those transitions between energy levels that are allowed by the rules of the quantum theory (Fig. 30-4). To quote Born (1933, p. 459): "Landé was the first to base a quantum-theoretical description of the Zeeman splitting on experimental facts. This provided one of the most important building blocks for the framework of quantum mechanics and for its application to atomic structure.". See also the review paper by Zeeman and Bruin (1927).

The Faraday magneto-optical effect was studied further in 1900-25, both experimentally and theoretically. Borel (1903) measured the Faraday effect in quartz in the visual and near-ultraviolet range, and suggested an improved formula for its dispersion (i.e. dependence on wavelength). Disch (1903) claimed to have confirmed a relation proposed by Wiedemann (1851) about a close correspondence between the natural and magnetic dispersions in optically active materials. However, Lowry (1913b and later) using spectral lines from lithium, mercury and cadmium as well as sodium, found exceptions from this "Wiedemann's law". Ingersoll (1917) extended Lowry's dispersion studies to the infrared. Lowry also improved the methods applied by W.H. Perkin (Chapter 23) in his Faraday-effect measurements on organic compounds. J. Becquerel (1909, and many other papers) carried out extensive research on the Faraday effect and associated absorption of light in certain minerals at very low temperatures. This culminated in 1939 in the discovery of a new type of magnetic interactions, called metamagnetism.

Chaumont (1915) and Bergholm (1916) investigated the Kerr electro-optical effect in detail with new instrumentation (Fig. 30-5), and Szivessy (1924) measured the Kerr electro-optical effect in gases. Observations of this kind have been useful in research on the structure of atoms, molecules, liquids and/or solids; in particular, Tomaschek (1934, p. 362) claims that the Kerr electro-optical effect is a "very important tool" for such research. Weiss (1907) proposed the

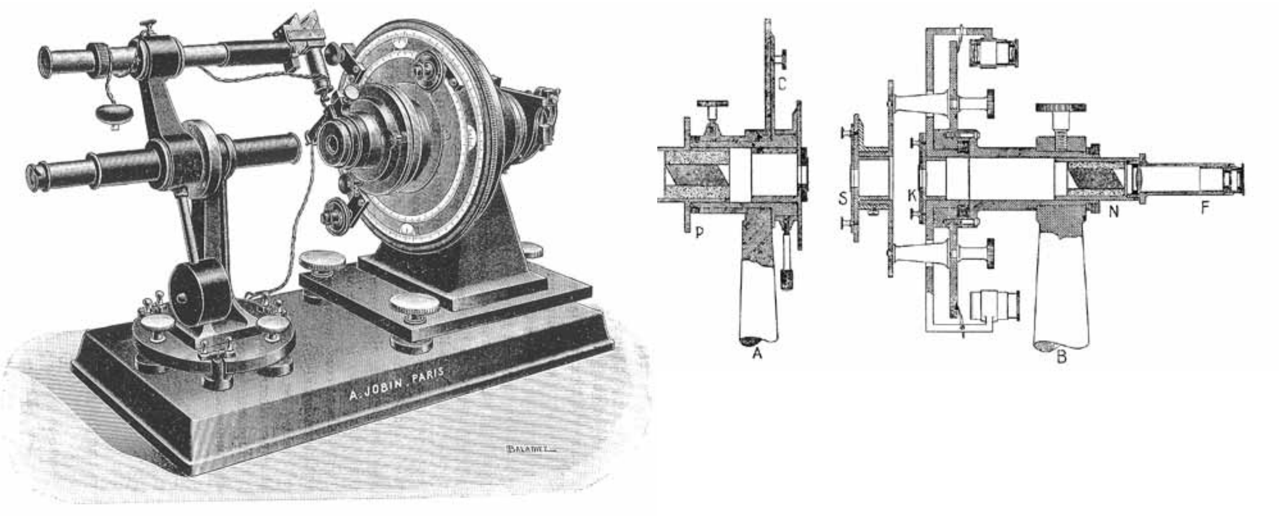

Figure 30-5. *Left:* The specially designed equipment of Chaumont (1915), containing Nicol prisms and thin plates of quartz and mica, for investigations of the Kerr electro-optical effect. *Right:* A part of Bergholm's (1916) instrumentation for studying the temperature dependence of the Kerr effect in various liquids. Light arrives from the left through a sample at S, between the Nicol prisms P and N.

existence of very strong magnetic fields (champs moléculaires, ~100 Tesla) of unknown origin inside ferromagnetic materials. In his paper he quotes among other things evidence for such fields, inferred by Du Bois (1890) from the Kerr magneto-optical effect. Weiss‘s ad-hoc fields remained for a long time a key concept in research on ferromagnetism; they turned out to be manifestations of quantum-mechanical interactions derived theoretically by W. Heisenberg in 1928.

One more major step towards full understanding of the laws of quantum theory was taken by the experiments of Gerlach and Stern (1922, etc.) which were prompted by the Zeeman effect (cf. e.g., Yarwood 1963). These authors showed that the magnetic moments of atoms in silver vapor had discrete values, see the bottom part of Fig. 30-4 and Appendix 5. The moments could be presumed to belong to silver's single valency electron. We shall return to these matters in section 39.3.

31 Motion relative to the aether, c. 1860-1915

The earth's speed in its orbit around the sun is about 30 km/sec, whereas the speed of a point on the equator due to the earth´s rotation is less than 0.5 km/sec. The former is 1/10,000 of the speed of light, and causes the direction to the pole star to vary a little with the season. This effect, called aberration, was known since around 1730.

During the time when scientists still believed in a material aether that pervaded the universe, they were keen to find out whether the speed of any point on the earth with respect to the aether could be measured in the laboratory. A. Fresnel had predicted that a moving object "dragged" the aether along with it, and H. Fizeau confirmed this prediction in 1851 by measuring the speed of light in flowing water. Fizeau (1860) then carried out extensive measurements to test whether the earth´s orbital motion affected the direction of the plane of polarization of light travelling through a pile of tilted glass plates. Fizeau's results, while not conclusive, seemed to indicate some motion relative to the aether. In the year 1870, the French Academy of Sciences announced a prize for new optical discoveries concerning this subject. The prize was awarded to E. Mascart for a series of detailed experiments (Mascart 1872, 1874, see C.R. 79, p. 1531-1534, 1874). One of the experiments tested whether the earth's motion affected the double refraction in Iceland spar, and another one (Fig. 31-1) tested its effects on the optical activity of quartz. Mascart however concluded from his observations that it was impossible to find the speed of the earth through the aether. At a similar time, E. Ketteler (1872) published theoretical papers on the effect of the earth's speed on double refraction and other optical phenomena. These were expanded in a book (Ketteler 1873) which included a description of the work of Fizeau and of Mascart on these matters. Ketteler himself also made two experiments to measure the aether speed. In one of these he employed a train of four specially constructed 90° totally-reflecting Iceland spar prisms, yielding a result for the speed of less than 1/18th of the expected value. In Ketteler's other experiment where six such spar prisms were used, it was anticipated that certain images observed in a small telescope would move laterally when the setup was rotated through 180° at noon, but not the slightest translation was perceived.

In the following decades various further attempts were made at estimating motion with respect to the aether, using mechanical methods, electric or magnetic fields, or radiation. All gave negative or unsatisfactory results and they have been forgotten, with a single exception published in 1887. This very comprehensive experiment which was carried out by A.A. Michelson and E.W. Morley, was based on an original suggestion by J. C. Maxwell (see entry on him in D.S.B.) and employed Michelson's very sensitive interferometer. The back-and-forth speed of light in vacuum in two perpendicular directions was compared, and found to be invariant. This result caused much discussion for many years (see e.g. Preston 1895, and the entry on G.F. FitzGerald in D.S.B.), and additional measurements of that type were carried out by for instance Morley and D.C. Miller in 1904.

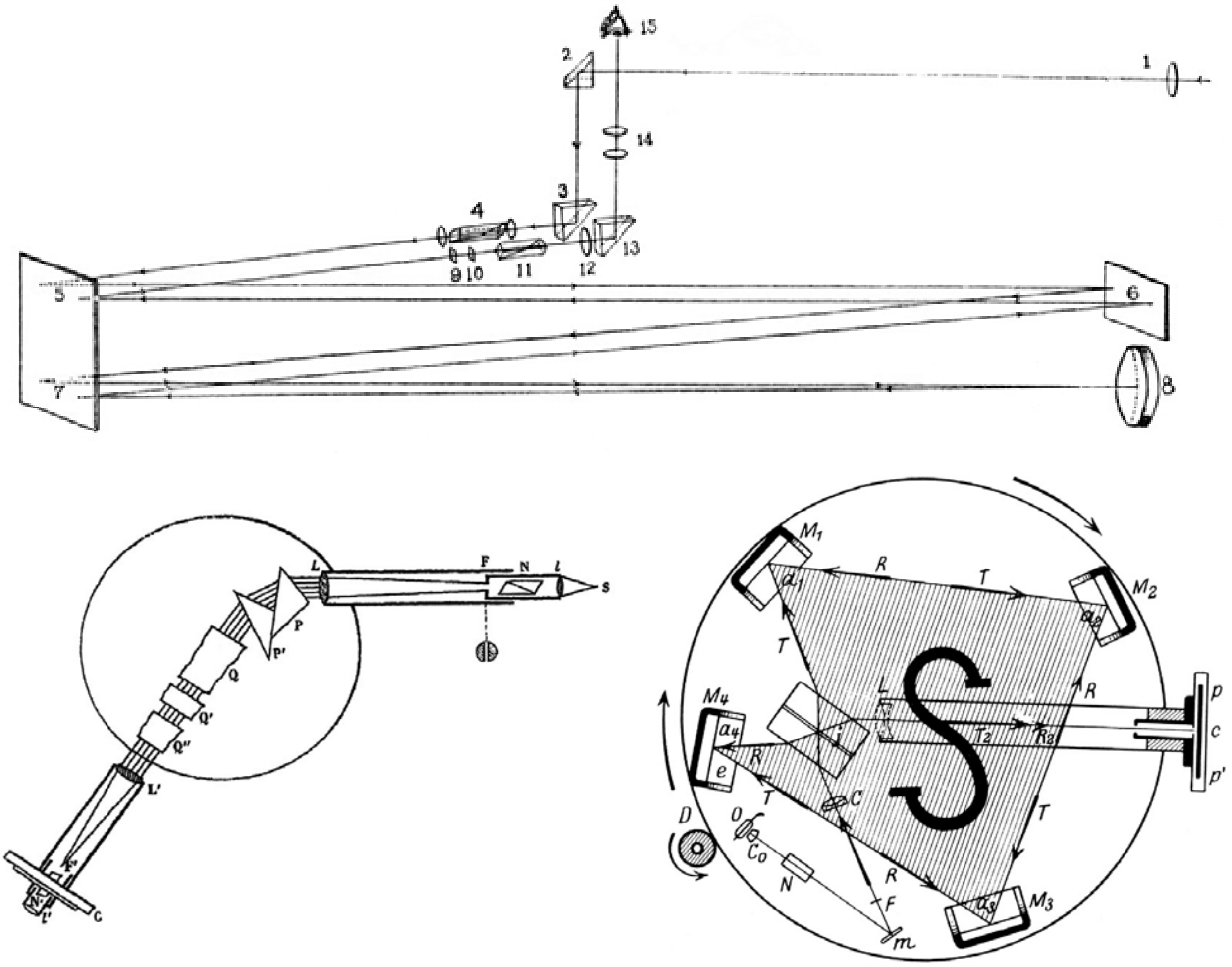

Figure 31-1. Three experiments concerning movement of the Earth relative to the luminiferous aether. *Top:* Brace (1904b) sent a light beam back and forth in a 4-m long water-filled trough. He attempted to find evidence of double refraction in the water, caused by the contraction (in the direction of the Earth's velocity) suggested by H.A. Lorentz and G.F. FitzGerald. Objects no. 4 and 11 are Nicol prisms. *Bottom left:* One of Mascart's (1872) aether-drift experiments which were rewarded by an Academy of Sciences prize. Here he is looking for the influence of the Earth's motion on the rotation of the plane of polarization of light (emitted by s) in the quartz blocks QQ'Q''. The view is from above; there are Nicol prisms at both ends of the light path. *Right:* The vessel S which is viewed from above and is about 0.5 m across, rotates. Sagnac (1913) investigated whether a light ray travelling with the rotation had a higher velocity than a ray moving the other way around. The Nicol prism N is used to equalize the intensities of the rays before they enter the interferometer at M_4. From Wien-Harms (1928).

At the turn of the century, considerations by FitzGerald, H.A. Lorentz and others (see van Nostrand 1989) of the laws of mechanics in the light of Maxwell's electromagnetic theory, suggested that moving objects were bound to contract in the direction of motion. In this way, Lorentz could among other things explain why Mascart's experiments had not indicated any earth-aether motion. Subsequently, experiments were set up by Rayleigh (1902b) and by Brace (1904b) to find out whether such a contraction caused double refraction in transparent materials, analogous to that caused by pressure (section 27.3). It is estimated that the latter's apparatus (Fig. 31-1) was 300 times more sensitive than that of Michelson and Morley, but no effects from the earth's orbital motion were detected.

Rayleigh (1902a) and Brace (1905b) also carried out other experiments on the aether motion, employing polarized light. These tested whether the motion had an effect on optical activity in quartz or in oil. Rayleigh's experiment, which resembled one of Mascart's (1872, 1874), made use of thick quartz blocks which rotated the plane of polarization of yellow light by more than 5000°. Brace (1905c) then repeated the experiment of Fizeau mentioned early in this section, with much improved techniques. The results continued to be negative: the properties of a light ray in space were quite independent of its direction of propagation. These experiments were discussed by many physicists, e.g. Larmor (1904).

At this point, Albert Einstein entered the scene. It may be pointed out here that his earliest surviving scientific essay, written in 1895 while he was a college student, deals with light transmission through magnetized matter: here he mentions double refraction and polarized waves. The essay is reproduced in vol. 1 of Princeton University's edition of Einstein's collected works, 1987. In an 1899 letter, Einstein mentions that he has read the paper by W. Wien (1898) which lists some 13 aether-speed experiments including the polarized-light ones of Fizeau and Mascart.

In Einstein's (1905b) famous first paper on his theory of relativity, he does not quote any previous papers, but he considers that "…the lack of success in attempts to establish a motion of the earth relative to the "light medium", leads to the assumption that the concept of absolute rest… does not fit the observations". It is quite possible that Einstein was here referring for instance to the very recent experiments by Rayleigh and by Brace on polarized light, along with the older observations of Michelson and Morley which used unpolarized light. However, in those later articles by Einstein and interviews with him which discuss the origins of his relativity theory, he only mentions the Michelson-Morley experiment. As it was later put by P.A.M. Dirac, Einstein's theory "destroyed the aether" but it took a long while to gain acceptance, and various aether-drift experiments were conducted up to 1930 at least. Among those where polarized light played a part, was a further improvement by Strasser (1907) of the Fizeau-Brace observations. Kennedy (1922) set up an optical experiment with a Wollaston prism and four Nicol prisms for the same purpose, and he later carried out one with simplified apparatus (Kennedy 1928), however still requiring polarized light.

Sagnac (1913) made noteworthy measurements of the angular velocity of a rotating object. With an interferometer, he observed how much faster a light beam going against the rotation travelled around a circular path inside the object than a beam going with the rotation. This experiment (Fig. 31-1) where a Nicol prism plays a minor role, was for a long time involved in discussions of the aether and of the relativity theory, but in fact its outcome had no bearing on that theory. The "Sagnac effect" has had important uses in positioning techniques in recent years.

One more instance where the paths of Albert Einstein and Iceland spar happened to cross, was at Princeton University where R.A. Beth (1936) designed a very sensitive experiment to measure the angular momentum of circularly polarized light. In his apparatus, a light ray polarized by a large Nicol prism impinged on thin quartz plates suspended in a very fine fiber. In a footnote, Beth thanks Einstein for their several interesting discussions on the equipment, and for assistance in correcting an error in an older theoretical paper on the matter. According to later accounts, Beth's results had some fundamental significance.

Finally, two points regarding the relativity theory must be stressed here. One is that the theory owes its appearance to Maxwell's electromagnetism and its general recognition by 1900. At that time it had also been realized that Maxwell's field equations were incompatible with Newton's mechanics, and the relativity theory was one of the suggested ways to resolve that problem. As has been shown in the present compilation, polarized light was a factor all through this story, beginning with the Faraday effect. The other point is that one consequence of the relativity theory is the equation $E = mc^2$, which Einstein derived in a separate paper in late 1905. At that time, scientists were giving much thought to the source of the energy released in the radioactivity of some elements, and also to the source of the energy radiated by the sun and stars. This equation might possibly have been derived without the relativity theory, for instance from measurements of atomic masses of radioactive mother and daughter elements along with the energy of emitted particles. However, this would hardly have happened until long after 1905. Einstein's mass-energy equation clearly guided scientists in their research on atomic transmutations, including nuclear fission from around 1940 onwards, and in the applications of fission for military and civilian purposes.

32 The Helgustadir quarry in 1895-1910, and the supply of Iceland spar

After the quarry at Helgustadir had been dormant for a decade, the government leased its operation to Carl D. and his son Thor E. Tulinius, initially for five years from mid-1895. They also handled export sales of the product through the latter's commercial company in Copenhagen (set up in 1889). According to Gratacap (1907), very pure crystals were also sold to travellers in Eskifjördur at about a dollar per ounce. The contract was extended twice for five years, i.e. to 1910. A biography of Thor E. by Gils Gudmundsson may be found in the compilation "Their settu svip á öldina" (They made their mark on the 20th century, vol. I, p. 304-317), published in Reykjavik in 1987. Carl D. Tulinius died in 1905. The company was required to deliver balance sheets on the finances of the operation and on its stock situation at the end of each calendar year; several of these are preserved in the files of the National Archive (Fig. 32-1). The spar crystals were sorted into three categories, A+B, C, and D, as well as inferior pieces for museums only and for (unspecified) manufacturing use. I have not seen the detailed criteria that were applied, but B probably covered small perfect crystals and/or large slightly defective ones. C was "secunda", i.e. clear pieces not fit for optical use (Kirk 1897). Annual sales from the A+B class amounted to 100-250 pounds (1 pound = 0.5 kg), while less was sold from the other two. Prices clearly kept rising, at least to 1908. The revenue delivered to the state, after deduction of all costs, seems to have been around 2000 kr. per year on average. This sum is also quoted by Ussing (1902) who mentions that ten workers are usually hired in the summer months. For comparison, the very first engine in an Icelandic rowboat (in 1902) cost 900 kr. including its installation.

A number of users of Iceland spar continued complaining about its scarcity, as may be seen in Appendix 1A. However, some clearly had access to a supply, for selling or for making prisms to incorporate in optical equipment. It is probable that they had managed to build up their own stocks during the time when plenty of spar was available. For instance I have acquired an undated catalog from the optical workshop of Bernhard Halle (c. 1895, Fig. 32-2) of Steglitz near Berlin. This firm offers some 30 sizes and modifications of Nicol prisms plus other polarizing prisms, polished rhombohedra, spheres, lenses and plates from Iceland spar, altogether about 200 different products. The catalog of Pellin (1899) similarly contains Nicol prisms, rhombs, equilateral dispersing prisms and lenses of various shapes and sizes from Iceland spar for research and teaching. Equipment suppliers like Société Centrale (1891), Leybold (c. 1900), F. Ernecke, and C. Gerhardt also offered this sort of materials around 1900. Steeg & Reuter (1914) sell Nicol prisms and Iceland spar pieces in literally hundreds of shapes and sizes; they had already advertised a selection of these at the end of Groth's (1905) book on physical crystallography. Porter (1907) sells several types of Nicol prisms up to 4.5 cm long, lenses, dispersing prisms, beam-splitting prisms, rhombs, plates and spheres of spar. Many other suppliers offer more limited selections (e.g. Central Scientific Co. 1909, 1912, Baird & Tatlock 1912). Advertisements and descriptive papers on polarizing microscopes and related apparatus kept appearing from producers like R. Fuess (Leiss

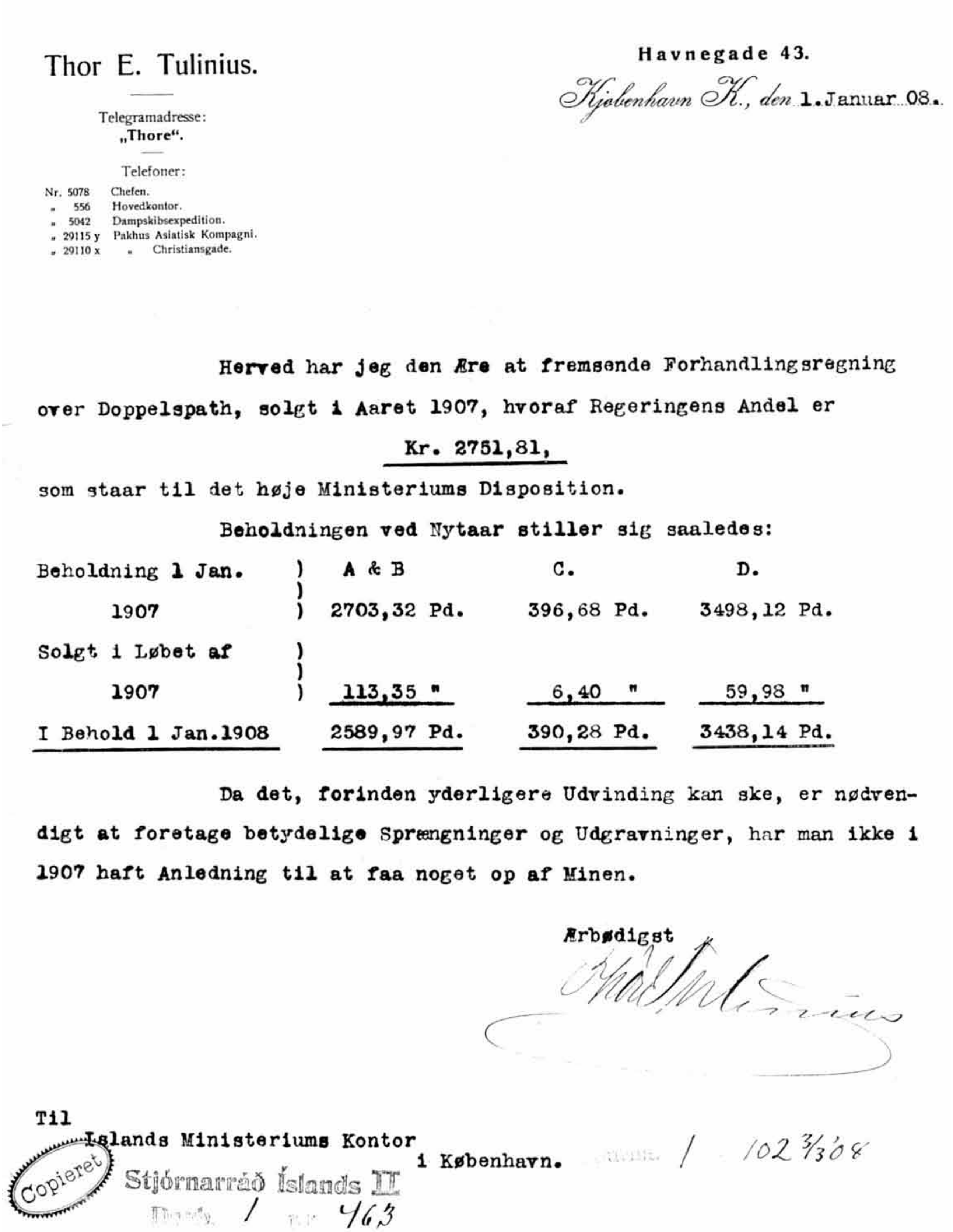

Thor E. Tulinius.

Telegramadresse:
„Thore".

Telefoner:
Nr. 5078 Chefen.
„ 556 Hovedkontor.
„ 5042 Dampskibsexpedition.
„ 29115 y Pakhus Asiatisk Kompagni.
„ 29110 x „ Christiansgade.

Havnegade 43.
Kjøbenhavn K., den 1. Januar 08.

Herved har jeg den Ære at fremsende Forhandlingsregning over Doppelspath, solgt i Aaret 1907, hvoraf Regeringens Andel er

Kr. 2751,81,

som staar til det høje Ministeriums Disposition.

Beholdningen ved Nytaar stiller sig saaledes:

	A & B	C.	D.
Beholdning 1 Jan. 1907	2703,32 Pd.	396,68 Pd.	3498,12 Pd.
Solgt i Løbet af 1907	113,35 "	6,40 "	59,98 "
I Behold 1 Jan.1908	2589,97 Pd.	390,28 Pd.	3438,14 Pd.

Da det, forinden yderligere Udvinding kan ske, er nødvendigt at foretage betydelige Sprængninger og Udgravninger, har man ikke i 1907 haft Anledning til at faa noget op af Minen.

Ærbødigst
Thor Tulinius

Til
Islands Ministeriums Kontor
i København.

Copieret

Stjórnarráð Íslands II
/ 463

/ 102 3/3 08

Figure 32-1. A balance sheet from Thor E. Tulinius for the sales of Iceland spar in 1907 (National Archive of Iceland). It was accompanied by a detailed statement on income and costs. According to the 1895 contract between Tulinius and the Government, he was responsible for the operation of the Helgustaðir quarry and all sales of crystals. The net profit was to be split evenly between the parties. This amounted only to a very small fraction of the turnover of the Thore Company in trade and shipping at that time. In the letter, Tulinius stresses the need for new blasting efforts.

PREIS-LISTE

VON

Bernhard Halle

Optische Werkstatt

Steglitz bei Berlin.

Brüssel 1888.   Chicago 1893.

SPECIALITÄT:

OPTISCHE ERZEUGNISSE

ZUR POLARISATION DES LICHTS

etc.

— 12 —

100. **Prismen,** gleichseitige, brechende Kante senkrecht oder parallel zur Axe. — **Prisms** equilateral, the refracting edge perpendicular or parallel to the axis.

ca. 10	☐ mm Seite —	in the side	6,—	M.
„ 12	„ „ „	„ „ „	8,—	„
„ 15	„ „ „	„ „ „	12,—	„
„ 20	„ „ „	„ „ „	20,—	„
„ 25	„ „ „	„ „ „	30,—	„

101. **Prismen,** brechende Kante parallel der Axe im Winkel von 30° sind 30% billiger als vorstehende. — **Prisms,** the refracting edge parallel to the axis, in the edge of 30° are 30% lower in the price than the preceeding prisms.

102. Dieselben mit polirten Basisflächen.— Ditto Prisms, the basis planes polished 8—32 M.

103. **Würfel,** senkrecht und parallel der Axe. — **Cubes** perpendicular or parallel to the axis.

104. **Rhomboeder,** mit natürlichen Spaltungsflächen ohne besonderes Poliren derselben je nach Grösse und Reinheit. — **Rhombohedrons,** with natural cleavage planes without polishing of them according to dimension or purity.

105. **Rhomboeder,** mit 6 polirten Spaltungsflächen. — **Rhombohedrons,** with 6 polished cleavage planes.

15	mm Seite —	in the side	8,—	M.
17	„ „	„ „ „	10,—	„
20	„ „	„ „ „	12,—	„
25	„ „	„ „ „	20,—	„
30	„ „	„ „ „	30,—	„

106. Dieselben mit noch zwei senkrecht zur Axe angeschliffenen Flächen. — Ditto with two polished planes perpendicular to the axis.

20	mm Seite —	in the side	15,—	M.
22	„ „	„ „ „	18,—	„
25	„ „	„ „ „	23,—	„
30	„ „	„ „ „	33,—	„

Figure 32-2. Frontispiece and one page from the catalog of B. Halle (c. 1895). His workshop and supply firm, which is still in business, offered many types of Nicol prisms and other components for optical research instruments. Educational equipment for practical instruction and demonstrations on the properties of polarized light was also available.

1898, 1908, etc.), Voigt & Hochgesang, Nachet, and Zeiss, see the relevant sections in chapter 29. In the books of Landolt (1898) and Rolfe (1905) as well as in catalogs (Pellin 1899, Heele 1900, etc.), and exhibition programs (Deutsche Gesellschaft 1893), various available polarimeters for research on organic liquids are presented.

Most microscopes, polarimeters and photometers contained two Nicol prisms, some a third one or other accessories from Iceland spar. Let us estimate that an average Nicol prism was 2 cm in dimensions, cf. Luynes (1879) who quotes 2.2 cm for the analyzers in Laurent‘s polarimeters, Gumlich (1894), and a paper by M. Katalinic in Ann. Phys. 83, 1927. For this, two spar pieces of at least 2.5 cm size may have been required, which corresponds to of the order of 0.2 kg per instrument. The amount of spar of all quality classes sold by T.E. Tulinius for the state according to his available balance sheets from 1897-1908 might therefore have been sufficient for the production of an unrealistically small number of 500 instruments per year on average, even if none of this material was wasted or used for other purposes.

The balance statements by Tulinius at least from 1897 onwards repeatedly make the point that the quality of the recovered crystals is not very satisfactory, and is becoming worse. See also quotes from Badermann (1910) and Encyclopaedia Britannica (1910-11) in Appendix 1A. In 1901, not much was done except blasting cliffs in order to improve access to crystal occurrences. Three miners from Norway were brought in to carry out explosive work in 1905, but already at the end of 1906 Tulinius stressed that more blasting was needed (Fig. 32-1). No significant quantities were recovered in the years 1905-08. According to the book by Dammer and Tietze (1913), "the production" of spar was similar in 1908-10 as in the first years of the century, but this may be referring to the amounts sold by Tulinius.

A letter dated 23 Oct 1906 from the firm of Carl Zeiss to H. Hafstein, Minister for Iceland, is in the National Archive, see Kristjansson (2003). Here Dr. R. Straubel on behalf of the firm offers to purchase Iceland spar directly from the owner of the quarry, as the available material is not up to standard for their uses. New owners of the firm of B. Halle which was mentioned above, corresponded with authorities in Iceland in 1907-08 and were interested in leasing the quarry. The Halle people even wanted the government to terminate the contract with T.E. Tulinius as soon as possible, as he had told them already in 1905 that not much spar was to be found there. They had heard that samples from another locality in Iceland had reached the mainland (see also Stadthagen 1909 in Appendix 1A): it may have been at the farm Akrar in Central Western Iceland where the local farmers had discovered around 1900 that Iceland spar was to be found. This is mentioned in the Reykjavik newspaper Fjallkonan in Oct. 1901, with a favorable comment on samples from the geologist H. Pjeturss. Two Icelanders (G. Jakobsson and M. Blöndal, according to document 218 of a collection to be mentioned in section 37.1) had acquired mining rights at Akrar by 1910. In December of that year, newspapers report that Frenchmen have recently bought the Akrar mine and sent an engineer to inspect it. I have no further information on prospecting at this locality or whether any crystals were ever exported from there. Badermann (1910) writes about two spar mines, recently investigated by emissaries from German instrument makers, where some recoverable material was thought to remain. These emissaries may have been G. Angenheister and A. Ansel who made enquiries regarding the subject while travelling in Iceland; their main task however was to carry out observations connected with the 1910 appearance of Halley's comet.

In 1897 or even earlier, a locality with a variety of calcite crystals at the so-called Baidar Gate in the Crimean peninsula was becoming well known, and by the turn of the century Nicol prisms had already been made from some of these (Sokolow 1898, Zemiatcenskij 1902). A minor quantity of Iceland spar crystals "not much inferior to those from Iceland" had been found at Auerbach in Germany before 1900 (see abstract from a report by A. Leuze in Zeitschr. Kristallogr. 30, 1899). One wild guess at a partial explanation of the evident gap between the supply of spar crystals from Iceland and the demand, is that some manufacturers had access to source sites that others did not know about. Such sites might have been in the two areas mentioned or elsewhere, for instance in the Pyrenees (cf. section 4.1). Switzerland is also cited in some 18th century mineralogical books (e.g. Gruner 1775, p. 36) and inventories. Still another possible source region suggests itself in an 1890 catalog of the Ottawa minerals dealer C.P. Willamott who includes Iceland spar in his lists of Canadian mineral specimens for sale.

33 Components to replace Iceland spar in Nicol prisms and elsewhere, 1885-1920

When Iceland spar became scarce after 1880, scientists naturally endeavoured to economize on its use in optical instruments, and to develop substitutes. This applied mostly to polarizers, while analyzers continued to be made from Iceland spar. Some developments in the field after 1920 will be covered in chapter 35.

33.1 Glass plates, etc.

One way of producing polarized light is by reflecting ordinary light from the surface of transparent or dark glass (cf. Malus' discovery in section 6.5, Fig. 33-1) or by transmitting it through an inclined pile of glass plates. Use of the reflection method in optical equipment has various drawbacks: only about 15% of that half of the light which is desired, actually is reflected from a single surface (Fig. 7-2; 25% from both surfaces of a glass plate); the field of view (i.e. the range of usable angles of incidence) is narrow (Bennett and Bennett 1978, p. 83), the light beam changes its direction which is inconvenient; and the light is not completely polarized, due to surface imperfections (Zehnder 1908b). This method, sometimes named after J. Nörrenberg (Fig. 10-3) or C. Wheatstone (Fig. 18-2) found some applications as a polarizer in simple inexpensive microscopes (Nodot 1877; Leiss 1899, Fig. 33-2 left). Also around 1900 in heated-stage microscopes for observing crystallization processes (Lehmann 1890, 1910, Rosenbusch 1924), in magnifying viewers for quick inspection of mixed grains or large thin sections of coarse-grained rocks or sediments (Leiss 1897a, Schneiderhöhn 1922), ice (Klocke 1879, McConnel and Kidd 1888) and thin sections of individual crystals (Bertin 1879, Gumlich 1896) as in Fig. 33-2 top right. Furthermore, glass mirrors were employed as polarizers and/or analyzers in photoelasticity work (Coker and Thompson 1912, Coker and Filon 1931, Fig. 27-5 and Fig. 33-1), studies of the Maxwell effect in fluids (Zocher 1925), examination of eyes (Helmholtz 1851), inspection of mica sheets for electrical capacitors, some solar observations (Chevalier 1906), monitoring of strain in optical glass (Halle 1921) and in glass factories in general (Spencer and Jones 1931). The method was also used much in the case of ultraviolet and infra-red (> 2400 nm) light which is absorbed by Iceland spar (Lowry 1935, Françon 1963, Bennett and Bennett 1978).

By reflecting a light beam twice from parallel surfaces of glass plates or prisms inclined to the beam at the polarizing angle, it was shifted laterally instead of changing direction (P in Fig. 12-2). One design due to Delezenne (1834) is described by Barnard (1863, p. 132) and sold by Pellin (1899). Thompson (1889, 1905) presents a modified form of this polarizer, see Fig. 33-1.

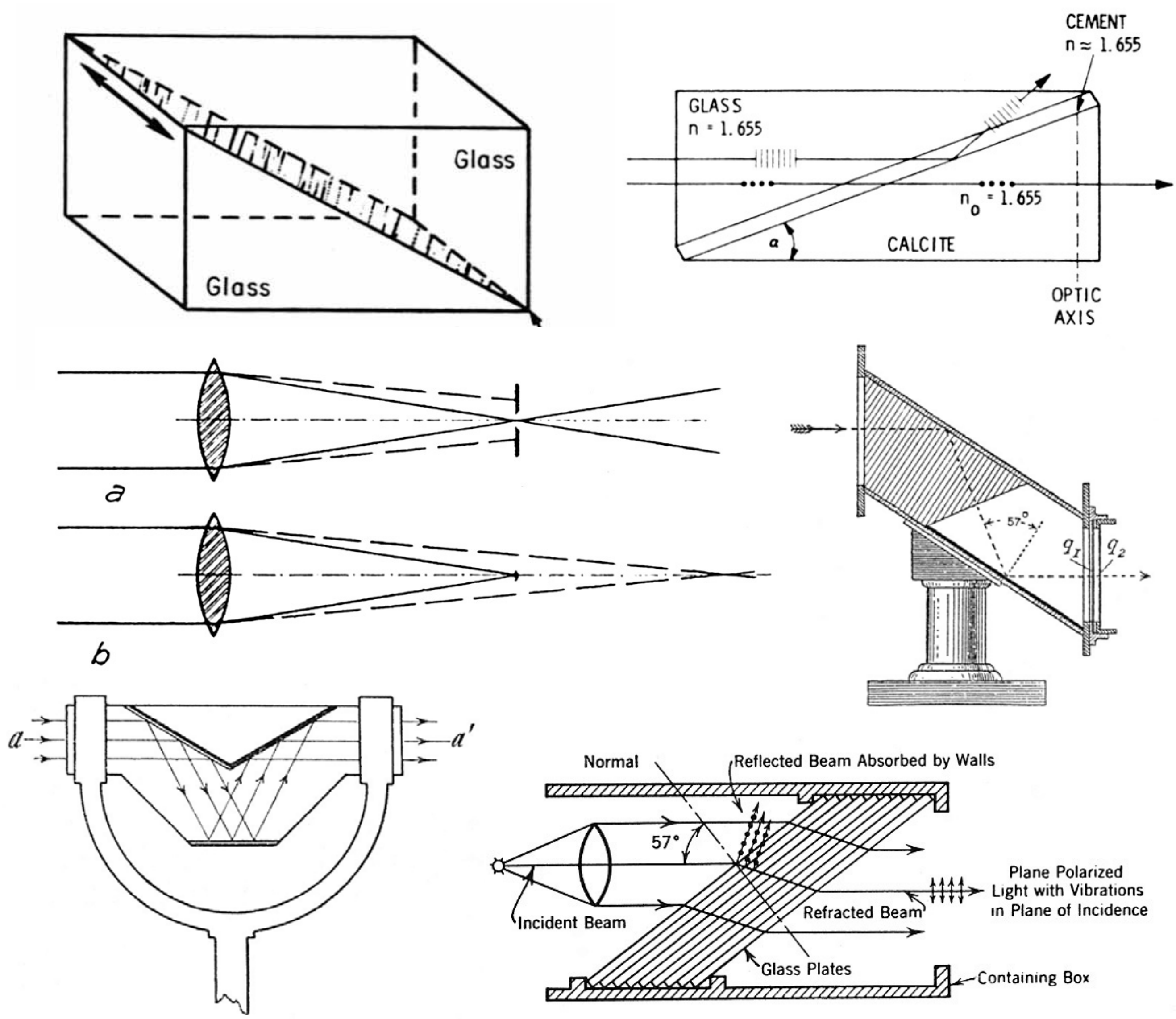

Figure 33-1. Various means of creating linearly polarized light, to economize on Iceland spar or replace it. None of these attempts gained wide application. *Top left:* A so-called Feussner prism, improved by Bertrand (1884). It is a sandwich of glass with a thin diagonal plate of calcite. Instead of the glass, a liquid with a high refractive index could be used, and sodium nitrate instead of calcite. From Bennett and Bennett (1978). *Right:* A composite glass-calcite prism as suggested e.g. by Leiss (1897c). From Ammann and Massey (1968). *Center left:* A calcite lens with two focal points; the optical axis is in the plane of the lens. The unbroken lines on the right indicate the ordinary ray; it is intercepted in the lower diagram while in the upper one the extraordinary ray is screened off (Schulz 1925). *Right:* Polarization by reflection (at the lower surface, following total reflexion at the upper surface of a trapezoidal glass prism). q_1 and q_2 are mica quarter-wave plates, which make it possible to rotate the plane of polarization of the emergent light. From Thompson (1905), based on a design by Delezenne (1834). *Bottom left:* Polarization by two reflections from the sides of a triangular glass prism (and a polished metal surface below). From Rosenberg (1924). *Right:* Light being polarized by passage through a pile of tilted glass plates (Frocht 1941).

Other designs were suggested by Hall (1892) and Grimsehl (1905). Triple glass mirrors were also introduced, e.g. for projectors coupled to microscopes (Metzner 1920). Polarizing prisms from glass occasionally replaced the glass plates, for instance in Schulz (1911, cf. Johannsen 1914, p. 175, Metzner 1920) and Rosenberg (1924, see Fig. 33-1). However, they do not seem to have been widely used, possibly because of a narrow field of view or because of poor image quality due to strains in the glass (Glazebrook 1923, p. 498).

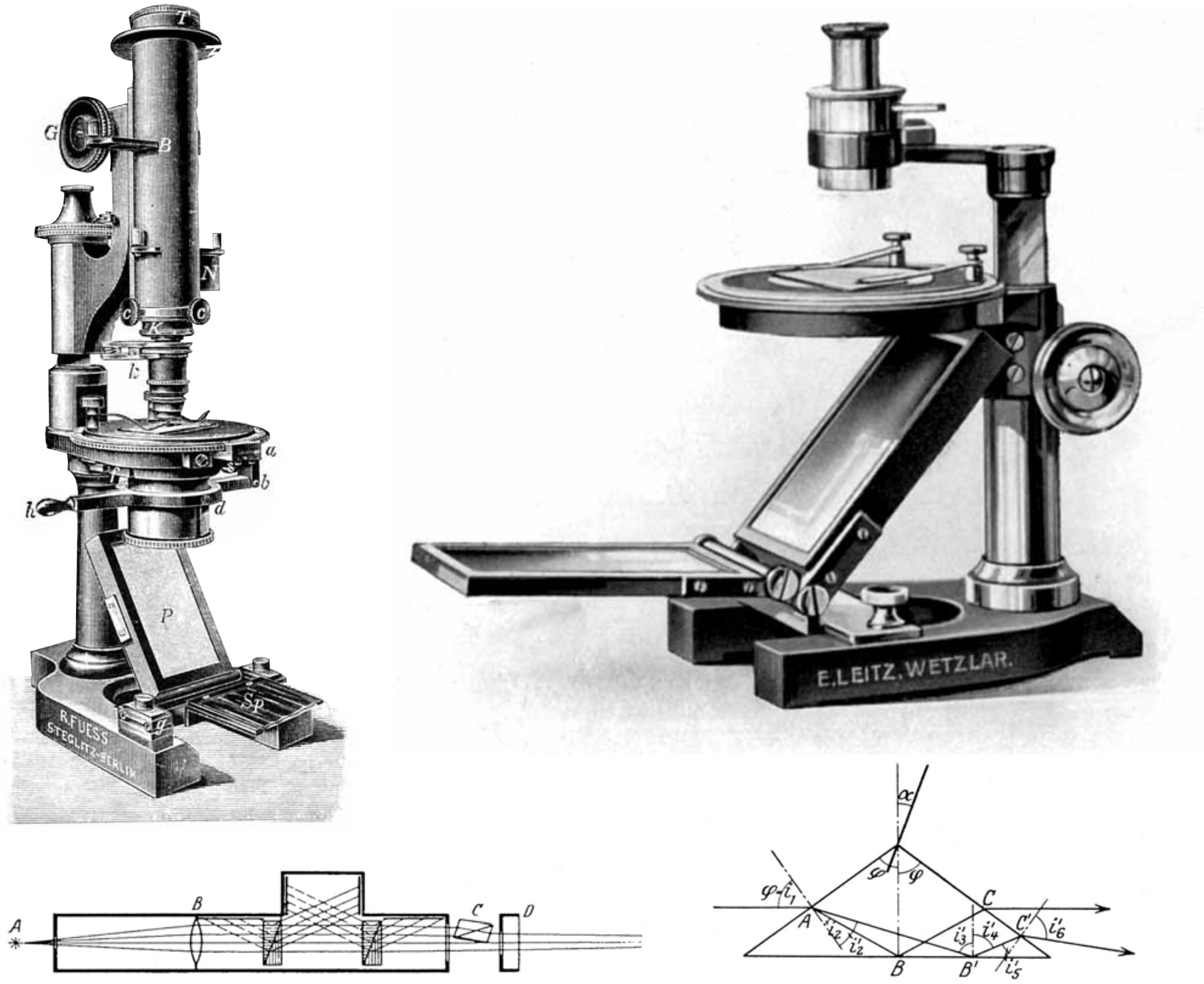

Figure 33-2. More ways of saving Iceland spar. *Top left*: A microscope with a glass-plate polarizer P and a small analyzing Nicol prism at N, probably intended for student use (Leiss 1899). *Right*: A device for rapid inspection of e.g. mineral fragments or large thin sections, with a glass mirror for polarizing. An ocular magnifier with an analyzing prism is at the top (Schneiderhöhn 1922). *Bottom left*: A polarimeter where two Senarmont prisms, made from leftover Iceland spar pieces, substitute for a Nicol prism. Dark matt glass plates absorb unwanted rays. A half-shadow field of view is provided by the small Nicol prism C (Schönrock 1928). *Right*: Dove's (1864) Iceland spar prism was occasionally used as a polarizer in optical equipment, e.g. around 1920 when Iceland spar was costly (Schönrock 1928). A ray of ordinary light entering horizontally from the right exits as two linearly polarized rays in different directions.

After 1900, several versions appeared of the method where polarized light was produced or analyzed by transmission through a pile of tilted glass plates. Applications included museum exhibits (Schwarzmann 1904), equipment for practical exercises in schools (e.g. Thompson 1905, p. 234-235), and some projectors for demonstrations of polarization effects (Kohl 1909). See also arrangements proposed by Brodsky (1919), Metzner (1920), Wien-Harms (1928, p. 370-373), and Frocht (1941, Fig. 33-1 bottom right). However, it also has limitations such as the light being less completely polarized than predicted by theoretical formulas (Bennett and Bennett 1978, p. 88). Nelson (1919) finds this light to be unsuitable for microscopy, and Bruhat (1930, p. 6) says that glass-plate polarizers generally are inadequate for use in any measuring apparatus.

A few attempts were made at employing thin plates of tourmaline e.g. in petrographic microscopes (Nelson 1902) and in projectors for teaching about polarized light (Lummer 1909, p. 960). This met with limited success, as different samples of this mineral have different colors (Nägeli

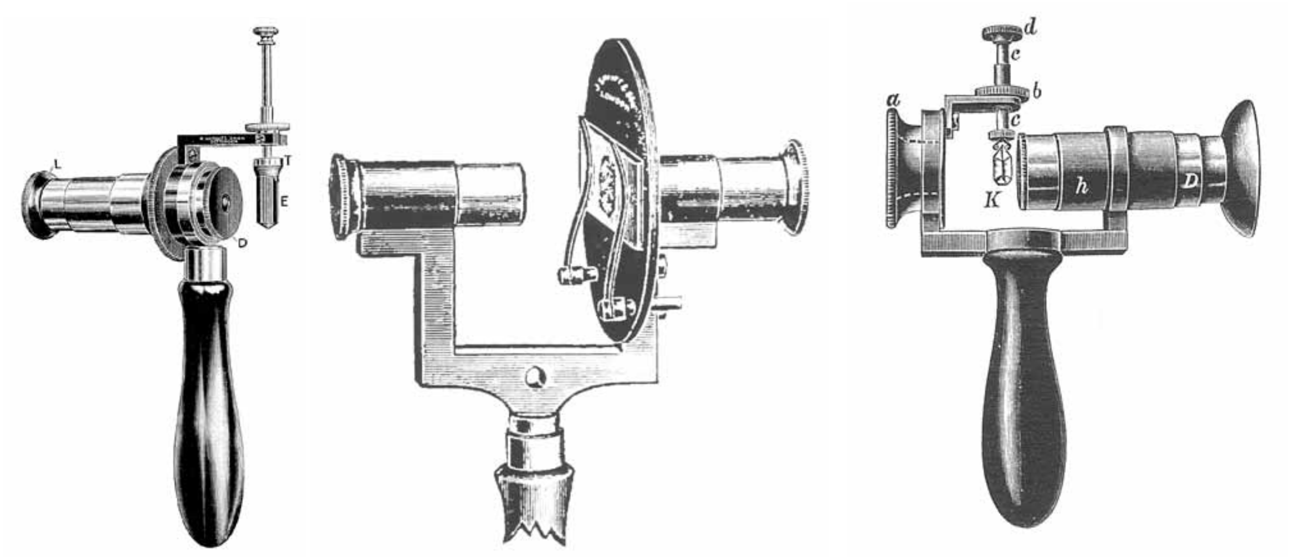

Figure 33-3. Dichroscopes for inspection of gemstones. on the *left* from Winkel/Zeiss (as shown in their leaflet no. 200, around 1920), on the *right* from R. Fuess (Leiss 1899b). These are advanced models, allowing for rotation of the specimen about two axes. In the *center* we have a viewer from J. Swift & Son for checking whether thin sections have reached an appropriate thickness when being ground (from J. Royal Microsc. Soc. 1907).

and Schwendener 1867, p. 297, Nelson 1919, Wien-Harms 1928, p. 398; section 12.3 above). Tourmaline was therefore mostly used in simple devices for the rapid identification of minerals by means of interference patterns or dichroic properties (Halle 1921, p. 125, Rosenbusch 1924, p. 221; catalogs and many other references; Fig. 12-3), for observing the polarization of sky light (Busch and Jensen 1911, p. 293), in teaching (Hauswaldt 1904), and by amateur microscopists. Lommel (1881a, and earlier) described plates from a magnesium-platinum-cyanide compound that had a similar effect as tourmaline, but only on blue light.

Small or slightly defective Iceland spar crystals could be used in the dichroscopes for evaluation of gems etc. that were described in section 13.4, see Fig. 33-3. This figure also illustrates a handy device with small Nicol prisms for checking whether a thin section had been ground to proper thickness.

33.2 Calcite-saving prisms, and calcite lenses

The great diversity of Nicol-type prisms indicated in Fig. 12-1 partly resulted from efforts to optimize their performance in the various optical instruments. Many different materials were also used for cementing the two prism halves, instead of the original Canada balsam.

Soon after the invention of the Nicol prism, H.F. Talbot realized that its exit half played no part in the polarizing function of the prism; it only insured that the extraordinary ray did not change its direction of propagation in the prism as a whole. Therefore, much valuable raw material could be saved by replacing this half with glass. However, experiments to test this possibility were not performed until the early 1870s (Talbot 1872, Leiss 1897c, Lommel 1898), see top of Fig. 33-1. Although it was easy to find a glass with a suitable index of refraction for say yellow light, glasses having also the same dispersion as calcite could not be procured for a long time yet (Halle 1921, p. 113, Hardy 1935). Therefore, two perpendicular spar-glass prisms would not completely extinguish a white light beam. When at last glass with the right dispersion became available (Ammann and Massey 1968) image distortion appeared, as well as problems due to the different thermal expansion of glass and calcite (Bennett and Bennett 1978, p. 39-40 of Ch. 10).

It was attempted to invert the composite glass-calcite prisms, by letting the light ray travel first through a glass wedge of high refractive index, so that the extraordinary ray would be reflected away at the interface. However, this required using a glue with a refractive index of at least 1.655, rarely encountered in such materials. Yet another spar-saving approach was to place a thin plate of Iceland spar between two wedges of glass or of certain liquids like CS_2 (Jamin 1869, Feussner 1884, Bertrand 1884a, Madan 1890, Sang 1891, Coker 1923, Coker and Filon 1931, p. 60, Fig. 33-1) but this also encountered thermal expansion problems (see Ammann and Massey 1968, Bennett and Bennett 1978). Prisms of that type also transmitted a narrower range of wavelengths than than ordinary Nicol prisms. One version designed by Brace (1903) was said to be a very good polarizer but fragile and difficult to handle. Steeg & Reuter (1914, p. 75) remark that that calcite- or nitrate-plate polarizers are only of historical interest, and according to Handbuch der Physik vol. 20, 1928 they have hardly been used at all.

Around 1920 there are signs of people beginning to use beam-splitting Iceland spar prisms (section 12.1) instead of the composite Nicol prisms for polarizers in experiments (Wood and Mohler 1918) and instruments. Grosse (1887) had in fact pointed out long before, that the right-angle prism first described by Dove (1864, Fig. 33-2) was inexpensive and also quite practical in some situations. In a short note in Nature 103, p. 239, 1919 it is mentioned that F.J. Cheshire had utilized a beam-splitting prism in a projector he constructed, needing for it only one-eighth of the spar material going into a Nicol prism of comparable performance. For a similar purpose Weigert and Käppler (1924) used a Senarmont double image prism, and Hardy (1935) chose a Rochon prism for his popular spectrophotometer. Schönrock (1928, p. 729-731) remarks that manufacturers some years before (i.e. about 1920?) redesigned some of their polarimeter models in order to employ Senarmont- and Dove prisms, because very decent polarizers could be obtained in that way from spar pieces previously discarded.

A clever approach to Iceland spar savings in optical instrumentation involved making lenses from it instead of prisms. This method was described e.g. by Fedorow (1901) but Martin (1774) and Rochon (1783) originally drew attention to that possibility. If a point light source is placed sufficiently far from a converging spar lens (Fig. 33-1), two images of it appear on the other side of the lens. The ray forming the image closer to the lens may be disposed of by letting it fall on a small opaque screen, which will only slightly diminish the intensity of the other image. Such lenses were used for instance by Sagnac (1904) in testing some aspects of the propagation of light along the axis of optical instruments, and by Lowry (1908, Lowry and Coode-Adams 1927) in research on the optical activity of quartz in the ultraviolet. Several papers on the properties of calcite lenses appeared in the 1920's in connection with a patent dispute (see Schulz 1925) but they do not seem to have found any lasting applications.

33.3 Saltpeter crystals

In order to release optical research from the burden of inadequate Iceland spar supplies and some of the material's limitations, it would have been sufficient to find a comparable natural or man-made mineral. The most obvious choice and the only one seriously considered, was sodium nitrate (Chile saltpeter). It is transparent, inexpensive, trigonal and optically negative like calcite, and has an even stronger double refraction ($n_o = 1.587$, $n_e = 1.336$). It is also isomorphous with the calcite group of carbonates, having angles of about 106° between its faces instead of calcite's 105°. See Feussner (1884) and Bertrand (1884a) on prisms and plates from saltpeter which they hoped would find their way into general use in optical instruments. A report on years of work in growing saltpeter crystals was presented by Wulff (1895, 1897). The task turned out to be challenging, but people continued believing in this alternative for a number of years; thus, Bauer (1904, p. 269) says about Nicol prisms that “sometimes they are made from other substances (sodium saltpeter, etc.)”. In an equally optimistic vein, Badermann (1910) indicates that “large pieces of saltpeter of quite good quality” are arriving on the market from Paris. Unfortunately, it is very hygroscopic, so that all polished surfaces must be coated immediately with other materials. It is also much more difficult to work with than calcite (Halle 1921), due at least in part to its softness. According to Schulz and Gleichen (1919, p. 42): “The attempts made to replace…calcite by other crystals of similar optical properties, have so far not resulted in any practical solution.”.

34 Various research topics, 1900-30

34.1 Physical properties of Iceland spar, etc.

Research on the properties of Iceland spar and of calcite in general continued after the turn of the century. No doubt its results were useful in some ways, although not always opening up new avenues in science. In addition to optical studies on the spar (sections 28.3 and 34.2) there were investigations of its magnetic properties (Königsberger 1898, Voigt and Kinoshita 1907), cleavage directions (Friedel 1902), electrical properties (Fellinger 1902, W. Schmidt 1902, Pisani 1906, Röntgen 1907, Richardson 1915, Joffé 1923, Rautenfeld 1923), deformation caused by pressure (Rinne 1903, Adams 1910), changes in crystal shape and refractive indices at low and high temperatures (V.M. Goldschmidt 1912, Wright 1913b, Rinne 1914), weight changes during heating (Nernst and Riesenfeld 1903, probably the first ever experiment of that kind), dissociation and melting at very high temperature (Brill 1905, Boeke 1912), etching and rate of dissolution (V. Goldschmidt and Wright 1903, 1904, Beilby 1909, Gaubert 1912, Honess 1918), thermal conductivity (Eucken 1911), dimorphism (Brillouin 1911), and the transformations occurring in calcite during calcination (Rinne 1928). Bäckström (1921, 1925) carried out a thorough investigation of thermodynamic variables during the conversion of aragonite to calcite, using in part crystals presumably of Iceland spar. Meigen (1907) also used Iceland spar when developing a chemical method to distinguish between specimens of calcite and aragonite. Results from some of the above experimental results were discussed with reference to theoretical models.

In the above time interval, important books on optics and crystal properties appeared, often reviewing previous research on Iceland spar. These include Drude (1900a), Becker (1903), Boussinesq (1903), Wood (1905a), Pockels (1906), Winkelmann (1906), Lummer (1909), Voigt (1910), and Schuster and Nicholson (1923). See Fig. 34-1. On the theoretical side, a general paper by Grünwald (1902) on the transmission of elastic and electromagnetic waves through uniaxial crystals was a notable step forward (Gårding 1989). Around 1915 a number of papers were published on light in liquids and crystals, for instance by P. Langevin, M. Born (1915), P.P. Ewald, and C.W. Oseen.

It is also worth pointing out at this stage, that doctoral theses in the 19th and 20th centuries often involved polarized light and double refraction in one way or the other. This applies to many fields of the physical sciences, but also to some extent to biological sciences and engineering. Results of these projects were in many cases presented in papers in scientific journals, or printed on their own (Fig. 34-1), even both. Thousands of young scientists thus received their basic training in research through involvement with Iceland spar, and many of these continued into illustrious careers.

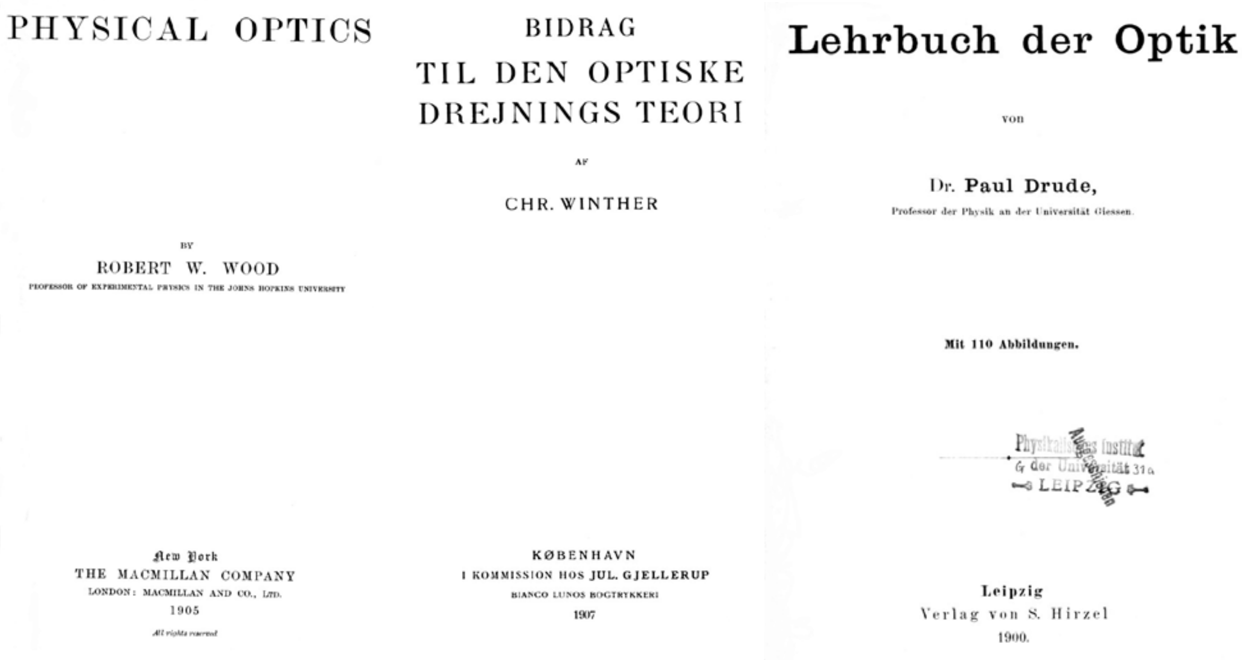

PHYSICAL OPTICS

BY
ROBERT W. WOOD
PROFESSOR OF EXPERIMENTAL PHYSICS IN THE JOHNS HOPKINS UNIVERSITY

New York
THE MACMILLAN COMPANY
LONDON: MACMILLAN AND CO., LTD.
1905
All rights reserved

BIDRAG
TIL DEN OPTISKE
DREJNINGS TEORI

AF

CHR. WINTHER

KØBENHAVN
I KOMMISSION HOS JUL. GJELLERUP
BIANCO LUNOS BOGTRYKKERI
1907

Lehrbuch der Optik

von

Dr. Paul Drude,
Professor der Physik an der Universität Giessen.

Mit 110 Abbildungen.

Leipzig
Verlag von S. Hirzel
1900.

Figure 34-1. *Left and right*: Two of the best-known university textbooks in optics at the beginning of the 20th century. Wood's (1905a) book appeared in three editions as well as reprints. New editions of the book by Drude (1900a) were published in 1906 and 1912 and later reprinted; there were also two editions in English and one in French. Both books covered a great deal of material related to polarization and double refraction. *Center*: A doctoral thesis in physical chemistry from Copenhagen University (Winther 1907). Research on or with polarized light constituted a significant part of many such dissertations in fields within earth science, physics and chemistry, and also some in biology or engineering.

34.2 Oscillating systems in matter

One major motive for detailed measurements of the frequency dispersion of both refractive indices and optical rotation on both sides of the visible band of the spectrum, was a desire to describe it with formulas that were simple, accurate, and representing physically realistic models. Before 1900, H.v. Helmholtz (1892), H.A. Lorentz and others explained the former dispersion with general formulas (which Sellmeier (1872) and Ketteler (1874) had in fact already proposed from the viewpoint of the old theories of light, see section 21.2). They were based on Maxwell's electromagnetism and the suggested presence of damped oscillators within the molecular structures, having various different resonance frequencies. Changes in the refractive index (including the phenomenon of anomalous dispersion) will be most pronounced in the vicinity of a resonance frequency. There, the absorption of the light will also reach a maximum (Fig. 34-2), as was confirmed in measurements by Pflüger (1898) on dyes using König's polarizing spectrophotometer.

The unequal absorption of left- and right-handed circularly polarized light. i.e. the Cotton (1895a,b) effect of section 22.3 was studied by McDowell (1905, Fig. 34-2), Olmstead (1912) and Bruhat (1915, 1920). Their work spanned the visible spectrum in solutions of colored inorganic salts and optically active organic salts, showing some resonance features (absorption bands). A theory of the effect was presented by Natanson (1909). This method turned out to be a promising tool for studies of molecular structure. Due however to the laborious experimental procedures involved, its potential was not realized at this stage. See the next paragraph.

Among papers reporting rotatory dispersion measurements on organic compounds in detail at visible wavelengths were those of Tschugaeff (1911), Darmois (1911), Lowry (1913b), Bruhat (1915, 1920), Grossmann and Wrechsner (1917), and Longchambon (1922, many crystals). Ultra-

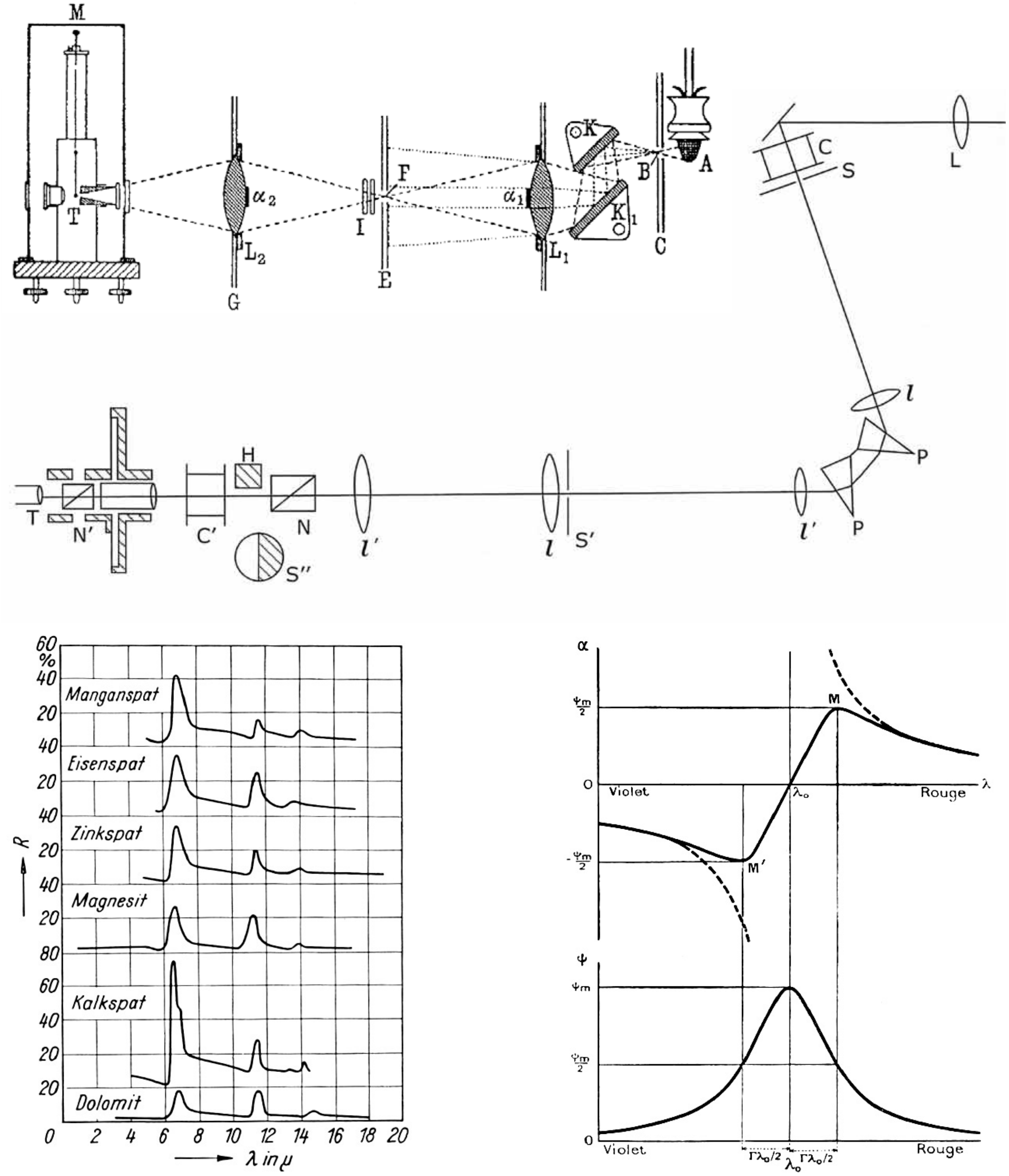

Figure 34-2. *Top*: Rubens’ (1911) equipment for measuring infrared radiation (80-130 μm wavelengths) reflected from the calcite plates K, K1. A is the lamp producing the radiation, which is then detected with the thermocouple T. *Center*: Part of the experimental setup of McDowell (1905, redrawn) to measure the Cotton effect of dissolved tartrates in the glass vessels C and C’. PP are glass prisms, N, N’ and H are Nicol prisms. T is a telescope. *Bottom left:* In the spectrum of infrared light (5-15 μm in this case) reflected from the isomorphous metal carbonates there are peaks at similar wavelengths. The vertical scale shows relative intensities in %. The peaks correspond to vibrations of atoms within the CO_3-group (Schaefer and Schubert 1916). *Right*: Both the usual dispersion of light and its rotatory dispersion in matter are due to the fact that the light excites damped oscillations of atoms (Drude 1900a). The upper curve shows qualitatively how the index of refraction or the optical activity change as functions of the (vacuum) light wavelength around a resonance frequency of the electrons or the atoms in a material. The broken curve segments are plots of simple approximation formulas. The lower curve indicates how the absorption, and the reflectivity as well, reaches a maximum at the wavelength of resonance (Bruhat 1942).

violet studies of this phenomenon were mentioned in section 29.8. Lowry and Dickson (1914) emphasized that rotatory dispersion curves of simple (previously: normal) shapes in non-absorbing optically active compounds were due to resonance vibrations in molecules where only one carbon atom had mirror-image symmetry, while complex (previously: anomalous) curves were found in compounds with more than one such asymmetric carbon atom. See Darmois (1922), Kuhn and Braun (1930), and Mitchell (1933) for further developments. In section 39.1 it will be indicated how optical rotatory dispersion (and to some extent also the Cotton effect) provided further valuable biochemical information in the second half of the 20th century.

New measurements on the dispersion of light in Iceland spar were carried out by Carvallo (1900) over a broad range of wavelengths, 214-2300 nm. Gifford (1902) also measured the refraction indices in Iceland spar and other materials at various wavelengths to 7 decimal places; however, probably only 5 are significant (Hintze 1930). The observed dispersion in most materials indicated (e.g. Carvallo 1900, Martens 1901) that the resonance frequencies of their particles were quite far from the visible range on both sides. Drude (1900a) pointed out that a similar formula could be used in accounting for the optical rotatory dispersion in quartz, however using only the ultraviolet resonance frequency deduced from its refractive index dispersion. Drude's formula in fact fitted the rotatory dispersion in quartz, measured by Gumlich (1898) in the interval 214-2200 nm, much better than earlier empirical formulas by Boltzmann (section 18.1) and others. At that time, precise rotatory dispersion measurements had not been made for other materials over a wide wavelength interval, but the dispersion of the Faraday effect in two liquids measured by Joubin (1889) agreed with Drude's derivations. Drude (1900a, p. 383) also points out in support of his approach, that the absorption of circularly polarized light discovered by Cotton (1895a, see section 22.3 and Lowry 1935, chapter XXXI) is analogous to the absorption mentioned in the previous paragraph.

It had become clear by 1900 (from the Zeeman effect and deflection experiments) that an electron was about 1800 times lighter than a hydrogen atom (proton), and it is well known that the resonance frequency of an oscillator with a given force constant is inversely proportional to the square root of its mass. This made it likely (Drude 1904) that the ultraviolet resonance frequencies in molecules belonged to electrons while infrared ones corresponded to vibrations of single atoms, parts of molecules, or entire molecules. Nutting (1903b) measured the ultraviolet rotatory dispersion of solutions of four organic compounds, and estimated a resonance frequency for each.

H. Rubens and collaborators who investigated infra-red radiation from about 1892, found that plates of insulating materials which are transparent in visible light, absorb strongly in a small number of infra-red frequency intervals. These rays are therefore reflected (Fig. 34-2 top), and after 3-5 reflections of heat radiation from the same material it consists of a few narrow frequency bands. Rubens called them "residual rays" (Reststrahlen) from 1897; the first materials investigated in this way (see D.S.B.) were quartz which yielded rays of about 8800 nm wavelength, and fluorspar with about 24000 nm. Common salt, mica, diamond and other crystals soon followed, including calcite (Fig. 34-2) whose residual rays included one at an unusually short wavelength of 6800 nm. Some of these wavelengths agreed with the infra-red resonance frequencies which could be computed from dispersion measurements at shorter infra-red and visible wavelengths. For instance, Aschkinass (1900) showed that the frequencies were (at least in part) the same for two different modifications of calcium carbonate, namely calcite and marble; therefore it was likely that such oscillations were taking place within molecules rather than being due to movement of entire molecules or larger entities.

Subsequently, calcite was studied in more detail, both by Rubens (1911, Liebisch and Rubens 1919) and by others (Morse 1907, Nyswander 1909, Koch 1911, etc.). C. Schaefer and his coworkers (e.g. Schaefer and Schubert 1916, see Fig. 34-2, Schaefer et al. 1926) and others (such as

Plyler 1929) compared the observed residual infra-red frequencies from calcite (probably Icelandic), other metal carbonates, saltpeter and further compounds to computations of their resonance frequencies based on information from X-ray diffraction and bulk physical properties. Using a selenium mirror for polarization, they could discriminate between oscillations belonging to the ordinary ray and those belonging to the extraordinary ray. Some of the strongest reflections occurred at the same frequencies in all the isomorphous trigonal carbonates. The structure of these reflection peaks which presumably represented oscillations within the CO_3-group, was the subject of special investigations (Schaefer et al. 1927, Schaefer and Matossi 1930). Other (lower) resonance frequencies which differed between these minerals could be due to the metal ion oscillating relative to that group as a whole. As indicated in the final paragraph of section 29.8, the residual radiation from calcite was also used in investigations on other substances up to the late 1920s, including gases (Koch 1909) and metals (Hagen and Rubens 1910). The latter authors confirmed a very useful prediction based on Maxwell‘s equations, that the reflectivity of a polished metal surface in the infrared is a simple function of the wavelength and the metal‘s electrical conductivity. Later, the properties of residual rays played an important role in the interpretation of the Raman effect, see section 39.7.

34.3 Infra-red radiation and thermodynamics

In the 19th century, it was known that when a piece of solid matter was heated, the agitation of its constituent particles increased. However, little was known about the nature of those motions or their connection to the radiation from hot surfaces. If a piece of matter resembles a black body (section 17.3), the radiation takes place over a wide frequency range as is also well known. Hence, it is natural to assume that the movement of particles inside a piece of material is more or less of a random character, cf. the speed distribution of molecules in a gas. The unexpected finding that the molecular systems within crystals had only a few characteristic frequencies of vibration in the infrared (cf. section 34.2) and ultraviolet (Martens 1902, incl. calcite), became the foundation of a new hypothesis on their specific heats by Einstein (1907). For that purpose he employed the quantum theory along with the simple assumption that all the atoms in a given material are independent oscillators having the same infra-red resonance frequency. With input from a table of the residual ray frequencies of calcite and four other transparent crystalline substances, he deduced formulas for the specific heat of each as a function of temperature. He also argued that because of the high resonance frequency of electrons in solids, they did not contribute to the specific heat. Einstein’s formulas agreed reasonably well with the rapid decrease in specific heat which experiments had shown to occur when the temperature approached absolute zero.

Einstein (1911) also considered the thermal conductivity of insulators in the light of the quantum theory, referring to measurements by Eucken (1911) of how the conductivity of calcite and some other crystals changes with temperature. The papers by Einstein attracted attention (see entry on W. Nernst in D.S.B.) but by 1911 it had become clear that his theory on specific heats needed improving. P. Debye and others soon succeeded in this, by looking at the thermal movements in a crystal as oscillations of the crystal structure as a whole, rather than of individual atoms. In A.H. Wilson’s 1960 book: Thermodynamics and Statistical Mechanics, it is stated that all these researches “…had a considerable influence on the early development of the quantum theory.”. They indeed pointed the way towards applications of quantum theory to the specific heat of other states of matter, other properties of materials, mechanical systems in general, and fundamental aspects of thermodynamics.

34.4 Photochemistry, canal rays, and impact radiation

The influence of light on chemical reactions and other atomic processes was of considerable interest to scientists after the mid-19th century. Specific effects being studied included ionization of air by ultraviolet rays, photosynthesis, bleaching of colors by sunlight, darkening of silver halides (which is the basis of photography), fluorescence, and explosive combination of gaseous hydrogen and chlorine (Chlorknallgas) to form hydrogen chloride. Observations relevant to some of these processes early in the 20th century made use of photometers with Nicol prisms, for instance by Camichel (1905) and Wawilow (1921) on fluorescence, Regener (1906) on ozone formation, Lasareff (1907) on bleaching of dyes, Luther and Forbes (1909) on a certain photochemical reaction, and by various investigators on photographic emulsions (see final paragraph of section 29.5).

On the basis of the new quantum theory, Stark (1908) and Einstein (1912) proposed that the first step of a photochemical reaction in an atom or a molecule is accompanied by the absorption or emission of a photon of radiation. These ideas generated new experimental activity, but its results were in most cases difficult to interpret due to the complexity of the processes involved. Among such experiments employing polarizing photometers were those of Stark (1911) on photography, Hattwich (1913) on fluorescence, Vranek (1917) on decomposition of salts, Wise and Adams (1918) on photographic sensitizers, Weigert (1921a,b) on silver halides and vision respectively, Hecht (1924) on vision, Predwoditeleff and Netschajewa (1925) on fluorescence, Mukherji et al. (1928) on light absorption in solutions, Emerson (1929) on photosynthesis, and Kistiakowsky (1930) on photochemical decomposition. Weigert (e.g., 1920) investigated in detail the influence of polarized light on a number of photo-sensitive substances; his papers have been widely quoted in later works on light perception by organisms and on photochemistry in general. One theoretical question which was also of interest in biology, concerned the possibility of somehow using circularly polarized light to create optically active materials out of inactive ones. After several unsuccessful attempts by others, Kuhn and Braun (1929) reported the production of very slight temporary optical activity in a racemic solution of a selected organic compound by irradiating it with circularly polarized ultraviolet light. This result was said to be in agreement with the relevant theory of asymmetric photochemical action.

In 1886, E. Goldstein discovered so-called "canal rays", i.e. streams of positively charged atoms that could be generated in evacuated glass vessels with perforated high-tension electrodes. These particles emitted light when colliding, and the Stark effect mentioned in section 30.2 above was in fact originally detected in light of that kind. The canal radiation was subject to considerable research in the early 20th century, including its polarization under various conditions (e.g., Stark and Lunelund 1914, Traubenberg and Levy 1926, Hertel 1927), and the spectral distribution of the radiation was measured with a König-Martens polarization spectrophotometer (Stark and Steubing 1908). Some of this research gave information about the lifetimes of excited atomic states and was considered to be "an important contribution to the problem of the nature of light" (Tomaschek 1934, p. 223-224) but it will not be dealt with further here. The part played by canal rays in the development of atomic physics does not seem to have been given much prominence in historical accounts.

One more field of research which was initiated in the 1920s, had to do with light emitted when a beam of electrons hit a metal surface or noble-gas atoms (Stossleuchten). This light turned out to be polarized in some cases, and attempts were made to correlate its properties with quantum states in the atoms involved (e.g., Eldridge and Olson 1926, Quarder 1927, Skinner and Appleyard 1928, Steiner 1929, Fig. 34-3). Previous experiments along similar lines which however did not use optical techniques, include that of J. Franck and G. Hertz in 1914, and that of Gerlach and Stern (1922).

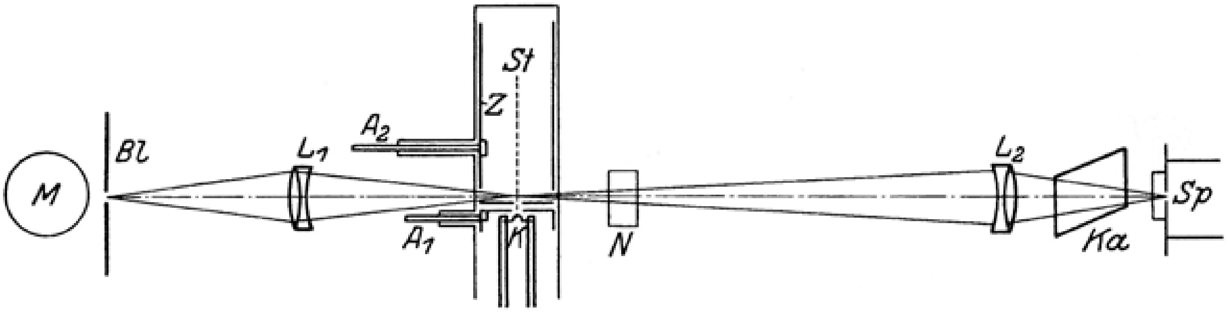

Figure 34-3. Steiner's (1929) instrumentation to study the spectrum and polarization of light emitted after the impact of an electron beam St (from the cathode K) on neon or helium atoms. This light is analyzed with the Nicol prism N, the calcite rhomb Ka and a spectrograph to the right of Sp. The lamp M to the left is only used for aligning the optical system before measurements.

34.5 Miscellaneous studies, 1900-30

A variety of experimental studies involving Iceland spar or Nicol prisms do not fit readily into other sections of this report. The following is a somewhat arbitrary selection of such projects, illustrating the versatility of polarized-light methods in pure and applied fields of research.

Levene and Slyke (1913) and Willaman (1918) tested new methods of separating simple organic acids by combining them with heavy-metal acids. Bourquelot (1920) and Pictet and Vogel (1926) described the synthesis of some disaccharides. Yoshikawa (1913) measured the amount of lactic acid in muscles and other organs of mammals. A procedure for the analysis of carbohydrates in green leaves (Wilson and Atkins 1916) involved oxidation by bromine. Levene (1916) showed that a substance (sphingomyelin) known since 1884 to occur in brain tissue, also was present in liver, kidneys and egg yolk. Dakin and Dale (1919) found differences between the egg-albumins of hens and ducks. Blake (1916) studied the breakdown of polysaccharides during digestion of bread. Tannins and related substances derived from plants were the subject of many papers by K. Freudenberg, P. Karrer and their groups (Freudenberg and Purrman 1923, Karrer et al. 1923). Landsteiner and Scheer (1928) investigated stereochemical aspects of serum antigens. Hesse (1900) contributed to knowledge of the many compounds present in lichens such as Cetraria islandica. Hiller (1917) identified a pentose sugar present in urine due to a rare hereditary condition, as a xyloketose. Kopeloff and Kopeloff (1919) studied how molds can degrade cane sugar. Several scientists including Kraemer and Fanselow (1925) observed colloidal changes occurring in gelatins. All of the above projects employed polarimeters; also research in the 1920s (reviewed by Hopkins 1929) on the tripeptide glutathione which is an important factor in animal metabolism.

Wright (1916), Peck (1919), Benedict (1930) and others list cases where polarizing microscopes come in handy in the examination of various crystalline grains (or mixtures of these) in industry: sugar, dyes, alkaloids (Kley 1904, Wherry and Yanofsky 1918), abrasives, detrital sediments (Milner 1922), photographic developers, amino acids, explosives (Ambronn 1913, Hoffman and Hawse 1919), building stones (Luquer 1894), raw materials for the production of paper (Dickson 1925) or of glass (Insley 1928), and so on. Schneiderhöhn (1922) recommends the use of a polarizing magnifier (Fig. 33-2) for identifying and sorting mineral grains of different types. In agriculture, the microscopes also played many roles: in studies of soils (McCaughey and Fry 1913, Steinriede 1921) and chemical fertilizers (Fry 1914, Bowen 1926), as well as in research and quality control on food products (Winton 1899), including butter (Bömer 1908, Litterscheid 1924).

The famous geochemist V.M. Goldschmidt (1920) used a polarizing microscope when inventing new titanium oxide pigments for use in paint. He patented a production process for these compounds, and the titanium white gradually replaced lead white whose properties could have adverse effects on health and the environment. Among unusual applications of these microscopes one might mention the investigation of colored cells in the skins of reptiles (Schmidt 1917), and detection of surgical sutures left in tissues (Stewart 1920). Chamot (1921, p. 50) and Weinschenk (1925, preface) criticized chemists in general for not making sufficient use of polarizing microscopes.

Manning (1913) used a calcite-prism spectrometer in work on aluminium arc spectra. Coblentz (1903) developed a new polarizing arrangement for measurements on the dichroism of iodine. Older methods were also modified for studying the optical properties of magnetic metals (Bernoulli 1909), alloys (Littleton 1911) and molten metals (Kent 1919, Aster 1922).

Rossi (1913) designed an experiment to measure the pressure exerted by a beam of polarized light, for comparison with theoretical predictions. Soon after the famous 1919 confirmation of Einstein‘s general theory of relativity, Rankine and Silberstein (1920) optimistically attempted to detect gravitational effects on light propagation in a long corridor at Imperial College, with simple equipment including Nicol prisms.

One field of research of which I have little information but where employment of polarized light was undoubtedly very advantageous, was the determination of pressure-dependent phase diagrams and equations of state for minerals and other crystalline materials. Arrangements can be made to observe such systems while the pressure is being applied. See an example regarding some bromine compounds in Wahl (1903), where references to previous work may also be found.

35 Polaroid and other polarizers after 1920; sugar measurements

35.1 Crystal growing and related matters

Complaints about the scarcity of optical calcite continued to appear in the 1920s and 1930s, cf. Appendix 1A. Paradoxically however, I have acquired glossy catalogs from the optical supply companies of B. Halle Nachfl. (c. 1930) and C.A. Niendorf (1931) both of which offer prisms and other calcite products in about 200 varieties.

Attempts to grow large sodium nitrate crystals continued, see Stöber (1924), Kremers (1940), Bouhet and Lafont (1945), West (1945) and Weyl (1953). As remarked in section 33.3, researchers were for decades hoping that rhombs or plates of the saltpeter could substitute for Iceland spar in optical instruments. These attempts seem to have failed (Weinschenk 1925, p. 15, Rinne-Berek 1953), because the grown crystals were often cloudy inside, besides being soft and hygroscopic in spite of various coating methods applied to them. Halle (1921) also notes that they were too small and impure to be useful, a view seconded by Evans (1949) much later. Niendorf (1931, p. 9) emphasizes that all known polarizing devices other than calcite prisms are only suitable for demonstration purposes.

Attempts were also made to produce calcite crystals in the laboratory. I have not looked into that story in detail, but for instance Nester and Schroeder (1967) remark that "no one has been able to successfully grow crystals of even moderate size…". Similar statements may be found in Chandler (1970) and in Kinloch et al. (1974). Even in 1996, synthetic calcite crystals were only available in small quantities (Ebbers 1999), and they contained microinclusions of water making them unfit for infra-red and ultra-violet optics. On the other hand, large defect-free specimens of some other crystals for various optical uses were grown from the late 1920s, such as various halides (LiF, KBr,…) which have good transmission properties in wide spectral ranges (Kremers 1940). After 1950 (Waesche 1960) large-scale production of perfect quartz crystals was initiated, to some extent for optical uses but mostly for other purposes including piezo-electric oscillators for clocks, telecommunications equipment, frequency meters and so on.

Still other avenues were explored in the search for calcite-prism replacements. One of these concerned so-called polarizing dispersion filters, probably made by crushing a uniaxial crystal like calcite to a coarse powder and immersing it in a matrix of clear jelly or resin (Bernauer 1930, Haase 1936-39; see also Schumann and Piller 1950, and Land 1951, p. 959). If the matrix has an index of refraction equal to that of the ordinary ray of the crystal, it should pass through the mixture without loss while the extraordinary ray is dissipated by scattering. The idea is largely based on observations made by Christiansen (1884, 1885). The most original suggestion in this field was to make the powder out of the calcite skeletons of echinoderms (Becher 1914; Steeg & Reuter 1914, p. 65). The dispersion approach which delivers more or less monochromatic light, has been used only in specialized situations.

The development of glass-mirror polarizing arrangements continued where these were found to be useful, for instance in photoelasticity research (Smith 1933). The manufacturers Goerz (1922) obtained a patent on Nicol prisms made of quartz; these were probably useful in later research on optical activity in the ultraviolet.

35.2 Herapathite and Polaroid sheets

It had been noticed in the mid-nineteenth century, that an iodine-quinine sulfate named herapathite after its discoverer (Herapath 1853, Haidinger 1853) was a more efficient dichroic polarizer than tourmaline or any other mineral. Large thin herapathite crystals could be grown and were expected soon to replace the tourmaline plates in tourmaline tongs (Haidinger 1855b). Some manufacturers indeed offered herapathite tongs (Duboscq 1859, 1870, 1885), but the material generally turned out to be too fragile for this purpose. Other applications, like fitting herapathite polarizers to amateur microscopes (Carpenter 1868), or to binoculars for mariners during WW I (Bénard 1920), seem to have been on a small scale. The herapathite never succeeded in becoming a substitute for Nicol prisms in advanced polarizing microscopes (Valentin 1861, p. 106) or in other equipment (see references in Pollard 1936). Extensive searches among related and unrelated compounds for an even better material of this kind were fruitless (Haase 1936-39). The matter was given renewed attention at the C. Zeiss company by Bernauer (1930, 1935) who incidentally also wrote papers on the geology of Iceland. Zeiss began in the early 1930s to market single-crystal plates of herapathite (Grabau 1938, Schumann and Piller 1950) for use as polarizing filters in photography (possibly also in stereoscopic devices). These were sold for a while under trade names like Herotar og Bernotar, but the fragility of the crystals remained a major problem, along with inhomogeneities in the structure of the plates.

At this point, E.H. Land was entering the stage. He became interested in optics as a youngster, when a summer-camp instructor in 1922 demonstrated with a Nicol prism the polarization of light reflected from a table top (McElheny 1998). This is reminescent of the 1808 discovery by Malus described in section 6.5. Land later studied the topic in books by Wood (1905a) and others, and began in 1927 to explore ways to imbed a large number of very small aligned herapathite crystals in transparent sheets of celluloid (see Land 1951, McElheny 1998). His first patent on such products (Land and Friedman 1933) was awarded four years after an application was filed. In the meantime he had discovered various improvements, including crystals of complex compounds with better dichroic properties than herapathite (Pollard 1936). The sheets which Land called "Polaroid" were in some respects inferior to Nicol prisms, as they absorbed some of the desired light component; two sheets at right angles also let through a little light instead of extinguishing it completely. These drawbacks however did not matter in many less demanding applications (cf. list in section 33.1), and other advantages often outweighed them: they were inexpensive, had a wide field of view, took up little space in instruments, and did not need correction for astigmatism or color distortion as was caused by Nicol prism in microscopes. The Polaroid could be produced in any dimensions, so that for instance in photo-elasticity research large test objects could be viewed as a whole. If a quarter-wave retarder was needed, it was sometimes sufficient to use cellophane wrapping paper. At the same time, the lenses required for squeezing light through Nicol prisms (cf. Kimball's apparatus in Fig. 27-5) could be left out. The old term "polariscope" now became an appropriate one for such setups (Frocht 1941, Föppl and Mönch 1959).

One chief initial motive for the development of the polarizing sheets, was to incorporate them into the headlights and windscreens of automobiles, to avoid blinding drivers by glare (Grabau 1938, Land 1951, p. 962, McElheny 1998). However, this scheme was eventually dropped, because the appearance of the road and its surroundings became unfamiliar. Instead, car manufacturers began installing headlights with high and low beams. Polaroid on the other hand was a boon to photographers, as it for instance reduced unwanted reflections from window glass (Pollard 1936) which are always polarized to some extent. For the same reason, Polaroid sunglasses patented in 1935-36 became popular with anglers, as they still are. That idea was in fact far from being original: in the first volume of Comptes Rendus (p. 405-407, 1835), F. Arago advised mariners that they can detect submerged reefs by watching the smooth sea surface through a tourmaline plate. An inexpensive device of this kind, called scopéloscope, was sold by instrument suppliers in the mid-19th century (e.g. Menier 1860). Bryson (1850) described spectacles with Nicol prisms instead of lenses, allowing engineers to inspect the bottom of rivers or canals.

Improved versions of Polaroid sheets were in production by the early 1940s. Instead of herapathite they contained organic polymers (polyvinyl alcohol, etc.) forming elongated parallel molecules (Land 1941, 1951, McElheny 1998). By stretching the sheets and staining them with a solution of iodine or metal salts, these molecules become dichroic. H. Ambronn and others had indeed investigated extensively such properties in other substances much earlier (cf. section 29.9). The new sheets quickly found their way into some petrographic microscopes (Hallimond 1944, Hallimond and Taylor 1946).

It had long been known that polarized light could be used in stereoscopy, where a three-dimensional image appears when two pictures of the same object, taken from slightly different angles, are viewed. J. Anderton (1895) was granted British, French and U.S. patents on such a method. The pictures were projected on a screen through bundles of tilted glass plates, and observed through bulky tilted-glass spectacles. I have not found out whether Anderton‘s method was ever used in public displays. The technique was revived by the Polaroid Corporation in 1936-40 for demonstrations and military training purposes (see Grabau 1938, Lipton 2001). For a while around 1950 considerable production of photographs for three-dimensional viewing took place, followed in 1952-55 by movies (McElheny 1998, Chapter 7) to be watched through Polaroid. However, showing the movies turned out as being a difficult and costly affair, requiring special metal-coated screens (because a polarized light beam becomes greatly de-polarized upon diffuse reflection from ordinary movie screens) as well as two identical synchronized projectors. This last point caused problems, as films quite commonly got torn in those days and had to be spliced.

35.3 On polarimetry, especially alternatives to it in the sugar industry

As is clear from this account so far, polarimeters were chiefly employed in two fields: one was research on optically active organic liquids and solutions, and the other was in the sugar industry. If the demand for Iceland spar decreased after 1920 as claimed by Hagalin (1970), literature from that period ought to contain evidence of increasing use of alternative assaying methods in the commercial production and trade of sugars.

Let us start by considering how the value of raw sugar from producers was assessed before the advent of polarimeters. From the year 1861, such assessment was in the U.S. for instance founded on the belief that whiteness could be equated with purity. Glass vials containing sugars with some 25 color nuances from dark brown to white were purchased annually from a supplier in the Netherlands for the estimation of sugar colors in shipments arriving from the Caribbean. These “Dutch Standard” colors also formed the legal basis of taxation, which was no small matter as sugar provided a sizable proportion of all federal U.S. import tax revenues. The parties involved were becoming quite dissatisfied with the color method by 1880, because production methods had evolved in such a way that the color of raw sugar did not always reflect its purity. Also, sellers were tempted to add artificial coloring to their produce in order to reduce its tax value (Warner 2007). Following extensive discussions, disputes in Congress and court cases on these matters, polarimeters played an increasingly important role in U.S. raw-sugar evaluation from 1882. Some historians claim that this change contributed to New York gradually taking over from Havana as the chief center of sugar trading. The New York Sugar Trade Laboratory, founded by C.A. Browne in 1907, became much respected as an independent provider of service to the industry. The Dutch Standard colors had a legal role in quality assessment of imported sugars and molasses in the U.S. up to 1913 (Bureau of Standards 1918, p. 192); in some countries they may have been used into the 1940s (Bates et al. 1942, p. 334) or even longer.

In Europe, assaying techniques were controlled by various state bodies. German sugar producers had also joined forces to set up a sugar laboratory in 1867 directed by C. Scheibler, for research and education in the trade. Under A. Herzfeld who succeeded him in 1887, this became an Institut für Zuckerindustrie in 1904. Both men were very familiar with polarimetry, and it was almost the only method in use for measuring the sucrose content of raw-sugar products in the industry, at least until around 1900 (Fresenius 1896). However, such precise measurements of optical activity in solutions of sugar raw materials, intermediates or finished products, were not quite straightforward especially if other sugar compounds were to be measured concurrently. It was necessary to eliminate colorings, colloids and other impurities by filtering and precipitation, treat the samples with acids (later enzymes) or by heating, calibrate and adjust the instruments precisely, clean all sample vessels, and carefully control the temperature during measurements. In the analysis of sugar products, the following three types of methods may gradually have become realistic alternatives to polarimetry (see e.g. Saillard 1913, p. 34-64).

1) Many chemical methods were being developed during the late 19th and early 20th centuries (see Chapter IX of Bates et al. 1942). Most of them involved precipitation of copper compounds by reducing sugars, as first described by H. Fehling in 1848. Rolfe (1905) states that up to 30 versions of such procedures had been described, and many more appeared later. Rousset (1907) says that optical saccharimeters are almost exclusively employed in analyses of sucrose, being much more precise than copper methods. Hudson (1910a), Browne (1912) and Saillard (1913) however indicate that the latter do find some use in both scientific and industrial laboratories. According to Cajori (1922) polarimetry is the preferred method in simultaneous analysis of samples for more than one saccharide. Shaffer and Hartmann (1921) describe a convenient copper-iodine method for measuring glucose in various liquids, and Cajori (1922) introduces iodine methods for estimating other sugars. Additional examples of chemical procedures include colorimetric measurements on reaction products of sugar or other hydrocarbons and picric acid (Dehn and Hartman 1914), and a colorimetric method based on the reduction of ferric oxide (from around 1923).

2) Measurements of the density of aqueous solutions of sugar either with the aid of hydrometers invented by Brix (Fig. 27-11), Baumé, Westphal and others, or by weighing of containers of accurately known volume (pycnometers, etc.), were convenient to perform. However, the results could be affected by the presence of non-sugar compounds in the solutions, making them less reliable than those from the polarimeters.

3) After 1910, measurements of refractive indices increased rapidly in popularity as it had been demonstrated that they were superior to density measurements. The refractometry also required only a few drops of solution, and it was not necessary to carry out precipitations as in the polarimetric method. “When by experience there is a close correlation between sugar concentration and total content of dry matter, the refractometer is much to be preferred to the polarimeter….” (Löwe

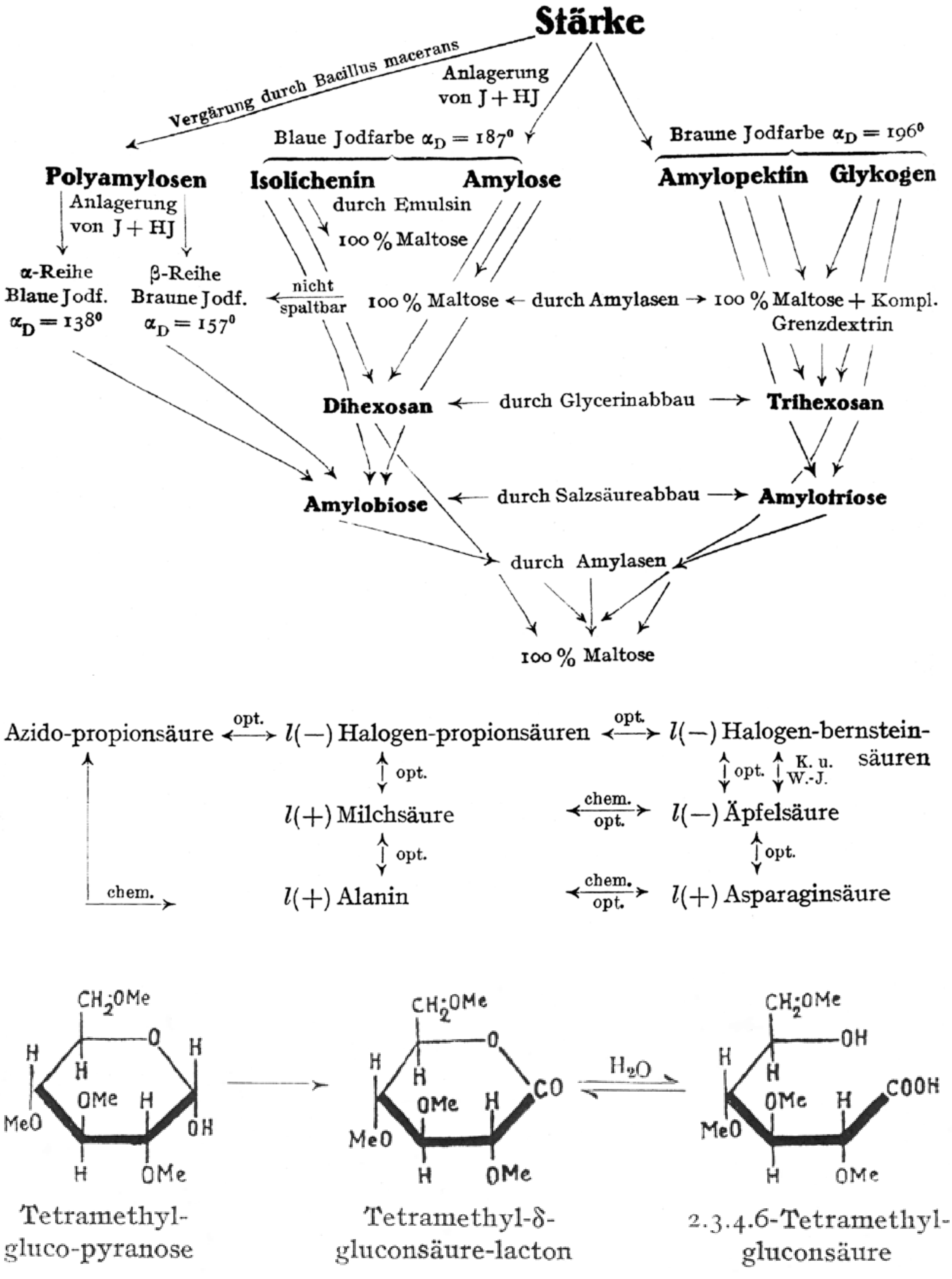

Figure 35-1. *Top:* A scheme from Pringsheim (1924) demonstrating the possibility of complete conversion of starch to maltose by hydrolysis and enzyme action. At that time, observations of optical activity had for 90 years been an important method in research on starch and its breakdown products. *Center:* A scheme from Freudenberg and Lux (1928) showing close structural correspondence between two amino acids and other organic acids. "opt." indicates similarities deduced from polarimetric measurements. *Bottom:* A diagram from Haworth's (1932) review, showing how methyl groups attached to the glucose molecule aided in elucidating its configuration.

1925). In the 1920s, refractometers were also built into the walls of processing pans in sugar factories (Hinton 1930).

4) In tests on urine, the decrease in its density upon fermentation, or the volume of carbon dioxide produced, was often used as a measure of glucose content (e.g., Struers 1925, p. 415-416) but this method was time-consuming and inaccurate. Volumetric carbon dioxide measurements were also commonly made in scientific and technical research on various fermentation processes.

It is possible that by the early 1920s the above alternatives had collectively gained a wide enough application to reduce somewhat the need for polarimetry in the sugar and food industries and in the sugar trade. A partial explanation may thus be found for the claim in Hagalin's (1970) book mentioned in the first paragraph of the present section. However, statements like this one from the U.S.: "...every sugar-house uses the [polariscope] for routine control work of its manufacturing processes." (The Cotton Oil Press, Chemists' Section 4, p. 43, 1921) show that polarimeters still were important. The 1927 Standards Yearbook of the U.S. National Bureau of Standards asserts that "...practically all raw sugars, as well as many other sugar products, are bought and sold upon the basis of their purity as determined by the polariscopic test... ". It is also clear from this Yearbook and from U.S. Customs regulations on sugar tariffs issued both in 1931 and 1937, that polarimeters/saccharimeters with Nicol prisms and quartz plates played a key role in sugar taxation. Singerman (2007) even states that polarimeters of the ingenious type designed by Bates (1908) were the main instruments used by U.S. Customs for sugar measurements in the 1940s. With regard to imports and production of sugar in the U.K., one may similarly conclude from perusing The Times newspaper of London from 1920-32 that polarimetry was still being depended upon in the trade.

In research on the structure of optically active compounds and their reactions, polarimeters containing Iceland spar prisms continued to be indispensable in the 1920s and beyond. Thus, Fig. 35-1 shows three diagrams published in 1924-32, based largely on polarimetric measurements. One is a scheme of methods for the quantitative degradation of starch to maltose, another reveals close similarities between certain organic acids, and the third illustrates the use of glycosides in work on the detailed configuration of the glucose molecule.

36 X-rays and other research on radiation and materials, 1895-1930

36.1 W.C. Röntgen

From 1913, calcite crystals from Iceland were given challenging tasks in a new and important field of the physical sciences, namely the use of X-rays in research on the submicroscopic structure of crystals and of atoms. Their discoverer in 1895, W.C. Röntgen (see Appendix 5) was himself interested in crystallography, and he had also made valuable observations with Nicol prisms. These included studying the Kerr and Pockels electro-optical effects (see chapter 23) and demonstrating that the Faraday magneto-optical effect could take place in gases (Kundt and Röntgen 1879a,b). Röntgen (1896) mentions in his first paper on the rays named after him, that he had found Iceland spar to be transparent to them and that they caused luminescence in these crystals. He considered that the rays might be a form of longitudinal waves. In this paper he also reported measuring the fluorescence of another material with the aid of a Weber photometer; however, it is not clear whether it was the 1891-model of that device (containing Nicol prisms, see section 29.4) or an older version. Later, Röntgen (1907) tested whether his X-rays caused any changes in the electrical conductivity of calcite. Some other scientists attempted using Iceland spar in research on radioactivity which was discovered in 1896, but it turned out not to have any notable properties in that respect.

36.2 Scattering and diffraction of X-rays; the structure of calcite

C.G. Barkla (1904) published the first observations on scattering of X-rays (from the particles of solid matter) which showed that they had polarization properties like light, cf. the drawing in Fig. 27-1. In the following years H. Haga, E. Bassler, J. Herweg and others confirmed that they were waves, and estimates of their wavelengths were obtained from A. Einstein‘s quantum hypothesis. However, no accurate means of analysing X-ray emission spectra were available.

In 1911 it became clear that atoms were composed of very small nuclei and electrons orbiting around them. A young physicist, P.P. Ewald, had selected as his doctoral thesis project to study theoretically how the atoms in crystals could cause double refraction of light. He asked another physicist, M. Laue who was familiar with both wave optics and crystallography, what would happen if light waves impinging on a crystal had a wavelength of similar magnitude as the distances between its atomic nuclei. Laue then realized that the crystal would affect the X-ray waves in a similar way as a diffraction grating affects visible light. Laue and his collaborators demonstrated this experimentally in early 1912 (Fig. 36-1), attracting much attention. It should be noted here

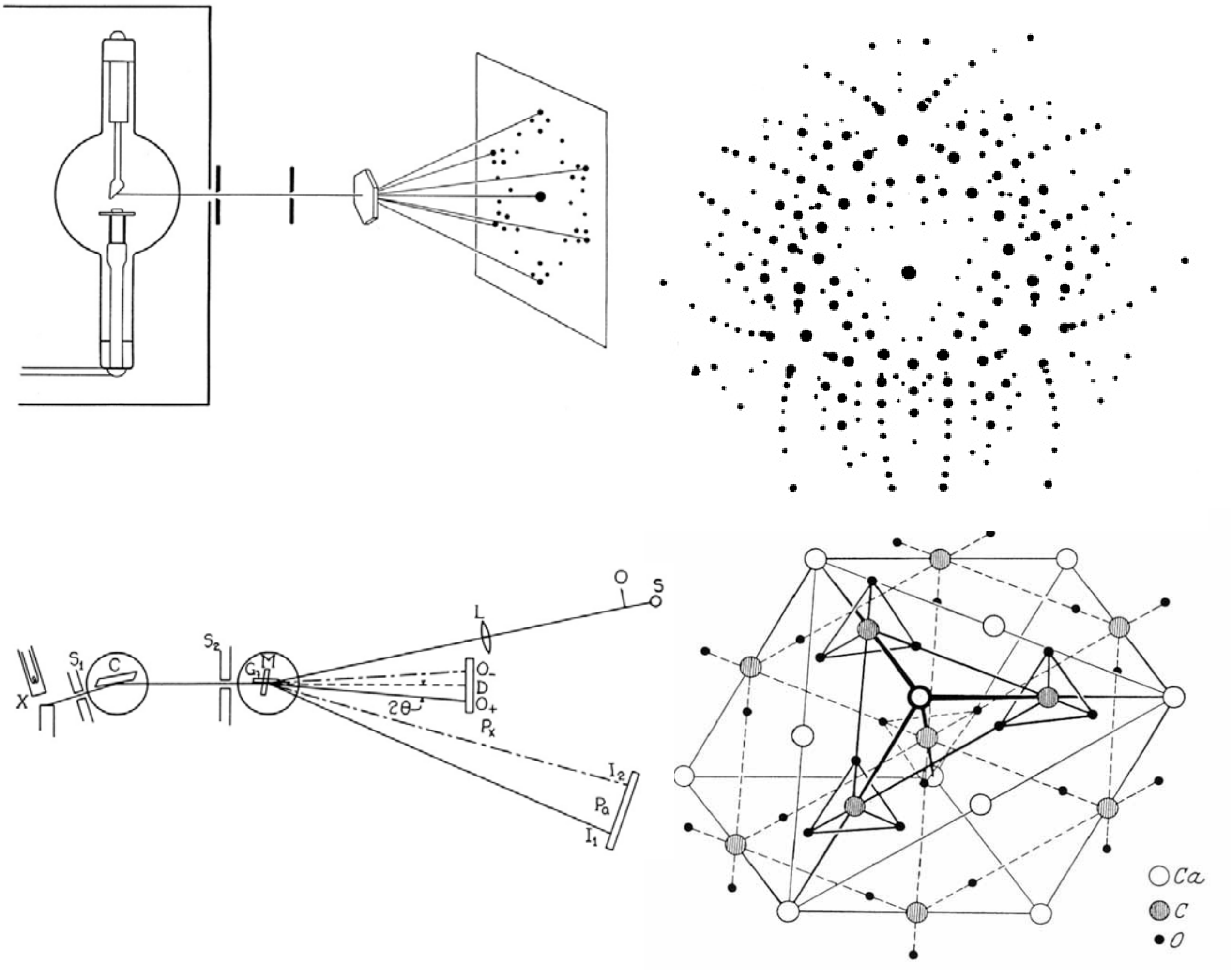

Figure 36-1. *Top:* In 1912 M. v. Laue sent a narrow beam of X-rays through crystal plates. On development of a photographic negative behind the plates, it was seen that the rays had been deflected into specific directions, because the crystals act like a three-dimensional diffraction grating. On the right, the Laue pattern for calcite (from Rinne 1922b) is shown; Iceland spar was probably among the first crystalline materials tested with this technique. *Bottom left:* The arrangement of the atoms within a crystal structure may be found by mathematical processing of X-ray patterns like those above. However, better results are obtained if the rays are reflected from a plane surface of the crystal C, and angles like θ are measured accurately. The diagram illustrates the setup of Wadlund (1928) which gave a precise value of the spacing of atomic planes in calcite (possibly from Iceland). From that value, Avogadro's number could be derived. G is a diffraction grating for the X-rays. *Right:* A drawing by Ewald (1923) of the fundamental unit cell of a calcite crystal; a similar one was published already by Bragg (1914).

that the various expressions describing these phenomena, have not always been used in a transparent way in the literature. Thus, in the case of visible light "diffraction" usually refers to the bending of the light around an extended obstacle assumed to be made of an opaque material continuum, whereas in X-rays both this term and "reflection" often refer to situations that might be more appropriately called "combined scattering" from many particles.

By measuring the directional change of a parallel beam of monochromatic X-rays upon transmission through, or reflection from, a crystal plate (Fig. 36-1), their wavelength could be found in terms of some characteristic interatomic distance. The interaction process was in this case much more complex than in an ordinary grating, because the deflected X-rays emanate from a three-dimensional network of particles rather than from a flat surface with parallel equidistant lines. In 1913-17 P.P. Ewald published his theoretical investigations on the matter, introducing various new

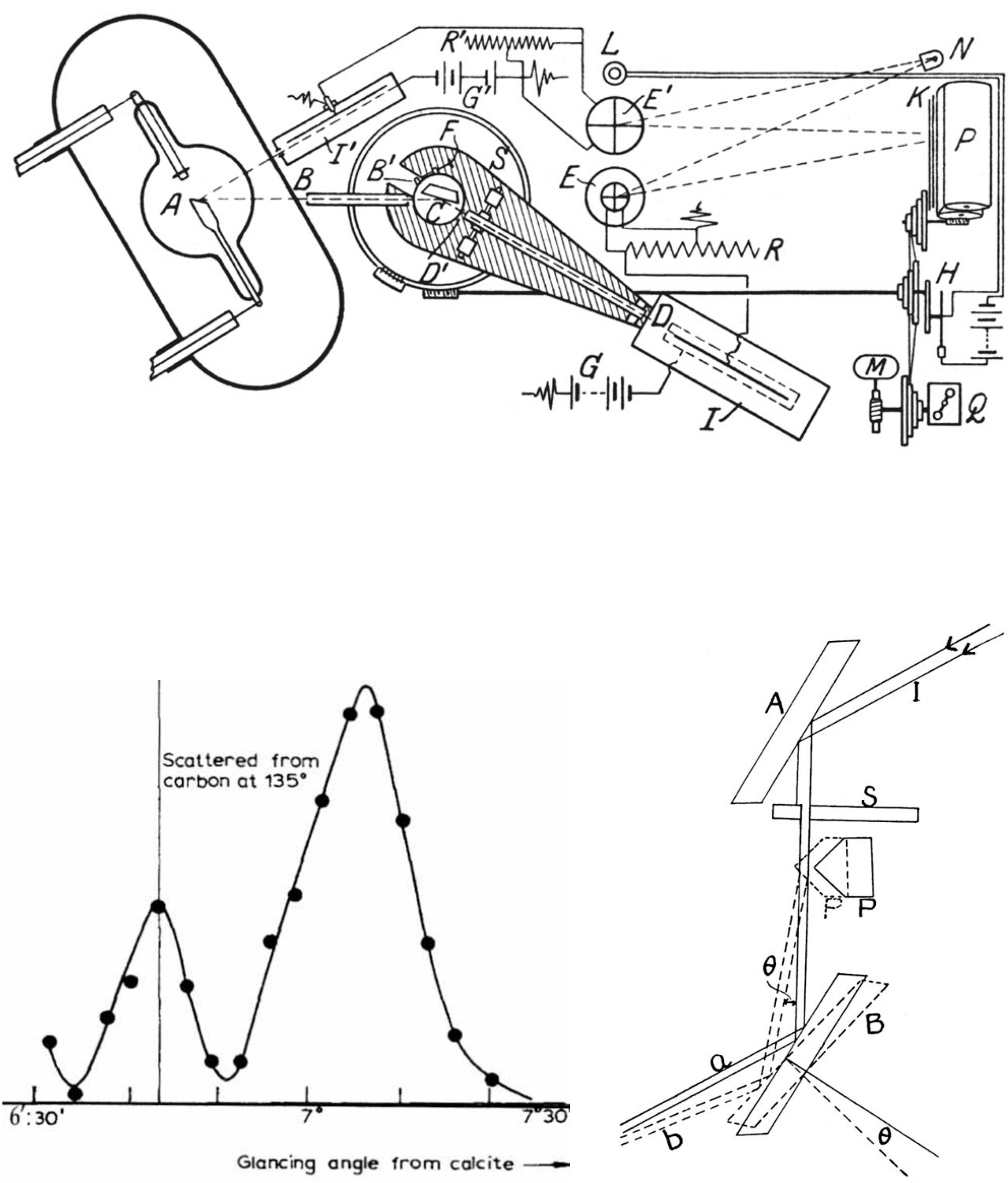

Figure 36-2. *Top:* The directional change of X-rays on reflection from a crystal C was often measured by means of an ionization chamber I on an arm which could be rotated around C. The figure shows the instruments of A.H. Compton (1916) who often used Iceland spar in his spectroscopic work. From Siegbahn (1924). *Bottom left:* Compton (1923) found that if a narrow X-ray beam was scattered by for instance a lump of graphite, the wavelength of a part of the deflected beam increased (right-hand peak). This was caused by collisions between the rays and electrons. It agreed with the quantum theory of A. Einstein which predicted that individual photons of radiation carry momentum. The change in wavelength was 5% or less, and the experiment called for good analyzing crystals like calcite. The graph is from Compton's Nobel lecture in 1927 (www.nobelprize.org). *Right:* Very high resolution of X-ray directions and wavelengths could be obtained by letting the rays impinge on two parallel surfaces of the same split crystal, here A and B of Iceland spar. If the width of the X-ray beam was limited by a narrow slit in the screen S, the wide aluminium wedge P could be shown to cause a "refraction" of the beam. The angular change was only a few seconds of arc.

concepts. With extensions from e.g. C.G. Darwin, M. Laue and C.W. Oseen, this came to be called "the dynamical theory". Their remarkable achievement had one main drawback: it only applied to crystals that were perfectly regular in their structure. See more on this in section 36.3. Simultaneously, experimental techniques were improved from the original methods of Laue and others, particularly by W.H. Bragg and his son W.L. Bragg. The samples used were either individual crystals or powdered ones. As almost all of these were quite far from being perfectly regular, an interpretation procedure appropriate for them was developed and used in the following decades under the name of "the kinematic(al) theory".

Calcite was one of the first crystals on which X-ray diffraction was tested, and it turned out to be particularly straightforward to estimate the main features of its structure from the deflection angles (W.L. Bragg 1913, 1914). As remarked by W.H. Bragg (1915, footnote p. 268). "…no case has yet occurred in which the opportunities for comparison are so direct as in calcite, with its different sets of equally spaced planes". Schiebold's (1919) doctoral thesis dealt with the structure of calcite, from X-ray observations on a glass-clear Icelandic specimen of about 20 mm size. He also looked into aspects like twinning and glide planes (cf. section 21.3).

In the interpretation of the complex diffraction patterns in these early years, it was also of great help to have good crystals of isomorphous crystals such as magnesium, iron, and manganese carbonates for study along with those from calcite (see e.g. W.L. Bragg 1914, Jaeger and Haga 1916, Wyckoff 1920, 1922). Therefore, the precise geometrical arrangement of the atoms in calcite was known quite early (see Ewald 1923, Fig. 36-1). With that knowledge, physicists could start figuring out how this arrangement was connected to the various physical properties of calcite. Thus, W.L. Bragg (1924) suggested reasons why the relative positions of the calcium, carbon and oxygen atoms in calcite and aragonite (both having the chemical formula $CaCO_3$) might explain their unequal degree of double refraction.

Later researches (see e.g. Wahlstrom 1969) have revealed that the unusual refraction properties of calcite are related to the planar shape of the CO_3-groups. In an analogous way, the reason for the easy cleavage of Iceland spar along its three main directions is due to unusually weak forces between atoms across those planes (Beckenkamp 1923, and other authors). This fact was of some significance in X-ray work, because the stresses arising in cleaving or in the polishing of surfaces can cause deformation of the adjacent molecular layers. Bragg and Chapman (1924) made a reasonably successful attempt at explaining why the crystal angles vary from one trigonal metal carbonate to another.

Various studies were made on X-ray diffraction from optically active crystals like quartz and cinnabar, in order to aid theoreticians' efforts in elucidating the causes of this property (see e.g. Born 1935).

36.3 The role of Iceland spar as a yardstick for X-rays

Soon after 1913 it was realized that the laboratories investigating X-rays needed a common easily accessible and accurate reference method for measuring the X-ray wavelengths employed in crystal-structure determinations. This was also necessary in order to chart accurately the complex emission and absorption spectra of the elements, see section 36.5. At that time, their wavelengths were considered to be much too short for analysis by gratings (i.e. metal plates with parallel scratched lines) to be feasible.

In the search for such a yardstick, the first choices were simple cubic two-element crystals like NaCl (rock salt), KCl (sylvin) and ZnS (zinc blende). It is easy to compute their interatomic distances (grating space) if the crystal density and the atomic weights of the elements are known.

These materials, however, did not perform as well as calcite. Thus, Compton (1916, see Fig. 36-2) speaks of "extremely perfect faces" of calcite crystals, later reiterating (Compton 1918) that "… calcite is more perfect and is less apt to contain inclusions than rock-salt". The salt gave stronger X-ray reflections than calcite, and some researchers learned to select adequate specimens of it (e.g., Siegbahn 1919, p. 605). On the other hand it had an uncomfortably high thermal expansion coefficient, and therefore calcite was preferred by many from around 1919 as a length standard for rays having relatively short wavelengths (< 0.5 nm). Siegbahn (1933) in fact became disillusioned with rock salt when he found in his improved equipment that "it was impossible to obtain sharply defined spectral lines" with it. He adds that calcite crystals are "the most frequently used ones for precision measurements as well as for studies on the structure of spectral lines". Here he was no doubt referring largely to samples of Iceland spar (from Iceland, Montana, Spain, Argentina, etc.) that had been recovered from drawers in research institutes and museums and enlisted in the service of X-ray work. Some material may also have been obtained from dealers and instrument makers.

In some important investigations of X-ray diffraction, much improved resolution could be attained by using two analyzing crystals in succession, having exactly parallel surfaces (Fig. 36-2 bottom right). In this method which was invented by A.H. Compton in 1917 and became "an invaluable tool" in the field (according to Parratt 1932), calcite crystals were mostly employed. For instance, Davis and Stempel (1921; see Hildebrandt 1995) record that they split "a clear specimen of Iceland spar" for this purpose, while Wagner and Kulenkampff (1922) state that in rock salt it is "most difficult…to attain good cleavage planes". Other relevant opinions which may be quoted here are: "The calcite possesses approximately the same dispersing power as rock salt, and good specimens of it are easily obtained" (Siegbahn 1924, p. 85), and "…calcite crystals are much more perfect than…rock salt" (Compton et al. 1925), and "…for calcite forms very perfect crystals" (Havighurst 1926). Cooksey and Cooksey (1930) were given "a nearly perfect specimen of Iceland spar" from the Yale University collections for use in a new determination of its grating space; they measured the deflection of a beam with an accuracy better than 0.1" (see also a note under Havighurst 1926 in the reference list). Some scientists such as Wyckoff (1926) considered quartz to be an alternative as a precise wavelength standard, whereas others had less faith in it due to "variation in [its] internal structure" (Tu 1932).

Calcite therefore became one of the most commonly used crystals in precision X-ray spectroscopy for decades (see e.g. Wadlund 1928, Fig. 36-1, Bearden 1931b, 1935, Birge 1941). Bearden used for his measurements two crystals "split from a block of Icelandic calcite" and Cork (1932) claims that the most accurate values of X-ray wavelengths up to at least 5 Å (0.5 nm) "have been obtained almost entirely by the use of calcite crystals". At the high-energy end of the scale, attempts were made to measure wavelengths less than 0.1 Å in spectra of γ-rays from radioactive elements (Steadman 1930). Ievins and Straumanis (1940) recommend calcite for X-ray work, rock salt being "unsuitable for precision measurements because of its mosaic structure". Batuecas (1950) states that in calcite the density, grating space, and geometrical properties are known with more accuracy than in any other crystal. Yarwood (1963, p. 633) informs us that in the standardization of X-ray wavelengths after 1930 calcite was preferred to rock salt because the hygroscopic nature of the latter spoils its surface properties. Bearden (1965) expects that calcite is still the most common analyzing crystal. However, at that point in time instrumentation had reached sufficient precision to determine that grating space values varied between individual calcite specimens by amounts of the order of 1/100,000. This was inconvenient and physicists therefore searched for better reference standards, such as the use of particular very narrow X-ray spectral lines (DuMond 1959). A K-line from wolfram was eventually selected as a primary standard around 1970.

Until around 1932 the above-mentioned "dynamical theory" of X-ray diffraction was developed further, although no crystals were found to be of sufficient perfection to enable testing of its predictions. However, this was eventually possible "thanks almost exclusively to the best specimens of Icelandic calcite" as first discovered by Allison (1932) and recalled by G. Borrmann (1988, see also in Brill 1962 and Hildebrandt 1995). Studies on for instance diamond, zincblende and grown rock salt also provided some useful evidence. Later, Borrmann made important discoveries regarding the interference of X-rays around 1940, by their transmission through "a small piece of Icelandic calcite" (Hildebrandt 2002) which he had procured from a mineralogical collection. Borrmann in fact found that much more of the radiation passed through the crystal in a Laue-type experiment than one could expect by comparison with other crystalline materials. Due to circumstances in the World War his results were not published at that time, but Borrmann (1950) continued his work on the same spar piece and other crystals from 1948. He then made further remarkable findings regarding the dynamical theory, which others had difficulties in believing until they were confirmed (Borrmann et al. 1955, Fig. 36-3) by measurements on "a 32 mm thick Icelandic calcite plate of the highest perfection." (Hildebrandt 1995). Renninger (1955) who also made experiments on Borrmann's samples to confirm predictions of the dynamical theory, states that calcite is still the most perfect crystal available.

Attempts to grow large pure crystals of for instance rock salt were not successful until around 1925 (see D.S.B. on R. Pohl). After 1950 very pure crystals of aluminium, silicon, germanium and other materials were produced. In the 1960s such man-made specimens had reached sufficient perfection for them to be used in tests of the dynamical theory, encouraging its further development. The new materials could also replace Iceland spar in the role as an X-ray wavelength standard. Out of these materials, the semiconductors silicon and germanium had very valuable properties, as tiny amounts of impurities can greatly influence the energy levels available for their electrons and therefore change their electrical conductivity. The knowledge which had been obtained by applying the dynamical theory to X-ray diffraction in Iceland spar and other near-perfect crystals, improved understanding of the nature of these semiconductors and thus hastened the electronics revolution in the second half of the 20th century. It may also be concluded from the literature on these subjects, that the dynamical theory played a significant role in the revolution itself, because it was used in the interpretation of data from X-ray analyses (carried out both by conventional means and by synchrotron radiation from particle accelerators) on many other perfect man-made crystals. These included semiconductors, piezoelectric crystals like quartz, ferroelectric crystals, photoelectric materials, magnetic materials, crystals for use in lasers and in light modulation, etc.

Some other important stages in X-ray studies were reached with the aid of calcite crystals. For instance, Siegbahn (1921) used calcite to confirm inferences which his collaborators had made from X-ray diffraction results on gypsum, indicating that refraction was taking place at the surface of these crystals. This interpretation was supported by Davis and Terrill‘s (1922) observations on an Iceland spar crystal. The results agreed with theoretical calculations on the interaction of the rays with electrons; the refractive index of all materials for X-rays only differs from 1 by some parts per million. Actually it is less than 1, which opens up possibilities for the total reflection of X-rays (e.g. Kiessig 1931, Fig. 36-3); this has in recent years been utilized in various ways. Later, the directional change of X-rays in metal prisms was measured directly; it is a few arc-seconds. In one such experiment (Davis and Slack 1926) the measurement was made with the above-mentioned double spectrometer of Davis and Stempel (1921) containing two halves of a recently split Iceland spar crystal (cf. Fig. 36-2 bottom); the authors conclude that the high quality of the surfaces was an important factor in their success. Still more precise results on the refractive index of calcite were obtained in a new spectrometer designed by Compton (1931) with two crystals "freshly cleaved from an optically perfect sample of Iceland spar". In the first test of the effect of low temperatures on X-ray reflection coefficients (for comparison with the quantum-mechanical theories of P. Debye and others on lattice vibrations), Nies (1926) employed “a transparent cleavage piece of Icelandic calcite”.

Around 1924 L. de Broglie suggested that material particles could behave like waves. Experiments to demonstrate the wave-like properties of electrons, by scattering from metal crystals, began yielding positive results in 1927. It is more difficult to use insulators in this sort of work because they become charged, but Kikuchi and Nishikawa (1928) were the first to detect diffraction effects in fast-moving electrons when interacting with a cleavage face of calcite. Dempster (1929) succeeded in obtaining diffraction patterns from protons, also using calcite.

By 1936 people were directing neutron beams towards samples of liquids and solids, and observing the scattering of the neutrons. This technique has been important in investigations of material structure. It was also found that various nuclei absorbed neutrons, some becoming radioactive, but these processes were very dependent on the speed of the neutrons. Calcite was one of the crystals employed in pioneering studies of that kind, see e.g. Rasetti (1940) who used “a perfect specimen of Iceland spar” in a part of his project. Interest in these matters greatly increased when nuclear energy was being harnessed, as neutron capture by uranium nuclei could bring about fission. Thus Fermi and Marshall (1947) investigated the scattering of neutrons on their way through calcite and many other materials, and Havens et al. (1948) borrowed for similar research a large Nicol prism whose owner many decades before may have been J. Tyndall.

36.4 Distances within crystals

Computations of the fundamental interatomic distance d in all crystalline materials depend on the value of Avogadro’s number, i.e. the number of atoms in one mole. This number can be obtained by dividing the amount of electrical charge in one gram-equivalent (called Faraday’s constant) by the numerical value of the electron charge e. The latter was for a long while only known from measurements by R.A. Millikan, published in 1910-17. In estimating it, he made use of the velocity of oil drops falling through air, and the results only had sufficient accuracy to express d with four figures. In rock salt for instance, d was determined to be 0.2814 nm. Relative measurements in X-ray spectroscopy had however by 1924 reached six-figure accuracy (Siegbahn 1924, p. 20). For inter-laboratory comparisons, Siegbahn therefore introduced a new unit defined on the basis of the d of Iceland spar. This he called the X-unit and it was widely used until an alternative length standard for X-rays was adopted around 1970 as mentioned in the preceding section. For instance, the table of peak wavelengths in Fig. 36-3 is given in X-units (which were later named after Siegbahn himself).

In the year 1925 it was possible for the first time to measure X-ray wavelengths by reflection from a ruled metal grating, under incidence angles exceeding 89° (see Yarwood 1963). The results did not quite agree with those expected. In a doctoral thesis in 1928, E. Bäcklin pointed out the possibility that Millikan´s e-value might be too low by about half a percent. This discrepancy was in 1935 traced to an incorrect formula for the viscous resistance of air to the motion of Millikan’s oil drops. The improved derivation of e had the effect of changing e.g. the rock-salt d-value from 0.2814 to 0.28197 nm. In the following years therefore, a new way of estimating e was attempted, as it is equal to one Faraday of charge divided by Avogadro‘s number. The latter could be found from the molecular weight and density of calcite after its d had been found by comparison with a ruled grating (see Bearden 1931a, 1935). Bollman and DuMond (1938) studied in particular on two Iceland spar specimens (provenance not given) whether the very thin surface layer involved in reflection experiments had the same properties as their bulk substance. This turned out to be the case, “…furnishing clinching justification for the validity of the well-known precise determina-

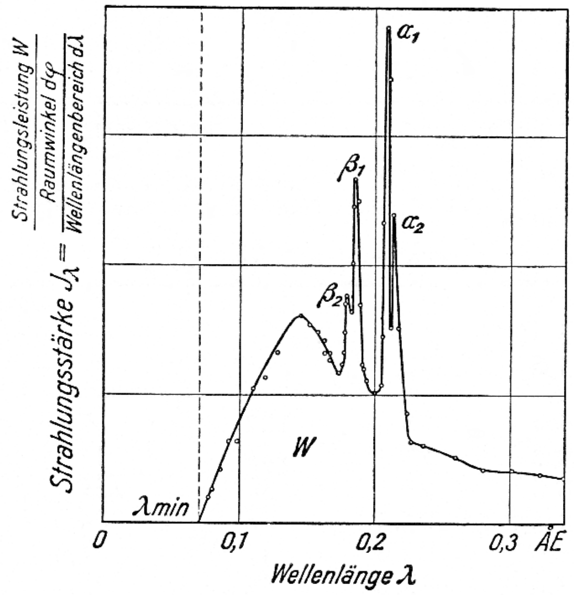

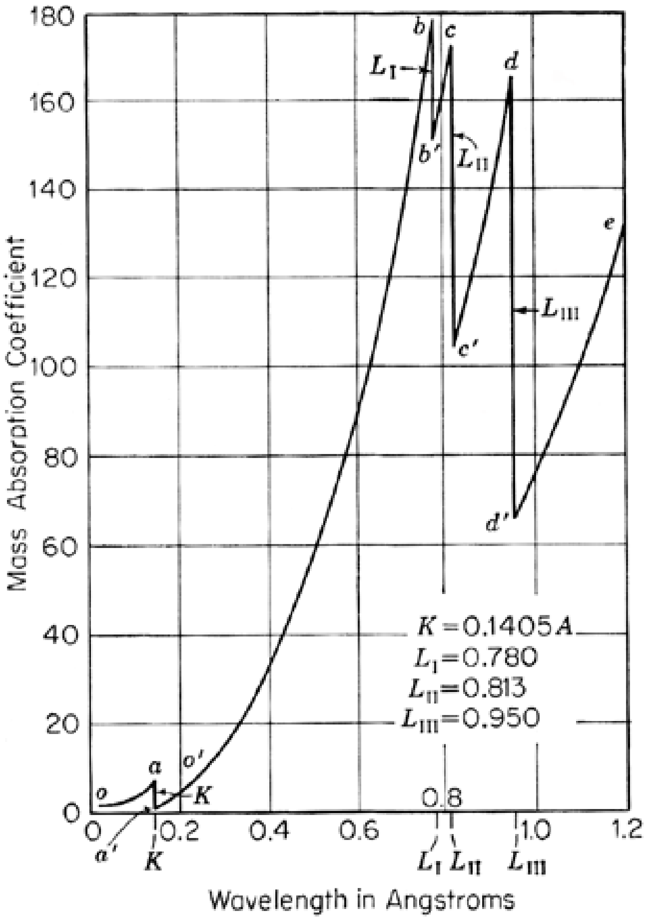

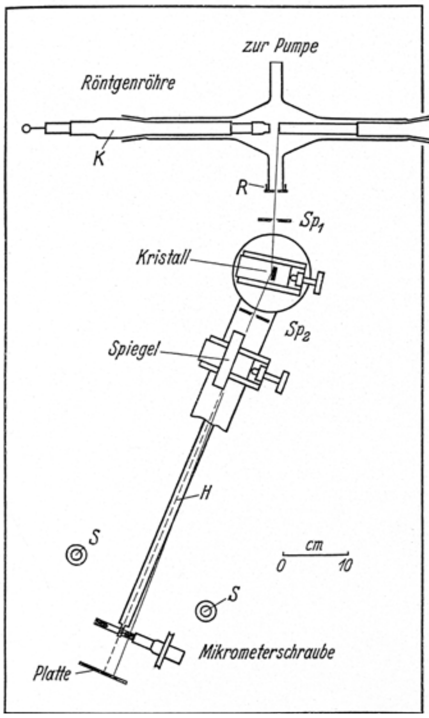

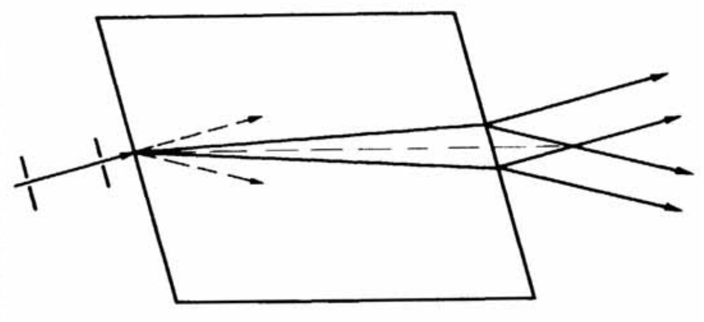

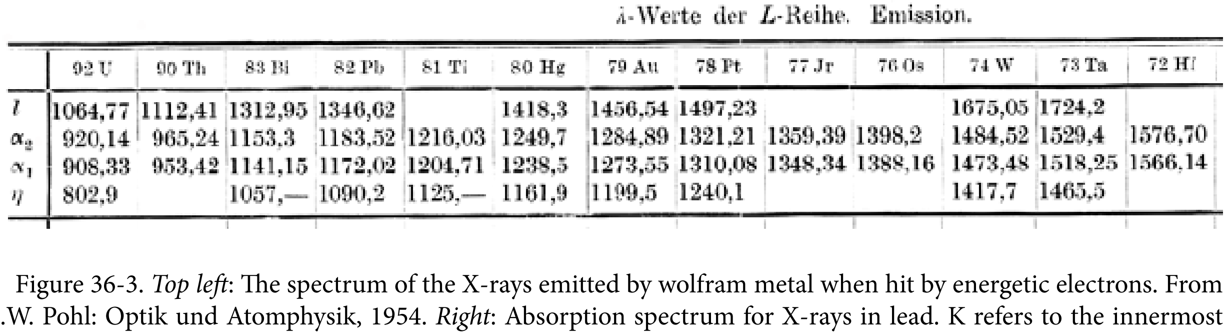

λ-Werte der *L*-Reihe. Emission.

	92 U	90 Th	83 Bi	82 Pb	81 Ti	80 Hg	79 Au	78 Pt	77 Jr	76 Os	74 W	73 Ta	72 Hf
l	1064,77	1112,41	1312,95	1346,62		1418,3	1456,54	1497,23			1675,05	1724,2	
α_2	920,14	965,24	1153,3	1183,52	1216,03	1249,7	1284,89	1321,21	1359,39	1398,2	1484,52	1529,4	1576,70
α_1	908,33	953,42	1141,15	1172,02	1204,71	1238,5	1273,55	1310,08	1348,34	1388,16	1473,48	1518,25	1566.14
η	802,9		1057,—	1090,2	1125,—	1161,9	1199,5	1240,1			1417,7	1465,5	

Figure 36-3. *Top left*: The spectrum of the X-rays emitted by wolfram metal when hit by energetic electrons. From R.W. Pohl: Optik und Atomphysik, 1954. *Right*: Absorption spectrum for X-rays in lead. K refers to the innermost orbit of electrons, and L refers to the next orbit. From F.K. Richtmyer et al.: Introduction to Modern Physics, 1955. *Center left*: Setup for observing total reflection of X-rays in a film of nickel. The crystal is calcite (Kiessig 1931). *Right*: Computed fanning out of a narrow beam of X-rays in a perfect crystal of calcite (quadruple refraction; Borrmann et al. 1955, simplified). *Bottom*: Part of a table of wavelengths of L-series peaks in the emission spectra of several metals (Siegbahn 1924), in X-units.

tions of e by Bragg reflection from the surface of macroscopic pieces of calcite". According to Birge (1941, p. 119) the oil-drop method was still not yielding a sufficiently precise value of e, mostly because of uncertainties in the above-mentioned air resistance.

The electron charge was involved in the determination of some other quantities. For instance, the electron mass m could not be measured directly, whereas various experimental methods were available to find the ratio e/m accurately from the motion of free electrons in electric or magnetic fields. In this way, Iceland spar contributed to improvements in our knowledge of the electron mass.

36.5 The fundamental constants of physics; atomic structure

Iceland spar had further important roles in connection with X-ray research. One had to do with precision measurements of the constant h which is fundamental to the quantum theory introduced by M. Planck in 1901. h is a mechanical quantity but no purely mechanical methods were available to measure it directly. Instead, the ratio h/e was obtained from measurements on electronic processes. After the appearance of Einstein's (1905a) hypothesis that light of frequency f has some properties of particles carrying energy quanta of magnitude h.f, scientists attempted to use the photoelectric effect to estimate h. However, in the beginning these experiments suffered problems due to various disturbing factors.

R.A. Millikan succeeded in eliminating the main error sources in a famous series of measurements on the photoelectric effect in alkali metals, published in 1914-16. His result agreed reasonably with that deduced by Planck from the spectrum of black-body radiation. It is not as well known today, that at a similar time very satisfactory values of h were being obtained from the "inverse photoelectric effect" of X-rays. Here, one determines the minimum voltage difference V needed for the acceleration of electrons, in order to create X-rays of a given wavelength (λ_{min} in Fig. 36-3) upon collision with a metal surface. In short, $e.V = h.f = h.c/\lambda_{min}$ where the wavelengths λ were measured with a calcite crystal in the earliest studies by Duane and Hunt (1915) and Webster (1916). As is evident e.g. in Millikan's (1917a) conclusions, the close similarity of h-values obtained by very different methods provided strong support for the new quantum approach to physics in the 1910s and 1920s. At that time the quantum theory was being developed rapidly, while some scientists (including Millikan himself, cf. his Nobel lecture in 1923) considered its foundations to be somewhat insecure.

Out of six published series of X-ray measurements of h quoted by Siegbahn (1924, p. 201), the above-mentioned two and two later studies used calcite as a wavelength standard. At that point, the oil-drop value of the electronic charge governed the accepted value of the grating space of calcite and other crystals, so that a systematic error in e could affect the experimental value of h in more than one way. All the six X-ray series and most of those in Siegbahn´s list employing other methods yielded h in the range $(6.50\text{-}6.58).10^{-27}$ cgs units. As pointed out e.g. by Millikan (1917a,b) and reiterated by Bollman and DuMond (1938), the electron mass m, its charge e, the speed of light c and Planck's constant h all enter into the so-called Rydberg's constant R_∞. It has the dimension 1/length, and it can be found quite accurately by measurements on the spectra of hydrogen and helium with the aid of ordinary diffraction gratings. Therefore, the agreement between values of R_∞ obtained in this direct way and indirectly from the various measurements of h and other quantities, provided a further test of the quantum theory. Precision determinations of these fundamental constants gradually converged. The source of a bothersome 0.2% systematic error (unrelated to the analyzing crystals) in X-ray spectrometry values of the quantity h/e was finally eliminated in the early 1940s, see Panofsky et al. (1942) who used calcite in their determination. Birge (1941) and Bruhat (1942) therefore consider the consistency of the fundamental atomic constants to be quite satisfactory, but improvements of experimental techniques continued. Thus, Aminoff (1946) suggested a way to increase the X-ray resolution provided by Iceland spar, and Bearden and Schwarz (1950) found h/e to six figures in a new spectrograph employing an Iceland spar crystal (previously used by Bearden 1930, probably Icelandic).

As soon as physicists began studying the emission and absorption X-ray spectra of the elements, they found that the former are partly composed of individual lines, partly of a continuous band that stops abruptly at a characteristic wavelength. Various rules regarding the wavelength values in the line spectra were proposed, one of the first, simplest and most important being that of H.G.J. Moseley. It stipulates that the shortest X-ray wavelength radiated by an element (λ_{min} in Fig. 36-3 bottom left) with an atomic number Z is proportional to $1/(Z-1)^2$. This rule was originally found in 1913 from measurements with a potassium ferrocyanide analyzing crystal on metals having Z = 13 to 47. Moseley's rule on this so-called K-series of X-rays was subsequently confirmed by further spectrometric work on heavier elements where both calcite, rock salt, gypsum and sucrose were employed (cf. chapter IV of Siegbahn 1924). The elements emit the K-rays when electrons fall down to their innermost allowed orbits. Calcite was also used in part in the 1920s for the charting of the complex L- and M-series of X-rays from the heavy elements (Fig. 36-3 bottom), where the availability of a good analyzing standard was clearly much appreciated. Thus, Coster (1921) used a "very beautiful" calcite crystal in his equipment, and Kellström (1927) had at his disposal "two different crystal specimens of excellent quality".

The absorption spectra of the elements (Fig. 36-3 top) which were no less interesting than their emission spectra, were also in many cases investigated with the use of calcite (e.g., Duane and Hu 1919, Lindh 1925, Hahn 1934 with two very large calcite crystals). These edges appeared when X-ray photons had just enough energy to knock electrons out of the inner orbits. Their fine structure was in some respects different from that of the emission spectral lines. With improved instrumentation it was found that the positions and shapes of the absorption edges depended to a measurable extent on the chemical valency of the absorbing element, also even its crystal structure and temperature (Hendricks and Wyckoff 1927, Hanawalt 1931, and many others).

The absorption of X-rays of a single wavelength by a sample of an element is in part due to its electrons being excited to higher energy levels. That sample therefore emits fluorescence X-radiation of various longer wavelengths, characteristic of that element. Measuring the intensity of this secondary radiation is an obvious basis for a method of chemical analysis. Iceland spar makes an occasional appearance in early efforts to develop such a method. Thus, Glocker and Frohnmayer (1925) used Nicol prisms in apparatus to measure the darkening of photographic plates, when X-rays were employed in making quantitative estimates of the content of some foreign elements in glass and minerals. Hevesy and Böhm (1927) measured small amounts of tantalum and hafnium in several minerals, by means of an X-ray spectrometer equipped with a calcite crystal. C.H. Eddy and his co-workers had also calcite in their X-ray equipment when attempting to detect minor constituents in samples of metals (e.g., Eddy et al. 1929). They claim being able to measure concentrations of trace elements down to 0.00001%. For technical reasons, the method did not reach a practical stage until much later.

In the 1930s the above-mentioned double-crystal spectrometers and others using calcite were improved in order to study in detail the widths and shapes of the individual X-ray spectral lines (e.g., Williams 1931, Richtmyer et al. 1934, Fig. 36-3); these properties are related to transition probabilities between energy levels. It was important to carry out such analyses with great precision, for comparison with the quantum theories of N. Bohr, A. Sommerfeld, G. Wentzel, W. Kossel, L. Vegard, R. Kronig, J.R. Oppenheimer and others on atomic structure.

In the period 1920-50, X-rays continued to be used by many laboratories in finding the relative positions of atoms in innumerable inorganic and organic crystals, and in investigating various processes involving these compounds. I have not checked whether the use of calcite in that field had any decisive effect on its development.

36.6 The Compton effect

A.H. Compton, some of whose research has already been referred to, surmised that according to quantum theory and the principle of conservation of energy, the wavelength of an X-ray beam ought to increase after collisions with electrons. He made an effort to verify this by measuring such changes in a beam scattered from a piece of graphite (Fig. 36-2 bottom left). They were quite small, and it was therefore advantageous to analyze the rays with a crystal which reflected them without appreciable angular broadening. In his first paper describing his experiments, Compton (1923) says: "Using a crystal of calcite, this made possible a rather high resolving power even in the first order spectrum.". Others studying these changes in the following couple of years also used calcite crystals, such as Ross (1923), Hagen (1925) and in particular W. Duane who was already well known for his achievements in the field. Duane had originally not been able to reproduce Compton's results, and was among those who considered his ideas to be unrealistic. However, he was converted to Compton's views (Allison and Duane 1925) after repeating his experiment with improved equipment and a 9-cm long calcite crystal.

The increase in X-ray wavelengths on collisions with electrons were consequently called the Compton effect, see Appendix 5. It may be concluded from its existence that light quanta carry a linear momentum in agreement with the quantum theory of Einstein (1905a); this provided new support to that theory. With enhanced resolution techniques it was later attempted to split the Compton peak into discrete spectral lines (e.g. Bearden 1930), analogous to a phenomenon which had by then been found in visible light (the Raman effect, section 39.7). Bearden used for this purpose "a large very perfect calcite (Iceland spar) crystal", but without success. It was also investigated whether the Compton effect was influenced by the electrons (which caused the X-ray scattering) being more or less free or bound to atoms, stationary or moving. Again, calcite was chosen for the task, for instance by DuMond (1933) who designed an instrument with 50 small crystals, and by Ross and Kirkpatrick (1934).

36.7 Light scattering, ozone and other topics

Lord Rayleigh had been of the opinion that the blue color of lakes and ocean water came from the sky, but not everyone agreed with him. Smoluchowski (1907) presented a hypothesis to the effect that the scattering of light in fluids and fluid mixtures might be caused by internal fluctuations in their density. This hypothesis was in agreement with the kinetic theory of thermodynamics. The fluctuations will become particularly large in the immediate vicinity of the critical temperature of a fluid, and it had in fact long been known that fluids take on an opalescing milky-white appearance when in that state. Smoluchowski's views were supported by the results of experiments by Onnes and Keesom (1908, Keesom 1911) on the absorption of light in ethylene around its critical point. Einstein (1910) improved Smoluchowski's work to the extent of predicting quantitatively the amount of scattered light, and connecting it with Rayleigh's original theory of scattering. Einstein's conclusions received additional confirmation in measurements on a water-phenol mixture by Fürth (1915) and on five esters by Andant (1922). In all these experimental studies, Nicol prisms were employed in photometric measurements (Fig. 36-4). Subsequent research on

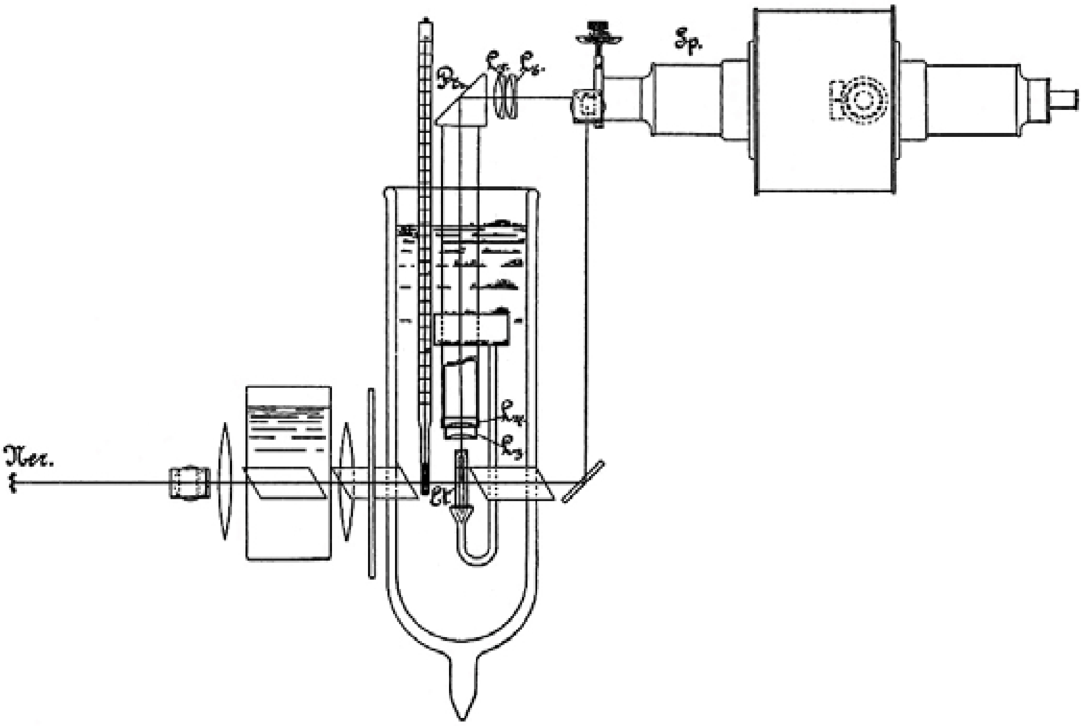

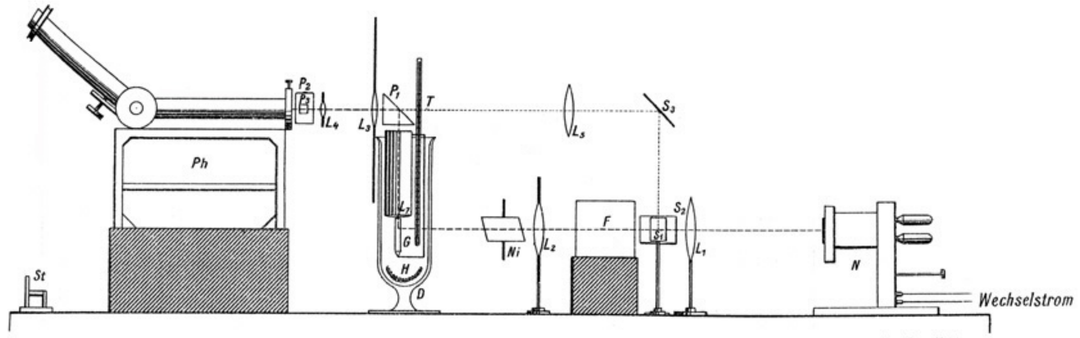

Fig. 3.

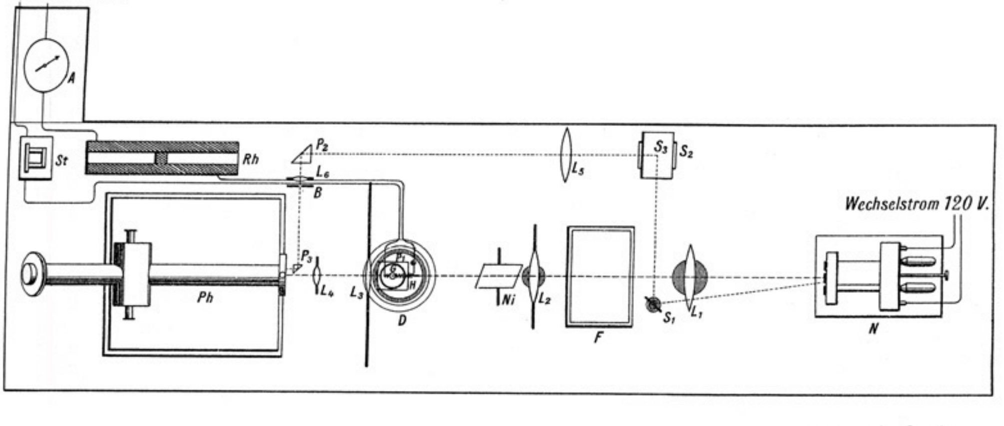

Fig. 2.

Figure 36-4. *Top:* The measurements of Onnes and Keesom (1908) on light scattered in a sample Et of ethylene (in a temperature-controlled bath) near its critical temperature. The light source is the lamp Ner on the left. Three Nicol prisms are used in this experiment, which is relevant to contemporary theoretical works by M. Smoluchowski and A. Einstein. *Bottom:* With this setup (seen here both from above and from the side), Fürth (1915) obtained results on light scattering in close agreement with Einstein's (1910) theory. Light from the lamp N is polarized by the Nicol prism Ni and passes through an enclosed sample of a water-phenol mixture, submerged in the glass vessel D. The intensity of the light is measured with the König-Martens photometer Ph (which contains Nicol and Wollaston prisms of Iceland spar) as the sample temperature is varied.

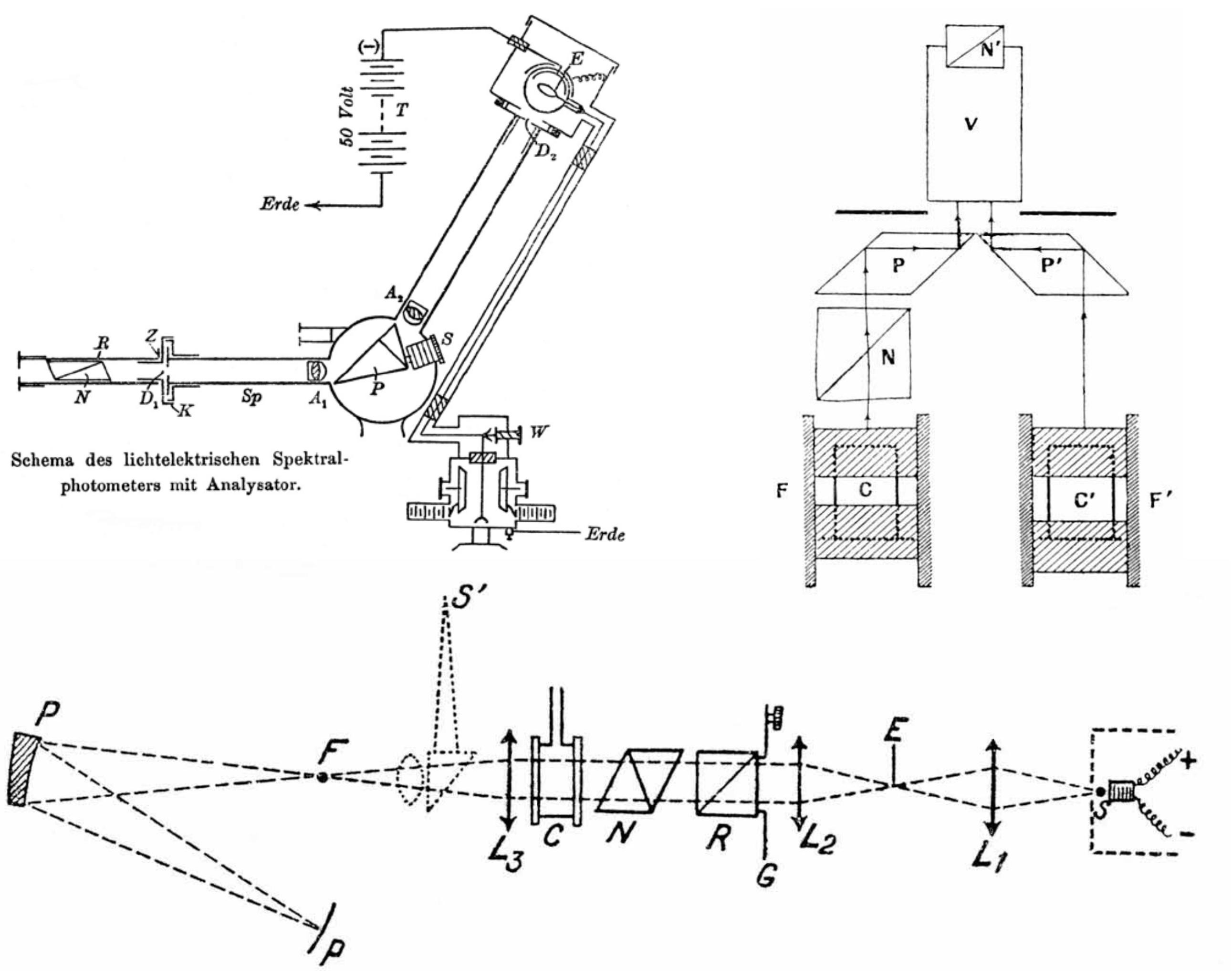

Figure 36-5. Optical instrumentation for research on gases and liquids. *Top left:* A photometer with electrical recording, used by Dember and Uibe (1918) for analysis of the spectrum of sky light as well as of its polarization. The light arrives from the left through the Nicol prism N. *Right:* A vertical section through the equipment designed by Lépine (1915), for comparison between the fluorescence properties of dyes in different concentrations and different solvents. The experimenter looks from above through the Nicol prism N' and the telescope V, and turns N until light from fluids in the containers C and C' appears to be of equal intensity. P and P' are glass prisms. *Bottom:* Ribaud's (1919) measurements of the absorption of visible and ultraviolet light by bromine vapor in the vessel C at various temperatures. A lamp is to the right and a spectroscope to the right. R is a Rochon prism, N is a Nicol prism and the L's are quartz lenses.

scattering has for instance contributed to improved understanding of stellar radiation and of the atmospheres of planets.

Zernike (1916), Schirmann (1919, 1926), Gans (1920 and later), Cabannes (1922) and Raman (1922) with his collaborators were among the many scientists involved in experimental and theoretical work on scattering and absorption of light in liquids around 1920. Shoulejkin (1923) presented a comprehensive explanation of the color of seawater, based partly on measurements with a König-Martens polarization spectrophotometer. Others investigating scattered light and its polarization in pure or colloidal liquids included King (1913), Smoluchowski (1916), Ribaud (1919, Fig. 36-5), Rayleigh jr. (1920 and earlier), Cabannes (1921), Gans (1921) and Lange (1928) using instruments like those shown in Fig. 36-6. Rayleigh jr. (1918), Raman and Rao (1923) and Cabannes and Granier (1923) studied similar phenomena in gases, and Rayleigh jr. (1919) in Iceland spar and other solids. Their measurements agreed fairly well with the Smoluchowski-Einstein theory mentioned above, but the light scattered at right angles to the incoming beam was not quite linearly polarized as Einstein had predicted (Martin and Lehrman 1922, Gans 1923, Krishnan 1935, Partington 1953, p. 246) except in the noble gases. Gans, Raman, Cabannes and others showed that this so-called depolarization furnished a means to estimate the size and shape of the molecules or other particles causing the scattering. The depolarization was greatest in those substances which exhibited a strong Kerr electro-optical effect (section 23; Martin 1924). See discussions in Partington (1953, p. 255-267) and in Stuart (1931) who states in an abstract that "Measurements of the depolarization of scattered light and investigations of the Kerr effect in molecules are important, because they permit conclusions to be drawn about their structure and mutual interactions of their constituents.". Depolarization of the 90°-scattered light was also in part caused by the fact that the "clumps" which especially form in liquids and gases near their critical temperature, are anisotropic to a variable degree as well as being of variable density. See Stuart (1936) for a review of this field. Around 1940, measurements of depolarization of light scattered from large molecules in solution were used to some extent to aid in estimating their size and shape (Lotmar 1938, Doty and Kaufman 1945).

Björnståhl (1918, Fig. 36-6) carried out a set of somewhat similar observations on the light absorption by liquid crystals. He demonstrated with the aid of a König-Martens spectrophotometer (Fig. 29-15) that the optical properties of this class of substances may be modified by the application of electric fields; the practical importance of this discovery has been mentioned in section 27.2 above.

If a compound of very large molecular size is dissolved in a liquid and its molecules do not aggregate, it may be deduced from the hypothesis of Einstein (1910) that the amount of light scattered by it is proportional to its molecular weight. This was first confirmed experimentally by Putzeys and Brosteaux (1935) on several proteins, and Debye (1944, 1947) pointed out that aspects like the shape of the molecules or the wavelength of the light did not have much influence on the result. This knowledge was then used to some extent around 1950 in research on the molecular weights (> 10,000 a.m.u.) of for instance albumins and globulins, polymers, antibodies, and viruses. Other methods of finding these weights were also available, such as ultracentrifuging and measurements of osmotic pressure. The books by Walsh (1958) and Tanford (1961, chapter 5) cover applications of light scattering in the 1950s, e.g. in research on macromolecules. This method is still used extensively in biology, chemistry, and biochemistry as well as in technology (brewing, purification of water, etc.)

Yet another application of scattered light in addition to those described above and in section 27.1, was in so-called ultramicroscopes (Fig. 36-6). In these instruments, particles in colloidal suspension in liquids or in glass (Siedentopf and Zsigmondy 1903, Cotton and Mouton 1903) could be made visible even if they were smaller than the wavelength of the light used. With illumination coming from the side, the particles (such as microorganisms) appeared as luminous specks on a darker background. Ultramicroscopes were marketed for decades by the Zeiss company and others. With an optional Nicol prism in the light path, some information could be obtained about the shape of the particles, and the presence of fluorescence could also be detected. See Appendix 5.

Measurements of the spectrum, intensity and polarization of light from the sky under varying conditions were continued, including studies on the correlation of these properties with the latitude and altitude of the observer, the seasons, meteorological factors, sun-spot activity, and major volcanic eruptions. Many of the original sources on these studies are in meteorological journals, doctoral theses and other publications which I have not consulted, but an extensive review was presented by Jensen (1928). As an example of this type of work one may mention the paper by Dember and Uibe (1918, Fig. 36-5) on the state of polarization of sky light depending on its color, using a new electrically recording instrument with a Nicol prism. A second example is represented by the long-standing detailed measurements by C. Dorno (e.g. 1919) on the visible part of the sky

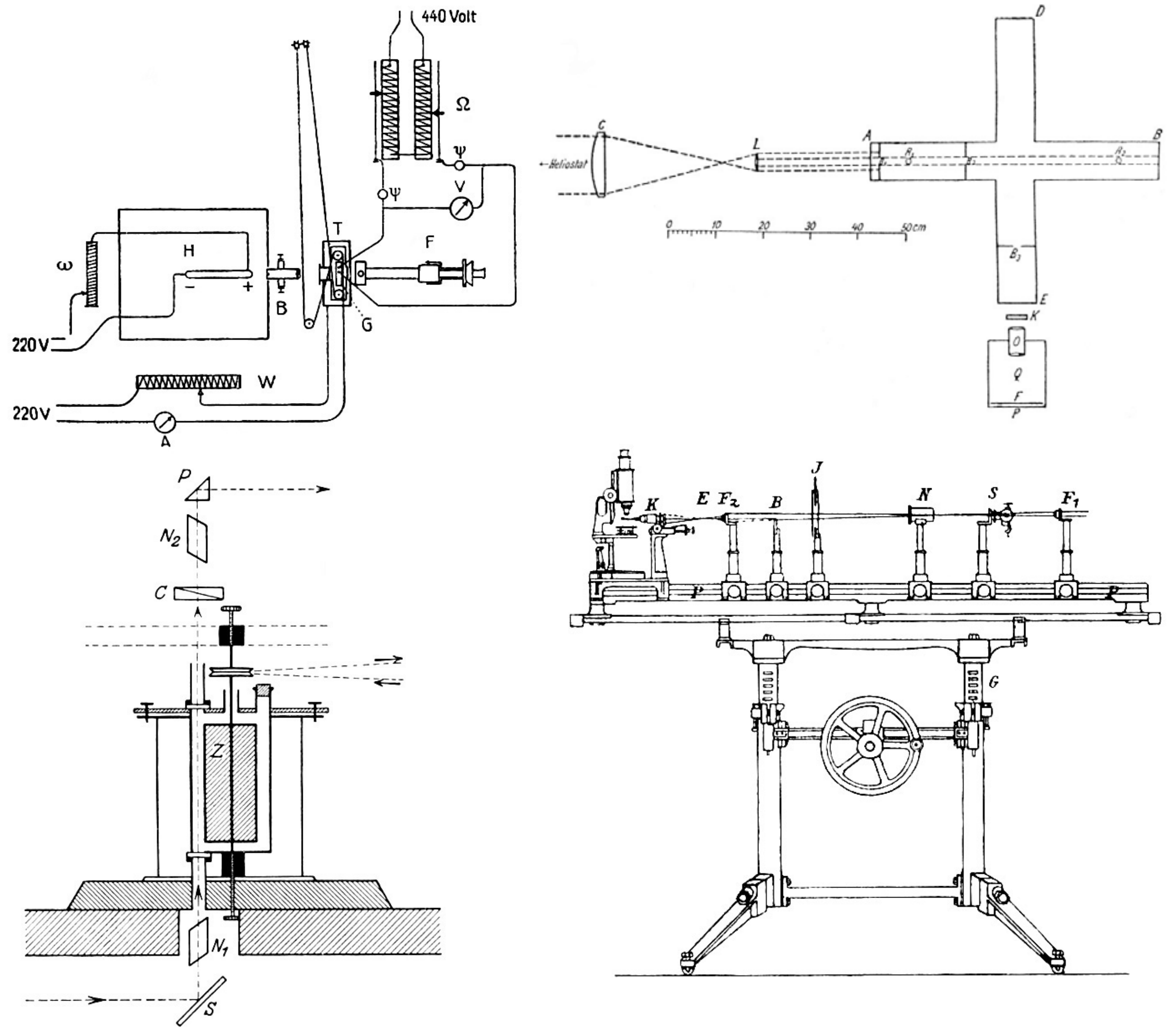

Figure 36-6. More research on gases and liquids. *Top left:* Björnståhl's (1918) work on the effect of electrical fields on refraction in liquid crystals. A sample in the container G is illuminated with the lamp B, and the light is then analyzed in the König-Martens spectrophotometer F. Four rheostats control the electrical field strength, the light intensity and the temperature. *Right:* The equipment of Gans (1921), here seen from above, contributed to improvements upon Einstein's (1910) theoretical work on light scattering. A light beam enters a cross-shaped vessel from the left, and an observer evaluates (through a window in one arm of the cross) the state of polarization of the light scattered from molecules of gas such as H_2 in the vessel. K is a calcite-glass beam-splitting prism. *Bottom left:* Equipment for studying the Maxwell effect (flow-induced double refraction) in fluids containing rod- or plate-shaped particles. The view is from the side, the cylinder Z is rotated at constant angular speed in the fluid container. Polarized light arriving from below is analyzed with the compensator C and the Nicol prism N_2. The illustration (Ambronn and Frey 1926) shows the setup of Umlauf (1892). *Right:* The ultramicroscope of H. Siedentopf and R. Zsigmondy. Light from the right illuminates a fluid sample in a vial underneath the microscope on the left, making particles visible as bright spots. The Nicol prism N was sometimes used, especially if information on the shape of the particles was desired. The illustration is from Zsigmondy (1925); it may have originally appeared in a C. Zeiss advertising leaflet around 1905.

light. He employed in part Weber's (1891) photometer from section 29.4 above, and probably also other equipment with Iceland spar prisms. Dorno later achieved fame for his research on ultraviolet radiation in the atmosphere.

A related topic which has been of much interest in recent decades, concerns the absorption of the solar ultraviolet radiation by ozone. As described in section 29.8, A. Cornu and others had found that this radiation had almost completely disappeared at wavelengths shorter than 290-300 nm, which agreed with the properties of ozone. Cornu also concluded from his measurements at mountain sites of up to 3.7 km altitude, that when the sun was near zenith slightly more of the shortest wavelengths passed through than at sea level. However, painstaking observations by for instance Wigand (1913) who took a calcite-prism spectroscope to 9 km height in a balloon, did not reveal any significant change in the short-wave limit of the solar radiation. Therefore, the ozone layer was bound to lie even higher, and altitudes of over 40 km were deduced from further research where Iceland spar prisms still had some role (Lambert et al. 1927). More recent work has however placed most of the ozone in the range of 20-40 km. Fabry and Buisson (1921) estimated the total amount of ozone in the atmosphere, using in their study Iceland spar prisms in the calibration of photographic plates. They found that if all the ozone was brought down to sea level under standard conditions, it would form a 3-mm thick layer. This conclusion is still valid.

G.M.B. Dobson and his associates who initiated comprehensive investigations of the ozone layer around 1923, appear to have mostly made use of photo-electric sensors. However, their techniques were to a large extent based on the fact that thin films of silver metal are fairly transparent in a narrow wavelength interval around 315 nm in the ultraviolet. This property which was discovered in 1883, had been studied for instance by Cornu (1889) and Minor (1903, Fig. 29-22) with the aid of Iceland spar prisms.

36.8 Luminescence; the Maxwell effect

Exposure to a brief flash of light raises the molecules of some compounds to an excited state, and for a short while thereafter they emit faint light, fluorescence. Many fluorescing substances were known by the mid-19th century, and others were discovered later. In the solid state, they have found applications e.g. in self-luminous watch dials, radar-, oscilloscope- and television screens. Substances of this kind, often dissolved in water or other liquids, include fluorescein, eosin, rhodamine and erythrosin. They may be encountered in photographic or printing materials, textiles, detergents, staining of histological specimens, and biochemical experiments. Photometers with Nicol prisms have been involved with various aspects of fluorescence, but only a few examples have been mentioned so far in this compilation (e.g. Becquerel 1861, Fig. 18-3, Lépine 1915, Fig. 36-5).

Fluorescence after illumination by strong polarized light is generally unpolarized, but some exceptions accumulated. The first one may have been noted by R.W. Wood in vapors of sodium, potassium and iodine in 1908. Franck and Hertz (1912) confirmed that this was the case at least to some extent, in iodine. A new phase in research on gas fluorescence began about a decade later, see section 39.3. Becquerel (1910) and Nichols and Howes (1916) investigated the polarization and other properties of fluorescence in ruby and crystals of uranium salts. Pochettino (1905, 1911) observed polarization phenomena in the luminescence produced in Iceland spar and other minerals by a current of cathode rays.

The polarization of fluorescence in liquids illuminated by polarized light was discovered by F. Weigert around 1920 (see Weigert and Käppler 1925). The phenomenon was studied in more detail e.g. by Wawilow (1925) and Hakenbeck (1929), both of whom used König-Martens spectrophotometers. The polarization decays rapidly because the molecules in the liquid are moving to and fro and colliding with each other. Such fluctuating movements of particles in a liquid were first described by the botanist R. Brown much earlier, and A. Einstein had investigated them theoretically in the case of spheres in 1905-06. Einstein however did not consider the much more complicated case when all the particles are either flattened or elongated in shape. Then their orientation will also fluctuate irregularly, but if the liquid is very viscous they have not rotated much before dropping to their normal energy level. Thus the emitted light can be polarized, for instance in the case of rhodamine B and erythrosin in glycerine. In the 1920s this motivated various studies (Fröhlich 1926), some including measurements of the decay times of the fluorescence polarization (with Kerr cells and other equipment) in liquids at different concentrations of the fluorescent substance, different temperatures and viscosities. Extensive theoretical analyses of the Brownian rotational motion also appeared (Perrin 1925, 1929 and later, Lewschin 1925, Hakenbeck 1929). For a while the measurements seemed to indicate that the fluorescence did not start immediately at the instant of the light flash; such a "dead time" would have posed an interesting problem to quantum theory, but Gaviola (1929) blamed that result on experimental errors.

In the early 1950s scientists began investigating the decay of polarization in the fluorescence of small molecules that had been attached to much larger ones like proteins. This was done in order to obtain information on the sizes and shapes of the latter (Weber 1952); a further development of the technique is mentioned early in section 39.2. In a recent book (Sun 2004) this fluorescence depolarization is said to be one of two classical methods of studying that aspect of diffusion in fluids which is related to molecular rotation. The other classical method according to Sun, is the Maxwell effect from section 27.3, see Fig. 36-6. This effect has provided much useful information on for instance the shape and refractive properties of particles in colloids (cf. Zocher 1925) and of large liquid molecules (Vorländer and Walter 1925). See also Sadron (1936), Robinson (1939), Piganiol (1947) and Partington (1953, p. 274-276). In this way Muralt and Edsall (1930), Boehm and Signer (1931) and Lawrence et al. (1944) studied large proteins such as myosin from muscles. Takahashi and Rawlins (1933) used the Maxwell effect to demonstrate that certain viruses infecting tobacco plants are rod-shaped, not spherical as had been generally assumed. Their methods were improved by W.M. Stanley‘s research group (e.g. Lauffer and Stanley 1938), see Stanley's lecture when he received the 1946 Nobel prize in chemistry. Around 1940 and later, important research was carried out on DNA (Signer et al. 1938), other organic macromolecules (see Tanford 1961, section 25c) and polymers with this technique.

36.9 Metal and semiconductor surfaces, and thin films

Of the various publications in the mid-19th century which dealt with the state of polarization and the relative intensity of light reflected from polished metal surfaces, those by Cauchy (1839b), Jamin (1845, 1847) and Quincke (1863) have been mentioned above. Around 1890 interest in the topic was revived, probably as a result of the confirmation of J.C. Maxwell's electromagnetic theory of light. According to the theory, the refractive index of conducting materials can be written as a complex number. Experiments involved not only metal surfaces, but also thin metallic films, semiconductor surfaces, and later thin insulating films. P. Drude (e.g. 1890, 1891, 1900a,b) is the best-known participant in this field. Contributions were also made by A. Cornu, A. Kundt, W. Wernicke (e.g., 1885), J. Conroy, G. Meslin, H. du Bois, O. Wiener, H. Rubens, W. Voigt, W. Betz (1905), H. v. Wartenberg (1910), H. Fritze (1915) and R.F. Miller (1925). Manufacturers like Duboscq (1885), Société Genevoise and A. Jobin offered instruments of the Jamin (1850a, Fig. 13-3) vertical-circle type for this field of research; horizontal Jamin circles or other spectrometers fitted with Nicol prisms and phase compensators were also available (e.g. Schmidt & Haensch 1896, Pellin 1899, Leiss 1905, Société Genevoise 1912).

These and further experiments employing polarized light no doubt played a role in the formulation of theoretical works on the causes of electrical conduction, by Drude (1904, chapter XXXVI of Winkelmann 1906) and subsequently by Lorentz (1915) and others such as Kent (1919, on metals). This research also may have accelerated development of the reflected-light microscopical techniques described in section 29.3, see for instance Müller (1903), Königsberger (1908) and Tyndall (1923).

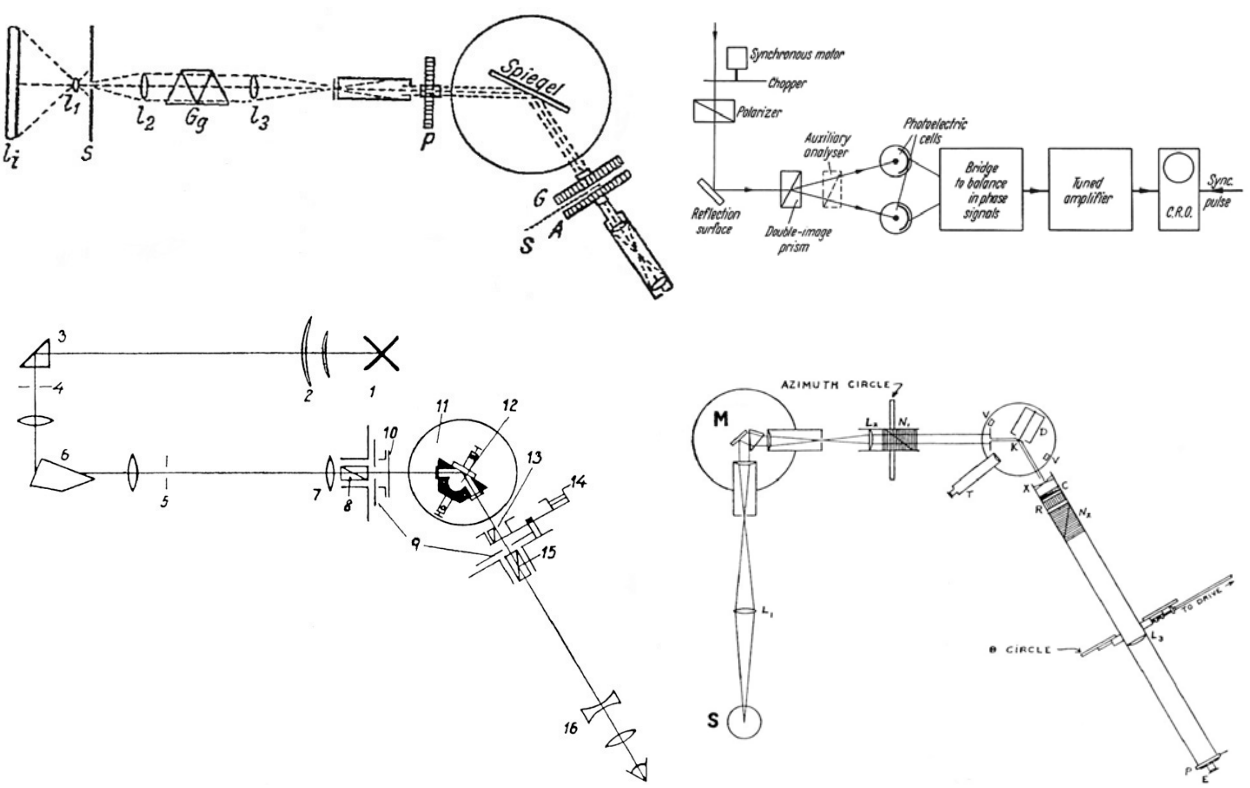

Figure 36-7. Reflection from metals. *Top left:* Lauch's (1924) measurements on thin vacuum-deposited layers of noble metals. Light from the lamp on the left is spectrally dispersed by the prism Gg and polarized by a Nicol prism P. After reflection from the metal, its state of polarization is analyzed with a sophisticated instrument (Leiss c. 1910) containing a Savart plate, a Senarmont compensator and a Nicol prism. *Right:* Equipment similar to that of Pfestorf (1926) in research on the optical properties of several metals. In this more recent setup (Handbuch der Physik vol. 25/I, 1961), his photographic recording has been replaced by photoelectric detectors. *Bottom left:* Measurements by Tronstad (1933) on the surface properties of e.g. mercury. The prisms on the left select light of a narrow wavelength interval from the lamp 1. It is then polarized by the Nicol prism 8 and is reflected from the metal at 12. Information of its state of polarization is obtained with the half-shadow prism 13 and the Nicol prism 15. *Right:* With Weld's (1922) "crystelliptometer" which among other things contains the lamp S and two Nicol prisms, the properties of light reflected from the semiconductor surface M may be determined.

New methods of producing thin films of metals were developed, including vacuum deposition on glass (e.g. Lauch 1924, Fig. 36-7). The analysis of polarization states in visible and ultraviolet light after reflection from metal surfaces and metallic films which was mentioned in section 29.8, was continued by Pogány (1916), Hauschild (1920), Weld (1922, Fig. 36-7) and Pfestorf (1926, Fig. 36-7), to name a few. It also laid the foundations for an important method (Tronstad 1933, and many others) which has been called "ellipsometry", Figs. 29-4 and 36-7. Since around 1960 it has been of extensive use in the non-destructive measurement of the thickness and physical properties of thin and very thin films used in optics and electronics. The method could be applied to films whose thickness was less than a tenth of that which other known methods were able to resolve. See for instance the compilation of reprinted classic papers edited by Azzam (1991). Such films are essential in the production of integrated circuits and microprocessors for computers, a multi-billion dollar industry. Collett (1993) claims that ellipsometry is "one of the most important applications of polarized light"; according to a paper in the Physics Today magazine of May 2009, it speeded up the appearance of modern computer technology by at least 15 years. Research on reflected elliptically polarized light also greatly improved understanding of the films forming on metal surfaces due to the action of electrolytes or of weathering (Tronstad 1929, 1932), and of adsorbed films of liquids on glass (Frazer 1929).

37 Iceland spar production, 1910-40

37.1 The Helgustadir quarry

Matters related to Iceland spar were somewhat prominent in Iceland politics in 1910-11, as may be seen from the Reykjavík newspapers, but these matters will not be covered in any detail here. A parliamentary committee of inquiry was set up in 1911 to scrutinize actions of past Minister Björn Jónsson, because of five points of alleged improprieties; one of these had to do with affairs of the Helgustadir quarry. There are references to the committee's findings in the records of Parliamentary debates for 1911, division A p. X, with supplementary documents nos. 195 to 239 which I have looked through briefly. The Iceland spar issue is also referred to in memoirs by Sveinn Björnsson (son of the above, and later president of the Republic of Iceland), published in 1957. What happened was that the Government had in 1910 put out a tender for the operation of the quarry, after the third 5-year term of the Tulinius companies ran out. Two bids were received, one from Thor E. Tulinius. The other one, which was higher, came from a Reykjavík businessman by the name of G. Jakobsson. The Government made a 10-year contract with Jakobsson, who was soon joined by another businessman, M.Th.S. Blöndal. According to memoirs of the civil servant J. Krabbe (published in 1959) and supplementary documents no. 218-219 of the above collection, the Zeiss Company sought unsuccessfully to lease the quarry from them. Instead, the authorities permitted Jakobsson and Blöndal to transfer the quarry contract to a French bank which in turn transferred it to a French limited-liability company named Société Française d'Entreprises en Islande. This outfit had been set up by J.P. Brillouin who was the French consul-general in Reykjavík to 1911.

According to a book by Thorarensen (1966), Thor E. Tulinius sold half of the stockpile remaining from the 1895-1910 mining operations for 75,000 kr., and turned the remaining half (stored at Eskifjördur and in Copenhagen) over to the authorities. However, the original agreement between the parties would have required Tulinius to first sell the whole stockpile and then keep half of the proceeds; hence the lawfulness of Tulinius' actions was debated, and some critics also voiced suspicions as to whether the half he sold had been of better quality than the one delivered to the state. The Government subsequently had to pay Jakobsson and Blöndal a considerable sum for selling (to Mr. Brillouin cf. Supplementary document 224) its half of the stockpile. This half amounted to about 7 tons according to the newspaper Lögrétta on 15 Nov. 1911. 4500 pounds (2250 kg) were also recovered by them from the quarry in 1910, apparently before the lease was transferred to the French company (Ísafold newspaper, 10 Dec. 1910). Brillouin´s scientific advisor was named in the Reykjavík press as being a Mr. Jobin, presumably from the optical-equipment workshop of that name in Paris.

In Supplementary documents 202-207 it is indicated that Thor E. Tulinius' sale of materials from his part of the Iceland spar stockpile reduced the demand for further supplies. This was a disappointment to Brillouin, but according to diaries of H.H. Eiríksson (located by the author in the National Archive in 2011) his company recovered 10000 kg at Helgustaðir in 1911, including about 1000 kg of good-quality material. A newspaper item (Suðurland, 23 Sept.) states that some workmen from a village in South Iceland had been employed at the Helgustadir quarry during that summer. The French did operate there in 1912 according to Eiríksson‘s diaries, recovering some 1600 kg. No quarrying took place in 1913, but operations were resumed for a part of the summer of 1914 yielding a gross quantity of 4300 kg. Eiríksson (1930) writes that the French recovered a total of two tons, which accordingly may refer to the amount of optical-quality spar. His diary entries regarding the fees paid by their company do not seem to agree with sums published in Parliamentary records (e.g., Division A for 1915), so these will not be discussed here.

S.H. Kvaran, a medical doctor and M.P. in the area, was in 1914 appointed as official inspector of the Helgustadir site instead of P. Torfason. The World War prevented further exploitation of the quarry for a while, and Brillouin's group never showed up again. Some documents relating to the quarry in the following years are stored at the National Archive but its staff inform me that these will be hard to find there. A private M.P.'s bill proposing in 1917 the sale of the Helgustadir farm (without the mining rights) to the sitting tenant was not ratified by Parliament.

With Parliament's consent, the government subsequently decided to operate the Helgustadir quarry on its own, and a recent mining engineering graduate, H.H. Eiríksson, was hired in 1920 to direct activities. See Eiríksson (1920, 1922). A report by him, referred to in series A2 of the Parliamentary records for 1921, p. 1686, seems to have been lost from the archive of the Parliament. Several relevant documents which I have not had the opportunity to inspect, were found by G. Jensson in the Reykjavik Trades College (where Eiríksson was headmaster until 1954) around 1997 and delivered to the National Archive. Some details of the site operations are published in Parliamentary debates, in Eiríksson's biography (Hagalín 1970) and in a paper by him (Eiríksson 1943). His workmen made a tunnel of about 70 m length into the hillside below the quarry (Fig. 37-1), recovering there some tons of good crystals (Hagalín 1970) which were exported. Curiously, another published source (Jónsson 1988) claims that no crystals were found in the tunnel and that all the recovered material came from the quarry itself. There certainly was some activity there, as one worker was killed by a rock-fall in late October of 1923; H. Hjelm (pers. comm. 2005) informed me that this happened during a flood in the Silfurlækur brook due to heavy rain. In the book by Kuhn and Prinz (2003) a photo dated in July 1924 shows six people at work in the quarry.

Parliament approved in 1921 that an Icelandic geologist named S. Emilsson be sent at its expense to the Zeiss works in Jena to learn techniques in cleaving and sorting Iceland spar crystals. See e.g. Emilsson's obituary, published in the journal Náttúrufrædingurinn in 1976. He did complete this training, but his skills do not seem to have been put to any use after he returned to Iceland. In 1922 Parliament passed an Act to the effect that the State had a monopoly on selling all Iceland spar recovered in the country; this legislation was annulled in 1933. In fiscal records, some income from sales of Iceland spar is listed on a few occasions, for instance 5300 kr. in 1929 which was of a similar order of magnitude as the annual wages of a civil engineer.

Hagalín (1970) quotes Eiríksson as having learned in 1924 that the major manufacturers of polarized-light equipment had found a less expensive and more practical material to replace Iceland spar. Furthermore, British Customs authorities were by then also supposed to have discontinued the use of Iceland spar in instruments for taxing sugar products. It now seems clear that these accounts by Hagalín are quite inaccurate. At least, no alternative to Iceland spar had been discovered, but better and/or cheaper supplies may have appeared on the market cf. the following sections. It is ironic, that while Eiríksson was closing down the Helgustadir quarry for these supposed reasons, Bouasse (1925a, p. 2) wrote that large Iceland spar crystals are worth their weight in gold!

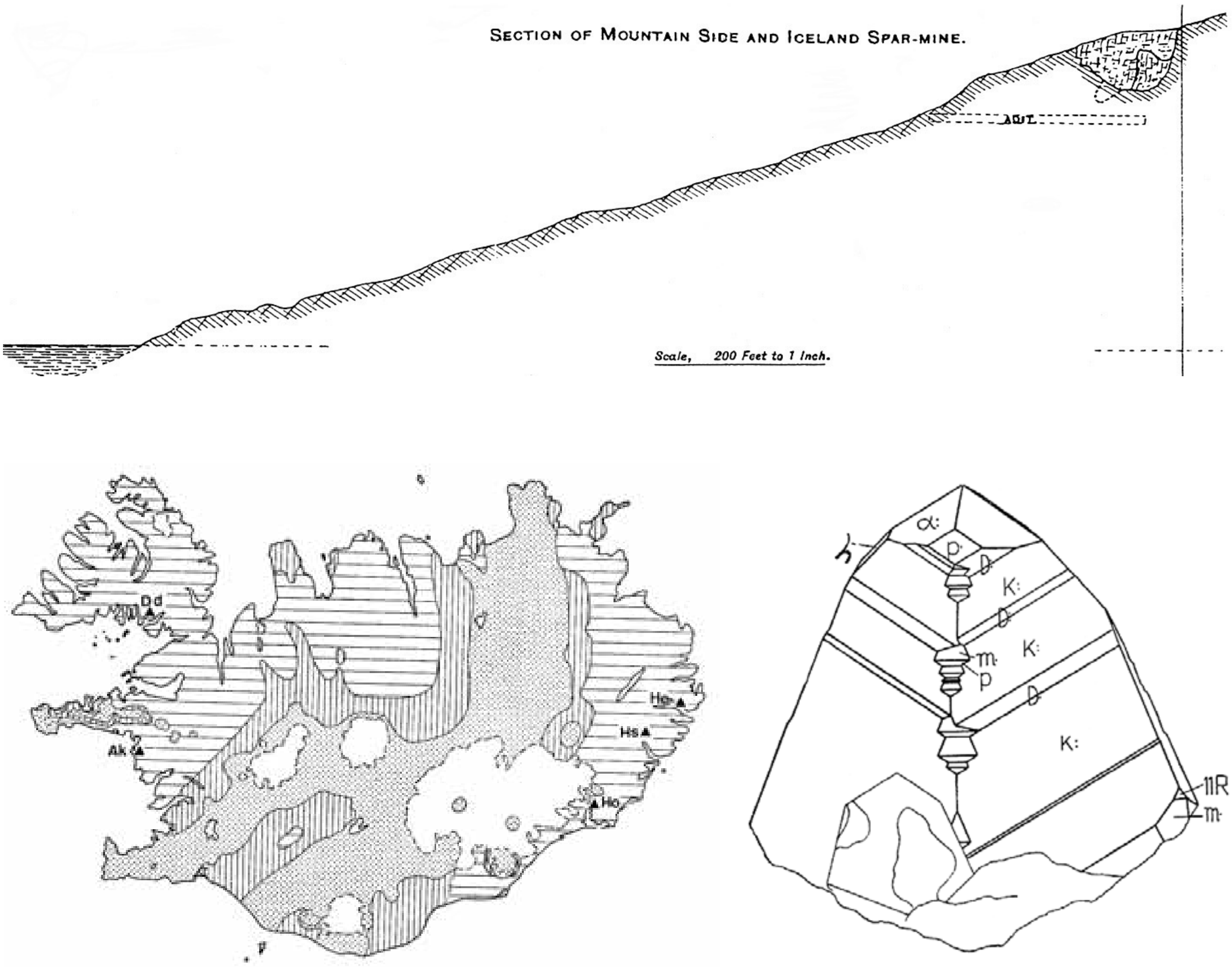

Figure 37-1. *Top:* Sketch by H.H. Eiriksson (1920) of the slope up to the Helgustadir quarry, including the tunnel to be dug underneath it. *Bottom left:* Iceland, with horizontal lines indicating basalt areas of Tertiary age. From Th. Einarsson's textbook of geology, 3rd ed., 1978. The quarries at Helgustadir (He) and Hoffell (Ho) are indicated, and also three other locations where some occurrences of impure calcite have been noted. These are Djúpidalur (Dd), Akrar (Ak) and most recently Höskuldsstadasel (Hs). *Right:* An Iceland spar crystal from Helgustadir, described by Kaspar (1940).

According to file indexes in the National Archive, documents from the local sheriff's office relating to affairs of the Helgustadir quarry in 1925-36 are somewhere in their vaults but archivists again have not had time to look for them. Eiríksson (1943) states that the quarry was leased to K. Magnússon from Reykjavík in 1935; a track for carts or lorries up to the site may have been constructed at that time. Another gentleman, E. Sigurbergsson, leased it for a period from 1939. Presumably they were mostly collecting waste spar from the tailings of the quarry, and crushing it for use in a surface finish on buildings (along with crushed obsidian, flint, jasper, marble and even seashells). This method of coating buildings was first used in 1933 on the National Theatre (Gudmundsson 2003). Numerous other official buildings, private houses, garden walls etc. were coated in this way at least into the late 1950s. Some experimentation in setting Iceland spar crystals into exterior or interior concrete surfaces also took place, the earliest example probably being the Catholic Church in Reykjavik around 1928. Curiously, Delbrueck (1907, 1912) indicates that crushed Kalkspat or even Doppelspat mixed with mortar and stucco is visible in places in two Roman temples from the 1st century B.C.

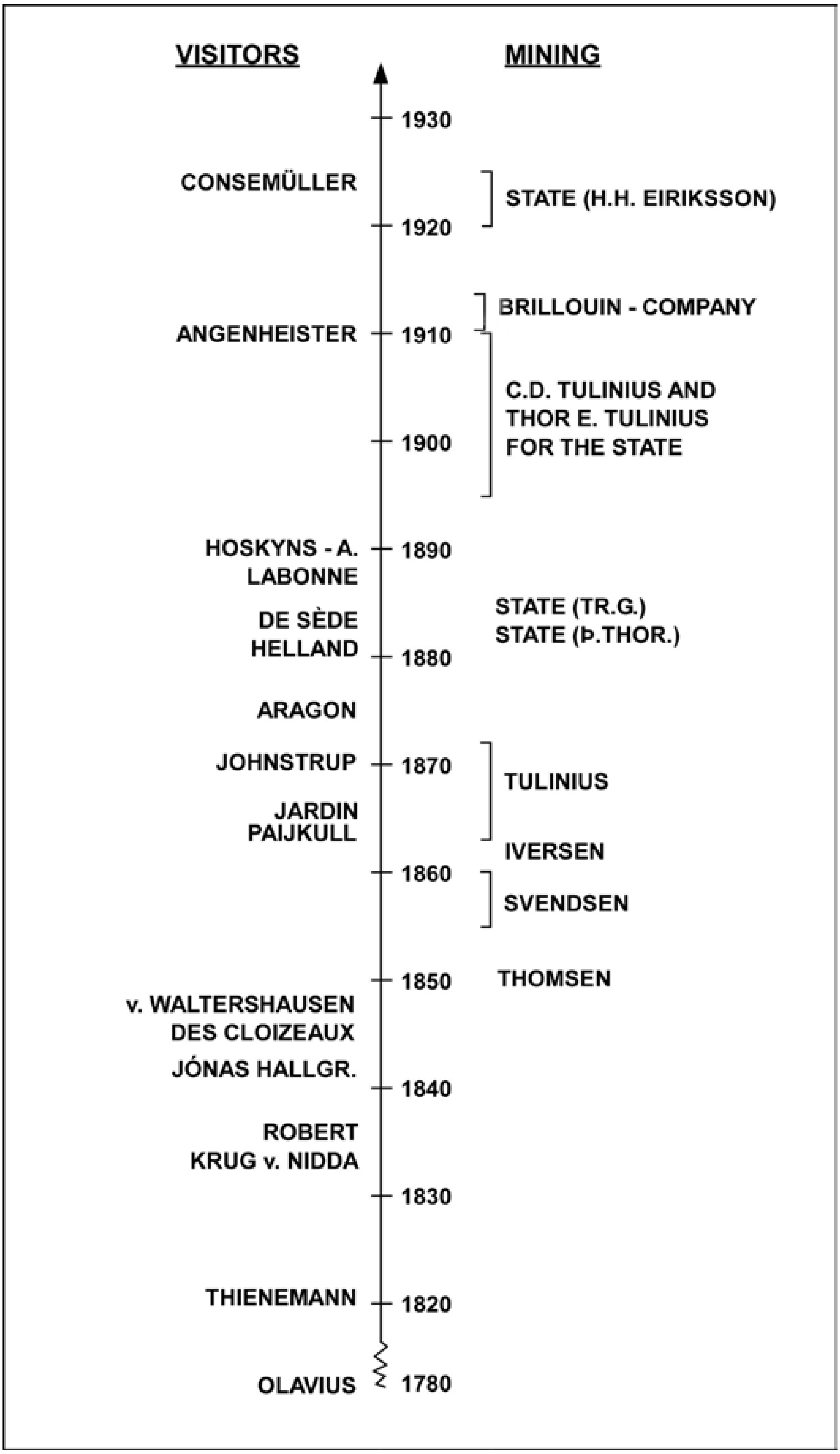

Figure 37-2. A timeline of mining activities at Helgustadir is on the *right*-hand side. The State owned ¼ of the farm and mining rights to 1879; since then, it has been the sole owner. The *left*-hand side gives the names of some travellers who visited the site in the period 1780-1930, or were otherwise interested in it.

Fig. 37-2 shows a timeline for events at the Helgustadir quarry in 1780-1930, with geologists and other occasional visitors on the left and operators on the right. It may be added here that a Czechoslovakian expedition in the late 1930s published a report on the quarry, also describing some crystallographic properties of samples from there (Kaspar 1940, see Fig. 37-1).

37.2 Hoffell and other potential spar localities

G. J. Hoffell (1946, p. 39-44) has written an account of the discovery of a site yielding good Iceland spar crystals, in late 1910. The site was at 500 m altitude on a mountainside not far from his farm Hoffell in Hornafjördur fjord, Southeast Iceland. See a map of the locality and some others in Fig. 37-1. A quantity of spar was recovered there in the following years and exported through the initiative of B. Kristjansson, a merchant and M.P. in Reykjavik. See also Arason (2004). In a Parliamentary debate of 1922, Kristjansson however does not speak very highly of the site, and neither does H.H. Eiriksson who inspected it in 1923 (Hagalín 1970, p. 172). Access to both the site itself and transportation facilities was much more difficult than at Helgustadir. The exporting of spar from Hoffell was discontinued during WW I but then resumed (from 1921 according to Eiríksson 1943), when T.E. Tulinius leased the mining rights and worked the site for three seasons. Eiríksson (1930) states that there has been no mining activity at Hoffell since 1925. According to Gudmundsson (2003) the calcite for the National Theatre exterior coating came from Hoffell around 1933, and Arason (2004) says that it is also a part of decorations inside the theatre foyer. Hoffell (1946) and other sources state that Iceland spar and aragonite were last mined at the Hoffell site in 1938-39, in order to provide materials for the main building of the University of Iceland. On the exterior of this building, spar crystals are enclosed in large whitish tiles around some windows and above the main entrance. Inside, there is a large number of Iceland spar rhombs in a small cupola above the entrance, and on the altar of a chapel used by the Faculty of Divinity.

As mentioned in chapter 24, T. Thoroddsen (1889, 1890, and other publications) considered Djúpidalur on the south coast of the northwestern peninsula to be a potential spar-mining site. Occasional attempts at prospecting for optical-quality calcite were carried out here in the early 20th century (see e.g. Hagalín 1970, p. 233). According to a newspaper account in 1951 the material was too yellowish for that purpose, but some calcite was collected there in the 1940s for use in masonry. In his writings, T. Thoroddsen suggests that the Gvendarnes promontory in Fáskrúdsfjördur (south of Reydarfjördur) may contain some calcite, and also the farm Akrar in central western Iceland (Fig. 37-1) already referred to in chapter 32. However, neither seems to have ever produced any optically useful crystals.

37.3 Iceland spar mining abroad, 1910-40

Tschirwinsky (1910) mentions a new spar locality in the Crimean peninsula, but the only other reference to it in the following decades that I am aware of is in Dammer and Tietze (1913, p. 387), who say that “the Crimea has occasionally provided some quantities of clear calcite useful for technical purposes”. At Greycliff in the U.S. state of Montana, a minor quantity of Iceland spar was recovered before 1918, and some 600 lbs. were exported around 1908 (Parsons 1918, Bowles 1920, Hughes 1941). Parsons considers the Montana material to have been “the nearest approach to Iceland spar yet uncovered anywhere in any part of the world”. In a report of the U.S. Geological Survey, Mineral Resources of the United States 1918, this locality is said to be the only place outside Iceland where Iceland spar is being mined. However, only very minor quantities seem to have been recovered there in 1919-21 (Bowles 1922). Hughes (1937) indicates that small amounts of Iceland spar from Montana and California were used in U.S.-made optical instruments in WW I. I have also seen crystals from these places mentioned in the context of X-ray spectroscopy. An occurrence of calcite in basalt containing a small proportion of optical-grade crystals was discovered at Cedarville, California in 1920. This deposit was worked from 1921 and depleted in 1924 (Lowry 1943, Wright 1950). The State Mineralogist (Hamilton 1922, p. 52) asserts that it marked the first production of optical spar in the United States, which is not consistent with some statements above. Wright estimates that the annual world consumption of Iceland spar before WW II was always less than 500 lbs. H. Schulz (in Wien-Harms 1928 p. 385, see Appendix 1A) claims that most of the U.S. production was of poor quality.

In a jubilee volume of the optical supply firm of B. Halle Nachfl. (1963) it is stated that "Iceland was since the time of Bartholin the source of optical-quality spar. The output of the Helgustaðir quarry however kept diminishing, and in 1907 no more material was shipped to Copenhagen by its operator T.E. Tulinius. The stocks of his company lasted for considerable time, and then Iceland spar unexpectedly began arriving from South Africa. However, only 40-50% of this was suitable for optical purposes. Some Siberian calcite also appeared, mostly having a brownish tint". In a publication of the South African Geological Survey (1936) the following appears:

"In the Union of South Africa, Iceland spar has been found in deposits sporadically distributed over a large area in the north-western Cape Province including portions of the divisions of Kenhardt, Calvinia, and Namaqualand…nearly all the Iceland spar produced has come from scattered deposits on the farms…situated some 50 to 70 miles southwest of Kenhardt.

No accurate statistics of the Iceland spar recovered from this area are available as the output from the various deposits has been small and the production intermittent; moreover most of it has been exported in small quantities by post and and no official control on the output has been exercised. It has been estimated, however, that since exploitation first began possibly 20 years ago, between 1,500 and 2,000 lbs. of Iceland spar have been exported from the Union.

…the Iceland spar is found in association with a good deal of worthless calcite. It occurs in the form of veins, lenses and isolated crystal aggregates of irregular shapes and sizes embedded in soft decomposed doleritic rocks, which occur abundantly in that area as dykes and sills…The Iceland spar in the Kenhardt area is recovered from shallow open workings none of which are deeper than 70 feet in the decomposed doleritic rocks.".

According to H.H. Hughes (1931, 1937; see also Kelley 1940) the Kenhardt area replaced Iceland as the main source of Iceland spar for optical instruments soon after 1920. On p. 497 of the 4th edition of the above-mentioned South African handbook (published in 1959; L. Hughes, pers. comm. 2000) as well as in its 5th edition (Coetzee 1976) it is confirmed that this was the case up to WW II. A very fine deposit at Clanwilliam in the Cape Province is mentioned by some sources of uncertain date on the Google Books website. After 1944 Polaroid sheets "virtually eliminated commercial interest in Iceland spar" (an exaggeration?) so that no further production took place from the South African sites before the late 1960s. In some U.S. newspapers in 1939 there appeared a news item from Windhoek in Southwest Africa (at that time administered by South Africa, but now called Namibia). It stated that Iceland spar was found in the region in 1926 and that organized mining for export was being established; the recovery methods up to then appear to have been rather crude (cf. Appendix on SW-Africa in South African Geological Survey 1936).

I have received information on a site discovered around 1912 in a gold mine near the town of Tabulam in New South Wales, Australia (G. Smith 1926, referred to in a personal communication from T. Krassmann 2005). At this site large calcite crystals, partly transparent Iceland spar, occupied a cave of 70 x 16 x 9 feet in size. In about 1924 an employee of the Zeiss company (probably

R. Straubel) arrived and hired local people to break the crystals apart and pack them in crates for shipment to Germany.

Good-quality spar arrived on the market from Spain “within the past few years” (Hughes 1937), but the quantity was small according to Lowry (1943). Later, supplies may have come from Siberia and/or Japan (cf. Eiríksson 1943, and a chapter by T. Tryggvason in a book on the natural history of Iceland published in 1961), although Hughes‘ (1941) compilation does not mention any sources in the Soviet Union. Coetzee (1976) also refers to spar sites in e.g. Cornwall, the Harz mountains in Germany, Mexico, and Canada.

38 The Faraday effect and Kerr cells, mostly in 1920-40

38.1 Research on very rapid processes

Let a beam of ordinary light pass through a polarizing Nicol prism and a glass vessel of several cm length containing nitrobenzene or CS_2 between capacitor plates (a Kerr cell, see chapter 23) tilted at 45° angle to the plane of polarization. If the beam then encounters a second Nicol prism set at right angles to the first one, no light is transmitted by this arrangement. When however a high voltage is applied to the plates, so that the fluid becomes doubly refracting to a significant extent, the Kerr cell acts like a phase compensator (section 13.5) and a part of the light can pass through the second Nicol prism. The apparatus therefore constitutes a voltage-controlled light switch. Pauthenier (1920) and others showed that it could modulate light at frequencies up to at least a thousand times higher than mechanical devices (such as slotted metal plates or polygonal mirrors, rotated by electrical motors). According to Bennett and Bennett (1978) these frequencies can even be increased to more than 1 GHz with suitable electronic circuitry.

Kerr cells were used up to 1940 or so in early research on very rapid processes and short-lived phenomena, including the duration of fluorescence in dissolved dyes (1-10 ns; Gottling 1923, Gaviola 1926, 1927, Fig. 38-3, 1929, cf. Bruhat 1942, p. 738) and lifetimes of excited states in gas molecules (Hupfeld 1929, Griffiths 1934). Brown and Beams (1925, Fig. 38-1), Lawrence and Dunnington (1930), Hámos (1930) and others employed Kerr cells in studies on the formation of electrical sparks.

Research on the duration of continuous light pulses (i.e. without phase jumps) was mentioned in section 13.1 above. This question of the “length” of a photon became still more interesting after the advent of quantum theory. Thus, it was attempted to measure the time it took light to eject electrons from a metal surface (Lawrence and Beams 1927) but the results were probably not significant. E. Rupp (1928) investigated whether the spectrum of a monochromatic light beam which was chopped into short segments by a Kerr cell was altered in a particular way. This was in continuation of experiments that he had done in collaboration with A. Einstein to test certain aspects of quantum theory. Later however, it has become evident that an account by Rupp in 1926 on the former experiments was mostly fictive (see the compilation by A.P. French in the journal Physics in Perspective 1, 3-21, 1999), and so were papers published by him after 1930. Stauffer (1930) in fact pointed out deficiencies in Rupp’s (1928) procedures and improved on his experiments (Fig. 38-2, top) but did not obtain any unexpected results regarding the spectrum of the chopped beam. Righi (1883) had much earlier made spectral analyses of light transmitted through rotating Nicol prisms, and such frequency modulation of light and other electromagnetic radiation became technically important in the late 20th century.

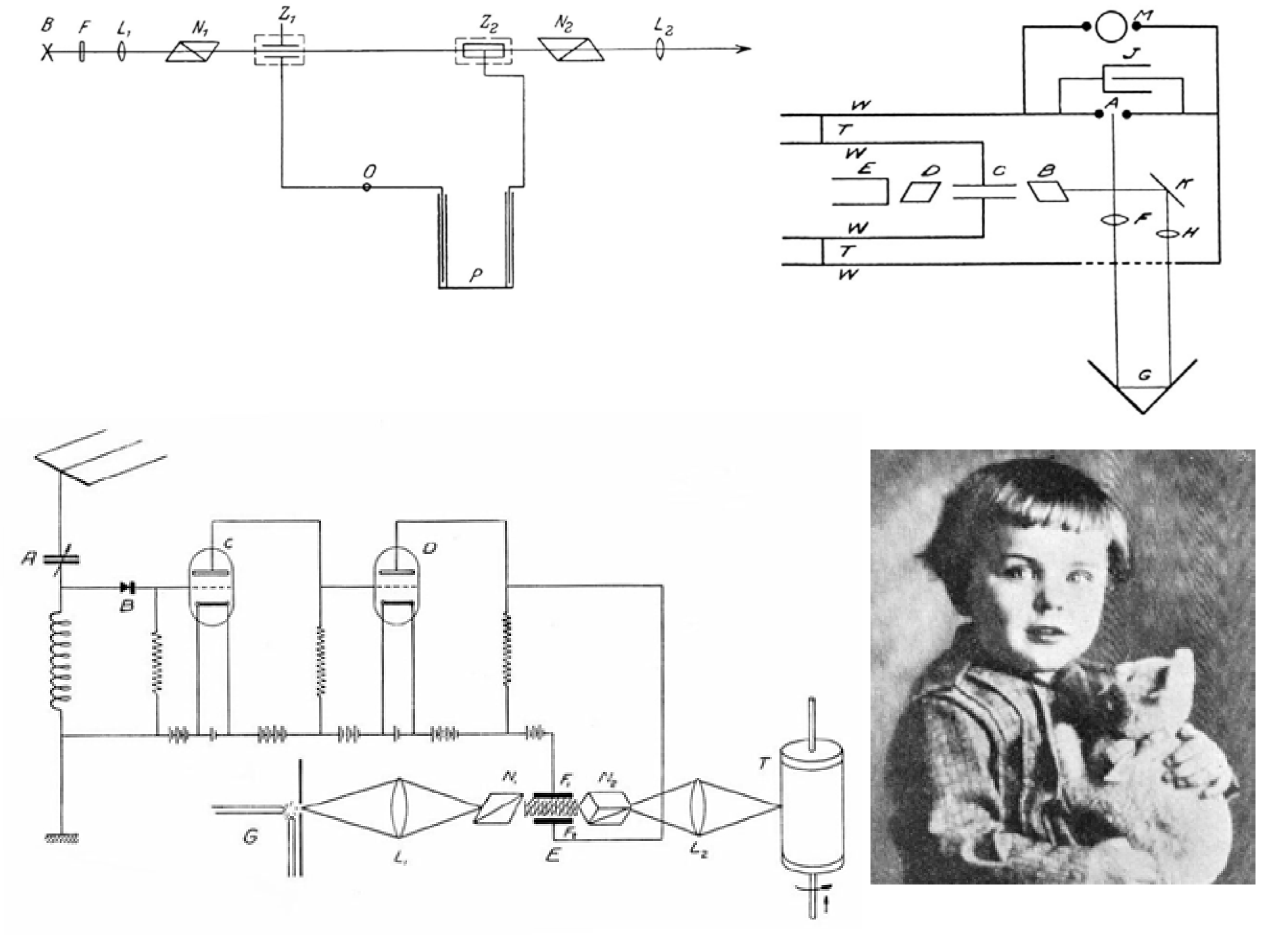

Figure 38-1. Applications of the Kerr electro-optical effect. *Top left:* Gutton's (1911a) comparison of the speed of light in air (horizontally at the top) and as an electromagnetic wave along wires. O is an oscillator, P is a slider for changing the length of the wires. Z_1, Z_2 are Kerr cells and N_1, N_2 are Nicol prisms (Wien-Harms 1928). *Right:* The setup by Brown and Beams (1925) to study the development of an electrical spark across the gap A. G is a mirror which can be moved farther away to delay the light that is analyzed by the spectrometer E. B and D are Nicol prisms, C is a Kerr cell. *Bottom left:* A Telefunken AG receiver circuit for the wireless transmission of pictures. A signal from the aerial on the left controls the voltage applied to the Kerr cell at E, varying the intensity of a very small spot of light from the arc G which reaches the photographic paper on the slowly rotating drum T. *Right:* A photograph sent in one minute using this technique. The illustrations are taken from a Danish book containing popular accounts of various inventions and discoveries: Teknikens Vidunderland, ed. V. Marstrand, 1928. A similar circuit drawing may be found in U.S. patent no. 1,730,772 granted to A. Karolus in 1929.

I. W. Beams and F. Allison (e.g., 1927) measured the time that it took the Faraday effect to become established in fluids upon the sudden application of a magnetic field. With his collaborators, Allison later developed from this a method of chemical analysis, which was also supposed to indicate what isotopes of each element were present in a fluid. One result announced by him around 1931 was that a heavy isotope of hydrogen existed. This prompted H.C. Urey to initiate an extensive research project to isolate this isotope and study its properties, see e.g. Urey (1934). The project yielded important results, for which Urey was awarded the Nobel prize in 1934. In that year it was also demonstrated (Phys. Rev. 47, 310-315 and 546-548, cf. a lecture by I. Langmuir reproduced in Physics Today, Oct. issue 1989, p. 36-48) that all the magneto-optical work of the Beams and Allison group was based on instrumental artifacts and its results were therefore totally meaningless!

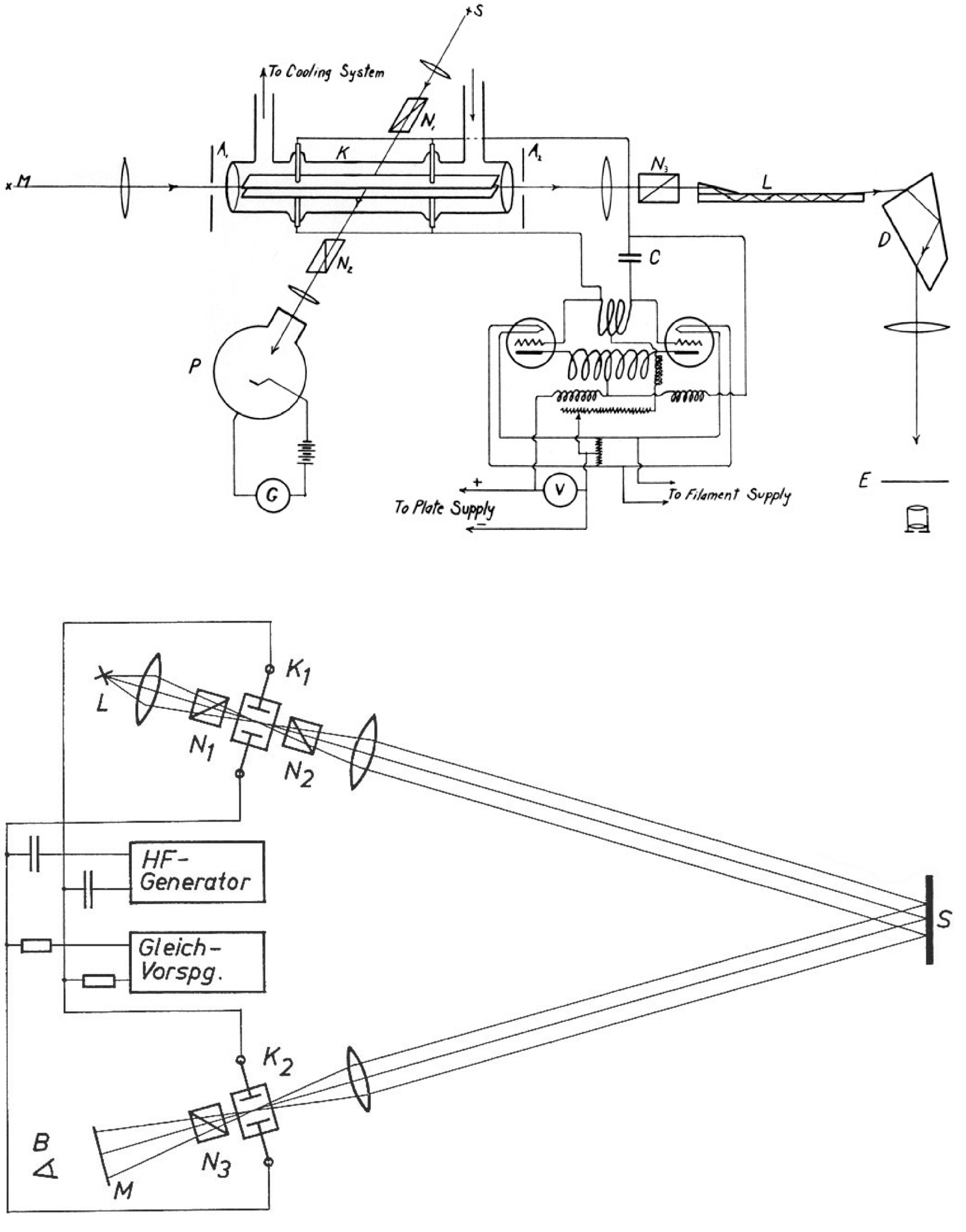

Figure 38-2. More applications of the Kerr effect. *Top:* Stauffer (1930) investigated how the shape of the 546.1 nm green spectral line in a light beam from the mercury lamp on the left-hand side is changed when chopped into segments by the Kerr cell K. The spectrum is dispersed by the Lummer-Gehrcke plate L whose resolving power is increased by the Nicol prism N_3. *Bottom:* Measurement of the speed of light, made by Karolus and Mittelstaedt (1928). They employed the Kerr cells K_1 and K_2 whose voltages are governed by a stable MHz oscillator circuit, to measure the travel time to and from the mirror S (about 41 m each way). This replaces the toothed wheel in the 1849 measurement by H. Fizeau. Anderson (1937) and Hüttel (1940) used a similar technique, with improvements such as a photocell detector and better frequency control.

38.2 The Faraday effect and Kerr cells in communications technology

A short paper by W. Lucas (1882) was among the first appearances in print where the possibility of transmitting pictures by wire was discussed. Like many later suggestions, Lucas' idea was based on the fact that the electrical conductivity of selenium metal depends on its illumination. He envisaged varying the light intensity with a pair of Nicol prisms, one rotating relative to the other as in the sections 18.4 and 29.4 above.

Two years later a young man, P. Nipkow, was granted German patent no. 30105 on an "electrical telescope" to send a pattern of light dots in sequence between distant locations. A key element of his invention was a pair of rotating discs with a number of small perforations arranged in a spiral. The total transmission time had to be so short (0.1 second) that the dots appeared as a picture. The receiving apparatus contained Nicol prisms, and the light intensity passing through them was to be controlled by means of the Faraday effect in heavy glass or CS_2. Sutton (1890) proposed a similar system as that of Nipkow, however employing the Kerr effect instead of the Faraday effect in his receiver.

These devices probably were not actually constructed at that time. Crehore and Squier (1897) tested a Faraday-effect telegraphic receiver, but their system was probably considered too complex to be practical. The first one acknowledged to have been demonstrated with success was introduced by G. Rignoux (1914) in 1909. He transmitted pictures of four capital letters. At the receiving end the illumination was controlled in the same way as in Nipkow's patent, i.e. through the use of the Faraday effect in CS_2. L.J. Leishman is also said (Isakson 1922) to have employed this effect in receivers for his commercial telegraphic and wireless transmission of photographs around 1920.

Nipkow put his Faraday-effect invention away until he retired in 1919. After he had improved his synchronized spiral-hole discs, his new patent on these (issued in 1924) was purchased by the firm Siemens & Halske in 1930. The German Biographic Encyclopedia states that A. Karolus had constructed a television receiver based on a modified Kerr cell in 1924, which indicates that it was superior to the Faraday-effect arrangement. F. Schröter asserts in Physikalische Blätter v. 24, p. 13-17, 1968 that this convinced the technical community of the practicality of television. In the years to follow, Karolus patented several pieces of equipment containing Kerr cells, for use in communications and other fields.

In some of the first attempts at sending television pictures to be projected on large screens (by J. L. Baird in 1931-32 and by Fernseh AG in 1933 or 1934), Kerr cells were also employed. See Wright (1932), news items in The Times 6 Jan. 1931, and an account by R. Barthélemy in Revue Scientifique, 9 Dec. 1933. Scheduled transmissions began in Berlin in the Spring of 1935 and 15 screens were installed for public viewing, but the transmitting station was destroyed in a fire in the late summer. Baird seems to have made use of Kerr cells for television displays until 1937, cf. a news item in The Times 7 Jan. However, cathode-ray tubes which were being developed rapidly in the 1930s, soon replaced both the Nipkow discs and the Kerr cells in television technology.

Around 1926, the above-mentioned A. Karolus and associates at the Siemens and the Telefunken companies had begun using his improved type of Kerr cell to make copies of documents that had been scanned with photocells in distant locations and transmitted by telephone or wireless. This was quite analogous to the more modern fax technology; however, it was not at all a new concept as other methods had been in use for that purpose since 1907 (cf. a paper by A. Korn in Die Naturwissenschaften in 1925). Following extensive tests, a commercial service was inaugurated at the end of 1927 (according to The Times) to transmit photographs, bank documents, fingerprints of criminals, engineering drawings and the like between Vienna and Berlin. See the lower part of Fig. 38-1, published in 1928. A news item on similar picture transmissions between Britain and the U.S. appeared in The Times 4 Feb. 1929, and E.V. Appleton (1929) described technical improvements in this service later that year. Incidentally, Appleton was at that time investigating how radio waves were propagated through the earth's ionosphere or were reflected from it. He discovered among other things that the ionosphere acts on these waves as a doubly refracting substance, due to effects of the geomagnetic field. For his researches, Appleton was awarded the Nobel prize in physics in 1947. Kerr cells continued to be used in receivers for transmitted pictures at least until the mid-1930s (Küpfmüller 1936).

With the aid of Kerr cells, it is also a simple matter to use amplified sound oscillations to modulate a light wave. Tests of the application of this method to telephone communications were made around 1930 (e.g. West and Jones 1951) but it proved impractical as lasers and fiber optics had not yet arrived on that scene. The same technique was also tested in recording a sound track onto movie films (Zworykin et al. 1928, Gallahan 1931, Fig. 38-3). Gibson (1929) considers U.S. talkie production still to be in its early stages, while according to him a company in Germany is already producing good-quality movies where a Kerr cell controls the sound. The method was in use into the 1930s according to Pauthenier (1932), Waetzmann (1932, Ch. 12) and Bruhat (1942, p. 518), and major firms (such as Westinghouse) on both sides of the Atlantic were taking out many related patents. However, the fluid most advantageous for Kerr cells is nitro-benzene which is both quite poisonous and sensitive to impurities which accumulate in it during use. Around 1950, attempts were initiated to employ the Pockels effect (see section 39.6) in ammonium phosphate crystals, to make movie sound tracks (Carpenter 1953) and to replace Kerr cells in various other applications.

38.3 Kerr cells and the speed of light

The first suggestions to use the Kerr effect in light-speed measurements appeared in 1899, and Brunhes (1900) showed with the aid of a CS_2 Kerr cell that the speed of X-rays was of similar order of magnitude as that of light. Brace (1905a) proposed an experiment involving Kerr cells, to estimate the earth's speed relative to the aether. Gutton (1911a, Fig. 38-1) compared the speed of light in air with that of electromagnetic waves propagating along wires, and found a difference of less than 1%. Gutton (1911b) also used Kerr cells to confirm certain theories regarding the so-called group velocity of light waves in dispersive media. Around 1925, A. Karolus of the last section, Gaviola (1926) and others discussed the possibility of measuring the speed of light directly with this technique. Results of such determinations (made indoors, for the first time) were published by Karolus and Mittelstaedt (1928) and by Mittelstaedt (1929). Here, a Kerr cell activated by high-frequency high-voltage oscillations (3-7 MHz, 6000 V) was in the role of a light gate, and a calibrated vacuum-tube oscillator served as a clock to measure the time it took a light beam to travel a known distance of some 330 m (i.e. four times back and forth between mirrors in the lower part of Fig. 38-2). Later, speed-of-light measurements were made with Kerr cells by Anderson (1937) and Hüttel (1940). In their work, Nicol prisms were employed, but in determinations published by Anderson in 1941 and by E. Bergstrand in 1950 (see West and Jones 1951, Jenkins and White 1957) the prisms were replaced by Polaroid polarizing sheets.

Due to certain problems with the Kerr cells which were not discovered until later, the light-speed determinations made with them in 1928-41 yielded values that were too high by 15 km/s or more. Measurements by A.A. Michelson in 1924-27 on a 35-km path in air with a rotating-mirror octagon turned out to give better results, although this may have been due to chance (cf. Birge 1941). By 1948 the light speed in air was known so accurately that it was possible to measure distances in geodetic surveys by means of very stable high-frequency oscillators and Kerr cells.

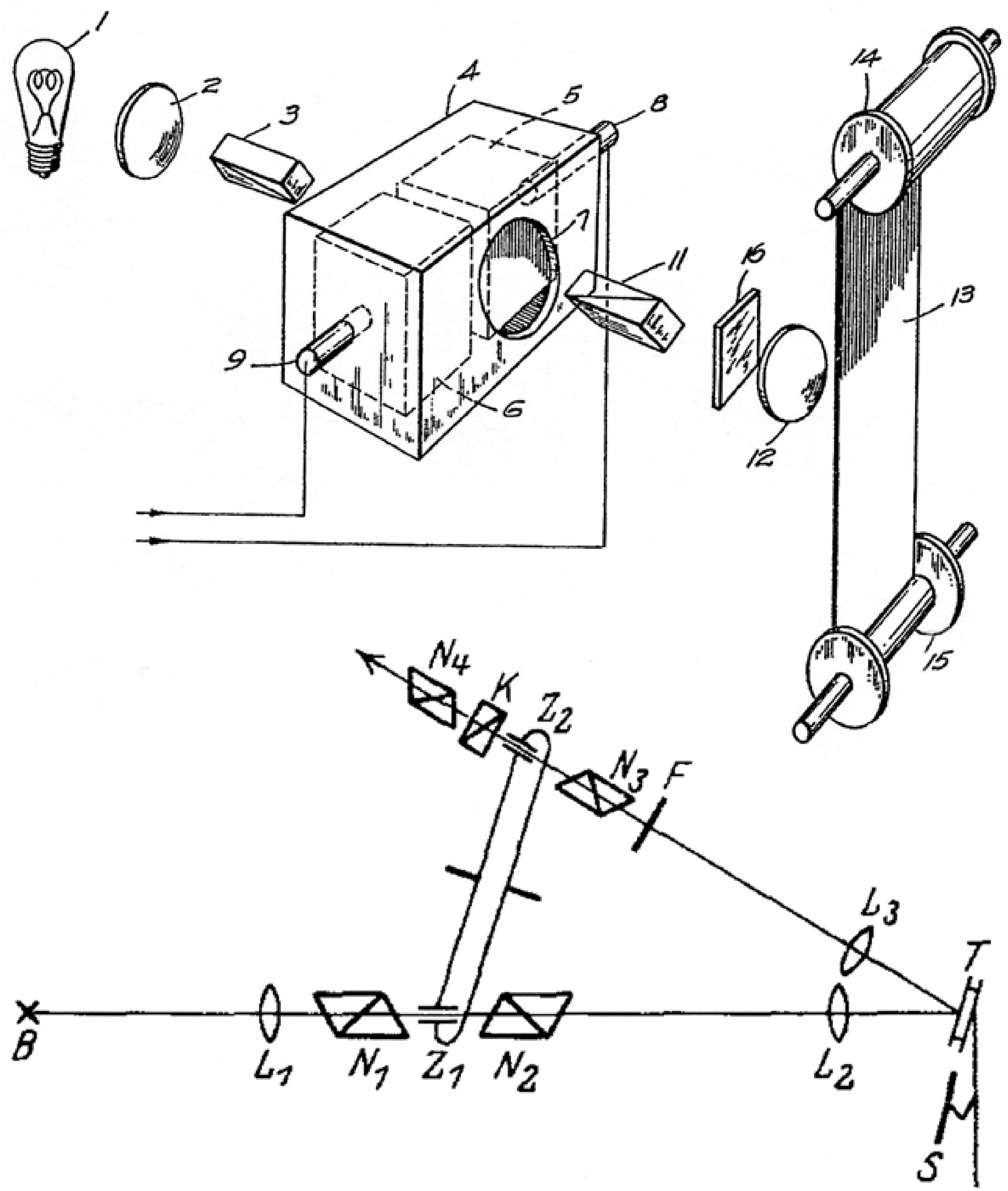

FFigure 38-3. Still more applications of the Kerr effect. *Top*: A method patented by Gallahan (1931) for producing a sound track on a movie film, with a Kerr cell (in the box) placed between the two Nicol prisms no. 3 and 11. *Bottom*: Gaviola's (1927) setup to measure fluorescence decay times (of the order of nano-seconds) in solutions of fluorescent dyes. A light beam from the arc lamp B falls on the liquid in T. Light emitted by the liquid is observed through a Kerr cell Z2 very soon after the beam from B is interrupted by the Kerr cell Z1. The equipment contains four Nicol prisms N and a calcite plate K.

This technique was in use for a couple of decades (Rinner and Benz 1966). It may be added that A. Karolus returned to light-speed measurements around 1960, employing among other things laser light, a piezoelectric modulation technique, and Nicol prisms (Karolus and Helmberger 1967).

39 On new applications of Iceland spar from around 1930

After the early 1920s, there is a decreasing probability that Nicol prisms or other components in new instruments and experiments are made of Iceland spar from the Helgustadir or Hoffell sites. In some cases however, suppliers or equipment producers may have been using up stocks originating from Iceland. Also, scientists who needed a prism or two for temporary use, are likely to have borrowed older prisms from others (e.g. Rayleigh jr. 1921) or removed them from decommissioned equipment. The following sections are meant to give an impression of various selected fields of science and technology where Nicol prisms played a part from the 1920s onwards.

39.1 The production of instruments containing Nicol prisms from around 1920

New models of Iceland spar polarizing prisms which were introduced in 1928-60 include the half-shade prism of Schönrock (1928, p. 750), a small prism by Cotton (1931) of the Dove type, an asymmetric calcite/glass Rochon prism (Hardy 1935), Foster's (1938) prism for reflected-light microscopy, the Glan-Taylor prism (Archard and Taylor 1948), the prism of Bouhet and Lafont (1949), the Marple-Hess prism from around 1960, a double Ritter-Frank prism, and so on. These developments continued later, as may be seen e.g. from Bennett and Bennett (1978). For novelties in phase compensators, see Jerrard (1948).

Among European firms producing polarimeters after 1920 were A. Hilger (Fig. 39-2) and Bellingham & Stanley in London, C. Reichert in Vienna, Schmidt & Haensch and C.P. Goerz (Fig. 39-2) in Berlin, J. & J. Fric in Prague, Ph. Pellin and Jobin & Yvon in Paris, and R. Winkel (Fig. 39-2) in Göttingen (according to Tutton 1922, p. 1022, Struers 1925, Bruhat 1930, Bates et al. 1942, and manufacturers' catalogs). In the U.S., Bausch & Lomb in Rochester, N.Y. and the Gaertner Scientific Corp. in Chicago were probably the main producers around 1940. Typical instruments are illustrated in Figs. 39-1 and 39-2. After 1960 the polarizers and analyzers in less expensive models were probably made from improved types of Polaroid sheets, but Houben-Weyl (1955) and Moenke and Moenke-Blankenburg (1965) describe high-quality polarimeters and spectropolarimeters with Iceland spar prisms from manufacturers in several countries.

Among important new research topics in the field of optical activity were measurements of ultraviolet rotatory dispersion (mostly in organic compounds), which a few groups of scientists had initiated before 1930 (Lowry and Vernon 1928, Descamps 1930, Kuhn and Braun 1930; see Lowry 1935, chapter XVII). This technique later became valuable in investigations of the structure of proteins and nucleic acids. Optical activity was even being measured in those parts of the ultraviolet and infrared spectrum where calcite is not transparent; there, new polarizing prisms made from materials like quartz, titanium oxide (rutile) and magnesium fluoride appeared, as well

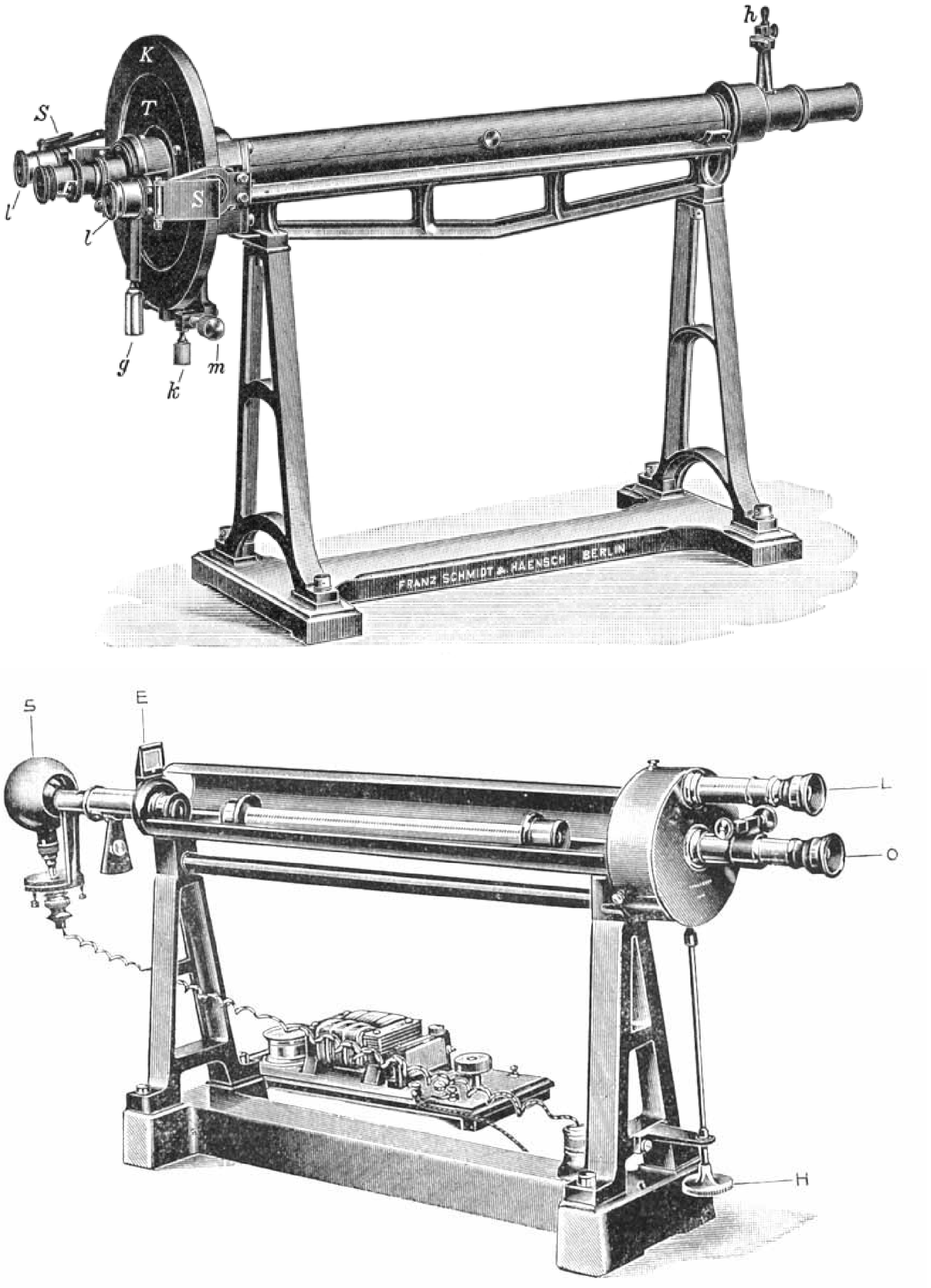

Figure 39-1. *Top:* A polarimeter from Schmidt & Haensch, with Lippich's half-shade prism (from Struers 1925). *Bottom:* A saccharimeter, probably of French origin. S is an electrical lamp. The observer turns the knob H until the two parts of a half-shade field seen through O are of equal brightness, then reads a scale with the eyepiece L (Bruhat 1942).

as new polarizing mirrors. Research on the Cotton effect (circular dichroism; see section 22.3) for instance aided in improving understanding of the photosynthesis process, as chlorophyll is one of the substances exhibiting this effect (see Mathieu 1956). Among other things, the presence of carbonyl-, thio-, azo- and nitro-groups in a compound could also be detected by their characteristic absorption of circularly polarized light (Mitchell 1933). Measurements of the Cotton effect and of optical rotatory dispersion were for a long while too time-consuming for routine application. This situation changed in 1953 with the appearance of automatically recording spectropolarimeters from the firm of H. Rudolph and Sons (see Douglas 1994). As an example, these instruments played an important role in investigations of the structure of steroids (which contain 5-8 asymmetric C-atoms). "Currently, no other physical tool can approach rotatory dispersion in its utility for settling stereochemical problems in the steroid field" says Djerassi (1960, p. 51), the pioneer in that technique who developed the contraceptive pill. Around 1960, new automatically recording spectropolarimeters used the Faraday effect (instead of quartz wedges or a rotatable analyzing prism) to measure the rotation of the plane of polarization of light in a fluid sample.

The mercury and cadmium lamps which were introduced for the study of optical rotatory dispersion also were powerful enough to enable measurement of rotation by colored solutions such as plant pigments. Among these was carotene ($C_{40}H_{56}$) which is found in carrots, other vegetables and berries, milk fat etc. It is important in photosynthesis, and is transformed into Vitamin A in animal bodies. Kuhn and Lederer (1931) demonstrated that carotene exists both in a strongly dextrorotatory α-form and an optically inactive β-form. The latter essentially consists of two molecules of Vitamin A, the former of one Vitamin A and a slightly different molecule. Further modifications of carotene were discovered around 1930 (Winterstein 1934, see Fig. 39-2). See Appendix 5.

During the first decade or two after the appearance of Polaroid sheets, their optical properties did not warrant their use in petrographic microscopes for detailed inspection and measurements. Cotton and Manigault (1946) even prefer using glass mirrors as both polarizers and analyzers in these microscopes. In the 1940s, interest in the use of polarizing microscopes in biology was also increasing (Vickers 1956), and here Polaroid was also inadequate for demanding work. With improved types of the polarizing sheets, Waesche (1960) considers them to have "virtually eliminated demand for optical calcite", although some still prefer Nicol prisms in their equipment. Zirkl (1961) also says in 1959 that the sheets "are in almost all cases a worthy substitute for calcite prisms". According to Moenke and Moenke-Blankenburg (1965) most producers of petrographic microscopes had incorporated sheet polarizers in their models by the early 1960s.

The enormous scientific and economic importance of microscopic examination of minerals and rocks during the 20th century should be evident to the readers. The review by Schmidt (1920a) and books by Johannsen (1914, p. 199) and Rosenbusch (1924) list the major producers of petrographic microscopes in western countries. Among the pioneers in that field were R. & J. Beck and J. Swift in London, A. Nachet in Paris, R. Fuess in Steglitz, Voigt & Hochgesang in Göttingen, and Steeg & Reuter in Homburg. Others include E. Leitz and W. & H. Seibert in Wetzlar, C. Reichert in Vienna, C. Zeiss in Jena, R. Winkel in Göttingen (e.g. Wülfing 1918, Fig. 39-3), Société Genevoise in Geneva, C. Leiss in Steglitz (see his universal stage microscope in Fig. 39-3, and other instruments in Leiss 1925), and Bausch & Lomb in Rochester, N.Y. The strong position of German firms in this field is no doubt in part connected to the vigorous research and development of glass- and lensmaking in Jena (see Moe 1990).

The firms of C. Reichert and E. Leitz also became known for their reflected-light microscopes. The latter originally produced a model MO which could be fitted with Nicol prisms after 1912. In their versatile polarization microscope designed by Scheffer (1919, Fig. 39-3), ore microscopy was one of the available options. Following the appearance of H. Schneiderhöhn's (1922) text on

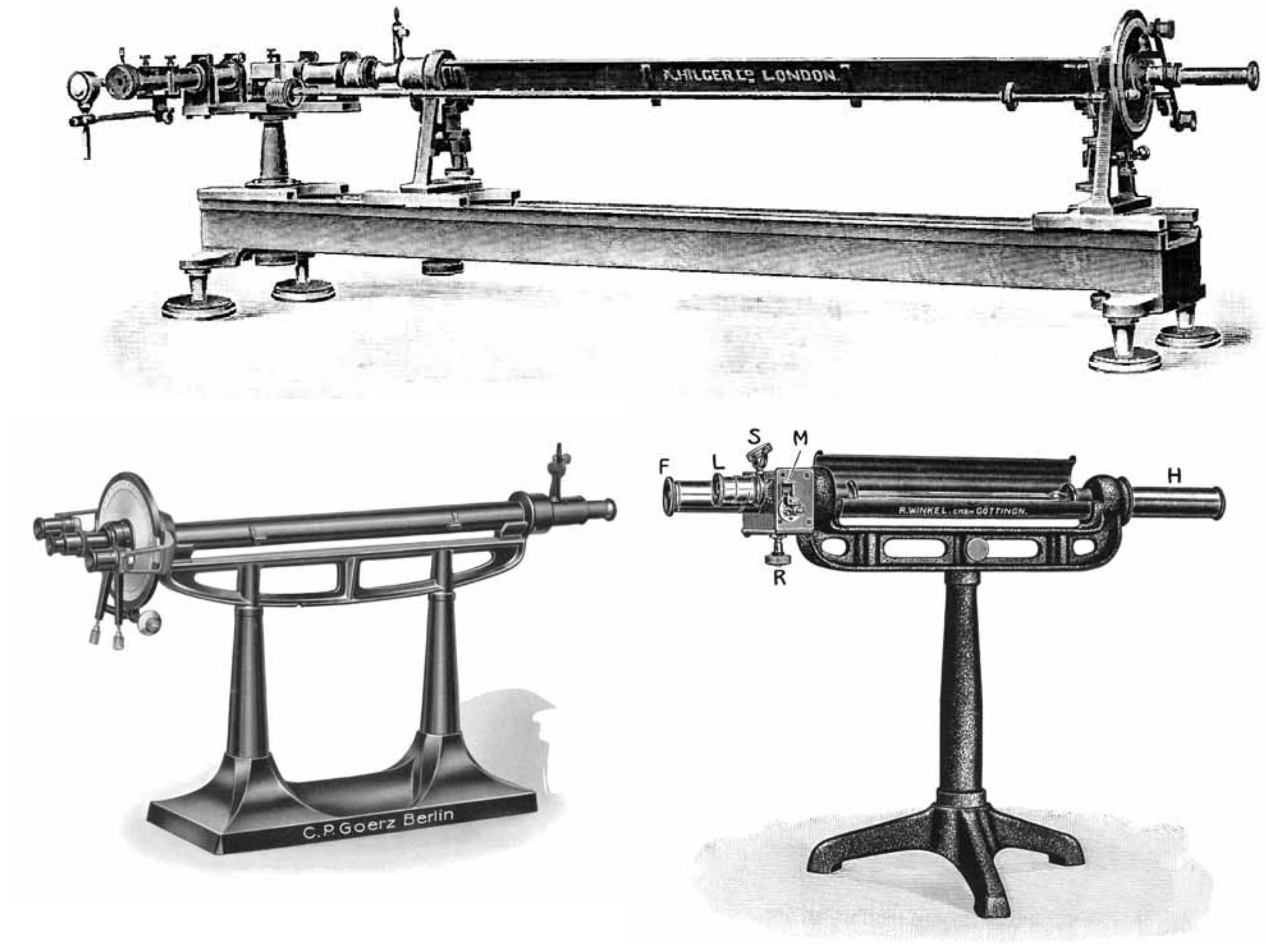

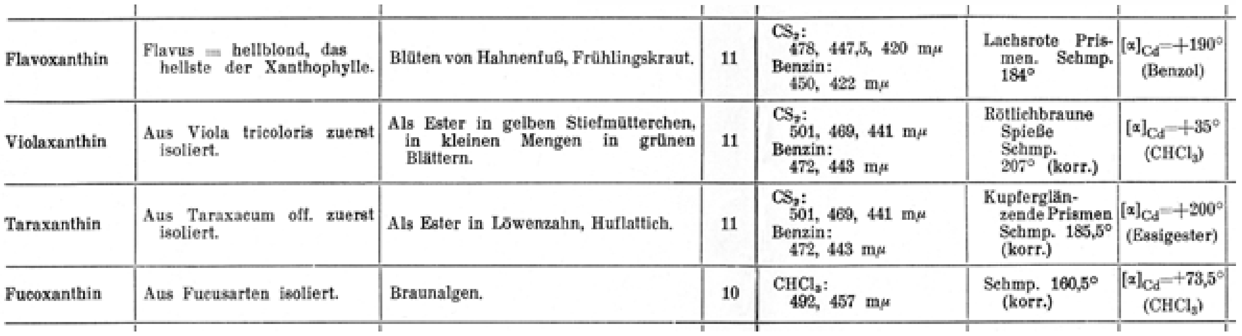

Flavoxanthin	Flavus = hellblond, das hellste der Xanthophylle.	Blüten von Hahnenfuß, Frühlingskraut.	11	CS_2: 478, 447,5, 420 mμ Benzin: 450, 422 mμ	Lachsrote Prismen. Schmp. 184°	$[\alpha]_{Cd} = +190°$ (Benzol)
Violaxanthin	Aus Viola tricoloris zuerst isoliert.	Als Ester in gelben Stiefmütterchen, in kleinen Mengen in grünen Blättern.	11	CS_2: 501, 469, 441 mμ Benzin: 472, 443 mμ	Rötlichbraune Spieße Schmp. 207° (korr.)	$[\alpha]_{Cd} = +35°$ ($CHCl_3$)
Taraxanthin	Aus Taraxacum off. zuerst isoliert.	Als Ester in Löwenzahn, Huflattich.	11	CS_2: 501, 469, 441 mμ Benzin: 472, 443 mμ	Kupferglänzende Prismen Schmp. 185,5° (korr.)	$[\alpha]_{Cd} = +200°$ (Essigester)
Fucoxanthin	Aus Fucusarten isoliert.	Braunalgen.	10	$CHCl_3$: 492, 457 mμ	Schmp. 160,5° (korr.)	$[\alpha]_{Cd} = +73,5°$ ($CHCl_3$)

Figure 39-2. More on polarimeters after 1920. *Top*: A polarimeter (right) connected to a spectroscope, from a 1920 catalog of A. Hilger Ltd. *Center left*: A medium circular-scale instrument from a 1924 C.P. Goerz catalog, for sample tubes to 40 cm long. *Right*: A versatile polari- and saccharimeter with quartz-wedge compensation, included in R. Winkel's 1925 price list. *Bottom*: Part of a large chart (Winterstein 1934) showing key properties of many plant pigments. These four were studied by the Nobel laureates R. Kuhn and P. Karrer, among others. The columns give the origin, number of double bonds, main absorption bands, melting point, and optical rotation (in cadmium light) of each pigment.

the use of reflected light and the marketing by Leitz of their large Erzmikroskop MOP in 1923, "whirlwind development" of this field within petrography took place (according to Schneiderhöhn in a 1941 Leitz Festschrift). Glaser (1924) describes various design features in reflected-light microscopy, intended for instance to study internal tensions in metal alloys. It appears to me from a cursory look at the literature, that while polarizing arrangements are fairly widespread in present-day microscopical metallography, they were not much used before 1930 (Schwarz 1931).

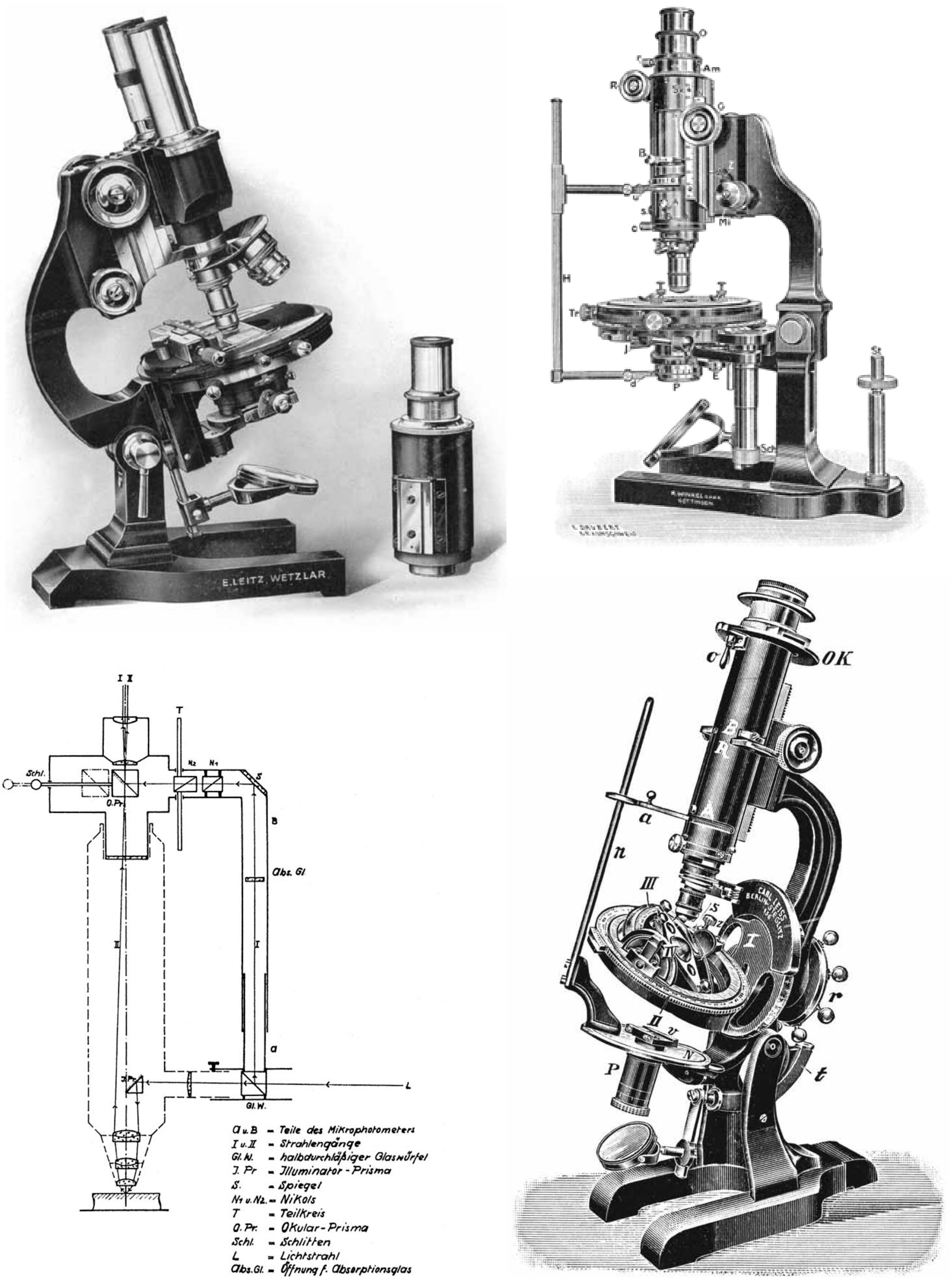

Figure 39-3. New microscopes. *Top left:* Scheffer's (1919) versatile microscope from E. Leitz, which among other things allowed observations in reflected polarized light. The picture is from Schneiderhöhn (1922). *Right:* A sophisticated instrument designed by Wülfing (1918) and produced by R. Winkel (from Leiss 1925). *Bottom left:* Frick's (1930) polarization photometer for Leitz reflected-light microscopes. *Right:* A universal-stage microscope offered by Leiss (1925), incorporating various improvements on older models.

Their application in metal research also has been relatively less than in work on ore minerals. This is perhaps due to the fact that many common metals and alloys belong to the cubic crystal system, and in others the reflections are not very dependent on polarization direction (Dayton 1935). In a review paper, Mott and Haines (1951) state that uranium (orthorhombic) and beryllium (hexagonal) are the metals most often investigated in polarizing microscopes, which is connected to their role in the harnessing of nuclear energy.

From a cursory inspection of the scientific literature, photometric devices based on the photoelectric effect and on the photoconductivity of selenium, were becoming reliable enough for a variety of applications by the mid-1920s. I have not looked much into the fortunes of visual polarizing photometers for white light after 1930, but the photometric attachment of Frick (1930, Fig. 39-3) for reflection microscopes may be mentioned here. Berek (1931) published an important paper on precise analyses of ore minerals in such microscopes, where Nicol prisms were used both in the measurement of polarization and intensity of the reflected light. This was possible due to Berek's invention of a new glass prism which altered the direction of a light beam by 90° without affecting its state of polarization (German patent no. 630359, awarded in 1936). These microscope photometers were produced to 1960 at least. Hoffmann and Jenkner (1932) confirmed a result by Königsberger referred to in section 29.3, that the reflectivity of a polished coal-sample surface increased with the quality of the coal. This has been economically important in coal technology (Broadbent and Shaw 1955). Sauer (1934) of the Zeiss company developed a new polarizing photometer, and Beck (1943) described improvements on the Martens photometer in the middle of WW II. An illustration of the latter may be found in a widely read textbook (Bergmann-Schaefer 1959), accompanied by the assertion that Nicol prisms are "particularly well suited for photometric work". The book also contains an illustrated description of the polarizing photometer Leifo which E. Leitz began producing in 1933. Leifo was for a long time a popular instrument for routine colorimetric work, for instance in chemical analyses of metals and alloys, in biochemistry and medicine, and in environmental science. An updated version containing a photoelectric sensor is displayed in the book of Moenke and Moenke-Blankenburg (1965).

I.G. Priest who was mentioned at the end of section 29.4 and in section 29.7, later added two quartz plates to his three-prism photometer, in order to estimate quantitatively the color of a light source (Priest 1923). A somewhat similar instrument with five Nicol prisms was later invented by Dowell (1931) and sold commercially. See both in Fig. 39-4.

Of course the development of various types of spectrophotometers which attenuated light beams by means other than Nicol prisms (see at top of section 29.4), continued from 1870 and into the 20th century. However, the polarizing types including new versions e.g. by Gehlhoff and Schering (1920) did survive to some extent up to 1950 at least. Skinner (1923, p. 736-737), Optical Society of America (1925) and Houstoun (1927) discuss them briefly; Houstoun indeed states (p. 324) that they are "much the most popular" of spectrophotometers, and so does Weigert (1927, p. 125). E. Brodhun claims in a review in Ergebn. Exakten Naturwiss. in 1927 that the König-Martens meter continues to be the most commonly used visual spectrophotometer both in Germany and abroad. The Lemon (1914) instrument was produced commercially (Fig. 39-4), a new versatile one was introduced by the firm of Jobin (1922), and another one by Bellingham & Stanley (Schoen 1927). In a chapter on photochemistry in Abderhalden's Handbook of Biological Laboratory Methods published in 1926, T. Swensson informs readers that "the best spectrophotometers depend on the polarization principle". He mentions in particular the Hüfner and the König-Martens instruments, which may be used in the whole range of visible light. Weigert (1927, p. 193) also praises the König-Martens meter. In a paper on methods of light-absorption measurements, Laszlo (1928) states that most of these methods depend on Nicol prisms. He cites as examples a new Bellingham & Stanley spectrophotometer and the König-Martens instrument. The latter was still on the mar-

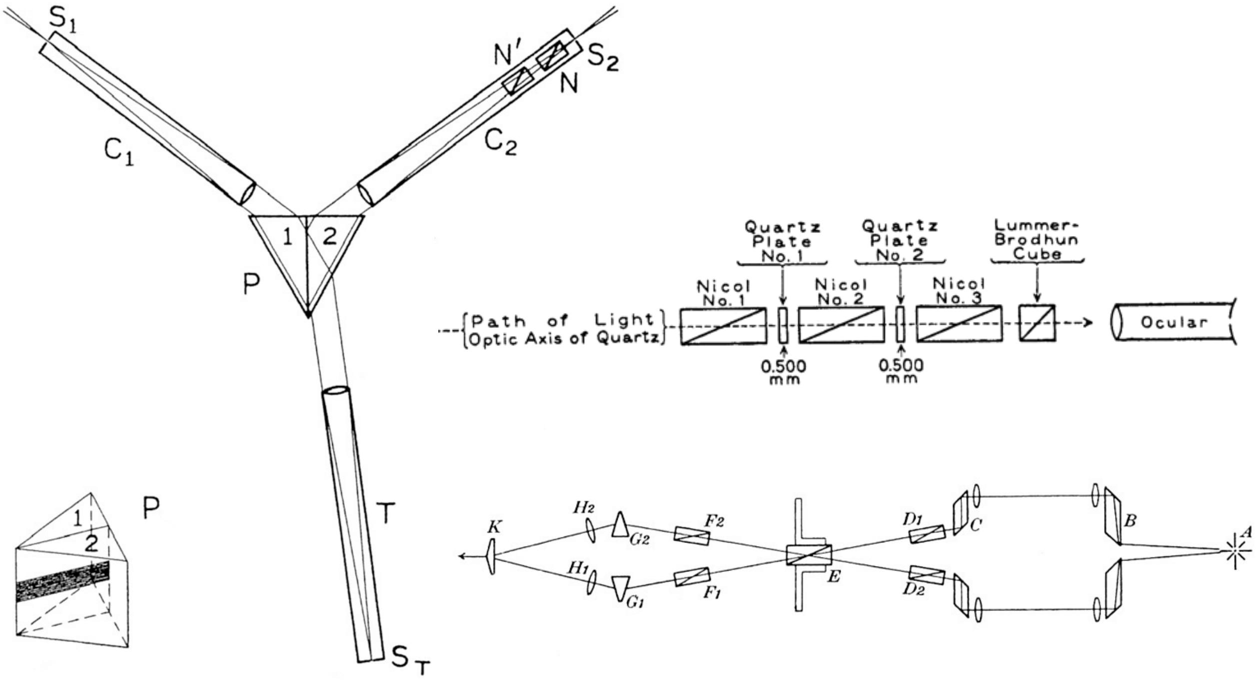

Figure 39-4. Photometers after 1920. *Left:* Lemon's (1914) photometer, later produced by Gaertner Scientific Corp. In the telescope T, the experimenter compares light from C_1 and a more intense light from C_2; images of these two appear side by side in the bisected glass prism P. By rotating one Nicol prism, he attenuates the light in C_2. The diagram is from a committee review (Optical Society of America 1925). *Top right:* Priest's (1923) device for comparing the unknown brightness and color of an area to the left, with a standard light source below the Lummer-Brodhun prism. The experimenter is looking from the right. *Bottom:* The polarizer part of a photometer suggested by Dowell (1931). It has four fixed Nicol prisms and one (E) to be rotated. A is the light source. For instance, a vial with a fluid to be analyzed can be inserted into one of the two horizontal light beams. E is then rotated until the light spots seen from K appear to be of equal brightness.

ket in the U.S. around 1940, along with at least three other polarizing spectrophotometers (Bates et al. 1942, p. 304-310), and it was widely in use in Europe as late as 1955.

Some of the available flicker photometers mentioned in section 29.4 were of the polarizing kind. Photoelectric sensing and recording of the light intensity was well suited to the flicker instruments, because a rapidly alternating voltage is easier to amplify than a quasi-steady one (see e.g. Tardy 1928, Bruhat and Chatelain 1933, Hardy 1935). One such spectrophotometer with Rochon-, Nicol- and Wollaston prisms was designed by Hardy (1935, 1938) and mass produced by General Electric Co. It soon served in a variety of roles including calibration of reference samples for colorimeters, in the metal industries, in the construction of the first atomic bombs (according to the book Analytical Chemistry of the Manhattan Project, published in 1950), and in the production of dyes for color photography.

Around 1920 or earlier, chemists' interest in the use of ultraviolet spectrophotometry (especially for measuring light absorption by chemicals) had become sufficiently widespread for manufacturers to start offering such equipment. For instance Lowry and French (1924) use a new ultraviolet spectrophotometer (similar to the Nutting meter of section 29.5) that probably contained Iceland spar prisms, in their research on camphor compounds. According to Weigert (1927, p. 125-130, 156-157, 199-200) an ultraviolet meter of the König-Martens type is available from Schmidt & Haensch, and he also describes special versions of that instrument for measurements on thermal and other infrared radiation.

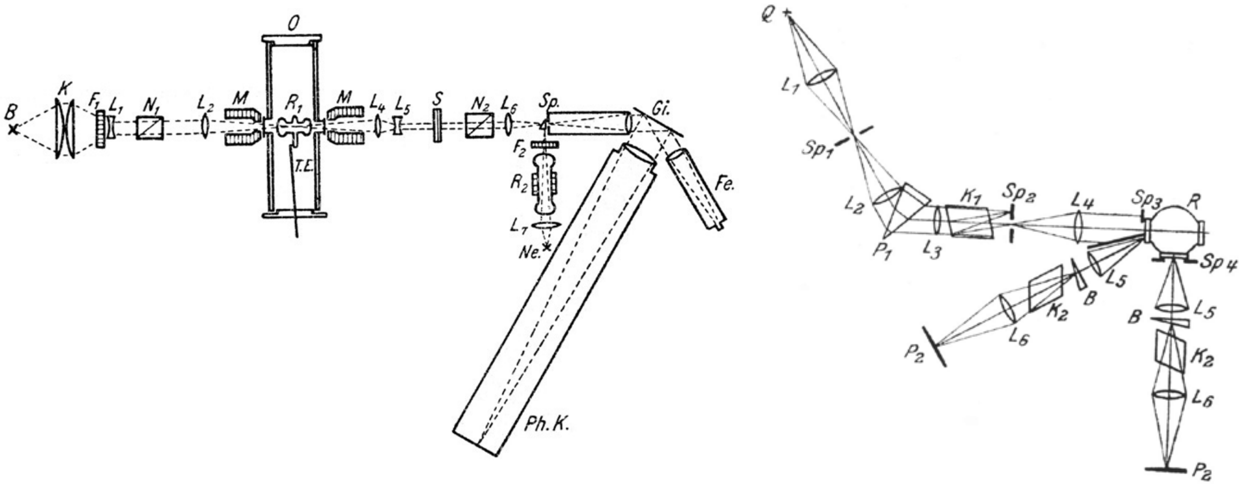

Figure 39-5. *Left:* Minkowski's (1921) test of quantum-mechanical theories concerning the Faraday effect in sodium vapor. Polarized light comes from the left through a glass vessel R containing the vapor in the oven O in a magnetic field. It is then analyzed by means of the Savart plate S, a Nicol prism, a diffraction grating Gi and the camera Ph.K. *Right:* Hanle's (1926) investigations of the effects of electric and magnetic fields on the polarization of resonance radiation from mercury vapor in the glass bulb R. Ultraviolet light from Q excites radiation which is then measured with the equipment below (shown in two positions). K_1, K_2 are calcite rhombs or Nicol prisms, B is a phase compensator, P_2 is a photographic plate.

39.2 Astrophysical observations by B. Lyot and others

B. Lyot (1926, Fig. 39-7) constructed a very sensitive polarimeter containing a thin plate of Iceland spar, in order to measure very small (to 0.1%) proportions of linearly polarized light mixed with unpolarized light. He pointed this instrument at e.g. the moon and five planets (Lyot 1923, 1929, etc.) and compared the results with light reflected from various surfaces. One of his conclusions was that the surface of the moon, and even also those of Mars and Mercury, might consist of rock dust or cindery material. Wright (1927a,b, 1934) similarly analyzed the moonlight with a polarimeter and polarizing photometers, considering it to be reflected from a powdery substance rather than solid rock. Lyot's concept later led to the development of equipment (Harrington et al. 1956) to measure the polarization of fluorescence, which yielded information on certain properties of large molecules such as proteins.

Öhman (1933) who was making measurements on the polarization of starlight around 1930, used an Iceland spar rhomb to aid in the determination of star magnitudes from photographs. His method may not have been entirely original, as Leavitt (1914) had employed two Iceland spar plates in a similar way in her survey of circumpolar stars from 1909. Öhman carried out various studies on astronomical polarization up to around 1950.

Let a large object emit light of a wide range of wavelengths, and let us want to look at the whole object simultaneously to see how the emission of light of a chosen wavelength interval is distributed across the object's surface. If this interval is wide, it can be done easily with ordinary color filters. If the desired interval is very narrow (for instance containing only the red hydrogen spectral line), neither such filters nor spectroscopes turn out to be adequate. One solution is to use so-called interference filters, which are most commonly based on multiple reflections in very thin transparent films. A type invented by B. Lyot (1933) employs interference of polarized light (cf. Fabry and Perot 1900). For each individual filter, thin plates of quartz or Iceland spar are needed in addition to a large number of good-quality polarizing prisms. Lyot could not procure these until 1939 when he (Lyot 1944, 1945) was given a "beautiful rhombohedron of Iceland spar". A less satisfactory version with Polaroid sheets was in use from 1938, and in fact the above-mentioned Öhman (1938) had independently developed the same concept. The Lyot filters soon became very useful for studies of the solar surface, and Lyot also took with them movies of transient phenomena in the corona. According to Evans (1949), quartz had mostly replaced calcite in Lyot filters by 1950.

The third Iceland spar device invented by B. Lyot for astrophysical research (after 1940) contained a rotatable thin plate of Iceland spar. With this device mounted in a telescope, very small angles (for instance between double stars) could be measured in a similar way as was done with Rochon and Wollaston prisms long before (section 12.1). The Lyot micrometers are still being used.

39.3 Light and magnetic fields, from around 1925

In a 1944 textbook on quantum chemistry, H. Eyring and his co-authors stated that "…investigations of the Zeemen effect provide one of the most powerful tools for the determination of the states involved in atomic spectra". In the wake of the Stern-Gerlach experiment and theoretical contributions by W. Pauli on A. Landé's rules of spectral relationships (section 30.2), G.E. Uhlenbeck and S. Goudsmit suggested in 1925 that electrons had a quantized property called "spin". This provided an explanation both of the anomalous Zeeman effect and of the low values of the ratio e/m for electrons obtained from the Faraday effect. In turn it led to new theoretical work by Rosenfeld (1928) on the reasons for optical activity in liquids and gases, which was the first such investigation based on quantum mechanics.

A. Cotton who has been mentioned previously, began in 1912 to seek funding for a very large research electromagnet. The various effects of magnetism on optical processes were among the chief motivation factors in these efforts, but reasons given by Cotton (1914) also include interest in measurement of magnetic properties in materials like Iceland spar. After some delays due to the World War, Cotton and others managed to install a 100-ton 100-kW electromagnet in Paris in 1928. Various related equipment was added later, such as a large fixed magnet, spectroscopes, and low-temperature facilities. Many important discoveries were made with this apparatus in the following decades, both regarding magnetic effects on light and in other areas such as nuclear physics. Cotton himself carried out observations on one class of the Cotton effect which only occurs in magnetic fields (magnetic circular dichroism); this phenomenon has proved to be quite useful in research on all kinds of magnetic materials. The interaction of magnetism and light in matter no doubt prompted others to improve their experimental equipment within that field; for instance, Kapitza and Skinner (1925) studied the Zeeman effect in radiation emitted inside current coils while a powerful accumulator was momentarily short-circuited through them.

J. Becquerel who appeared in section 30.2, continued his interesting research on the Faraday effect and related phenomena (especially in paramagnetic compounds at low temperatures) from 1925 (Onnes et al. 1925) and into the 1930s. The Kerr magneto-optical effect which was mentioned in chapter 23, is in fact a manifestation of the Faraday effect in ferromagnetic materials. These effects provided valuable insight into the nature of magnetism, which would have been difficult to obtain by other available methods. See e.g. Ingersoll and Vinney (1925) who investigated the magnetic properties of very thin layers of nickel. The Kerr effect has also been utilized in the late 20th century, in for instance magneto-optical disks for large computer memories and storing of images.

An important aspect of the development of quantum theory concerned its ability to predict the probabilities of an electron to move from one of its energy levels in an atom to another level. In its original form, quantum theory seemed to have nothing to say about such transition probabilities, but Einstein (1917) was one of the first to apply the theory to this aspect. The transitions are a key element in the interaction between light and atoms, governing among other things the dispersion behavior of materials. Experimental tests of the predictions of the quantum theory in this case included for instance the measurement of the relative intensities of neighboring spectral lines under given conditions (as discussed at the end of section 29.4). The relative intensities of the subordinate lines into which a spectral line was split in the Zeeman and Stark effects, could also throw light on transition probabilities. These intensity measurements were from 1920 or so mostly made on photographs, and photometers with Nicol prisms (especially the Martens photometer) may have played some role there, but other instruments were employed in the many examples which I have looked up. On the other hand, it was found that the transition probabilities in for instance hot metal vapors could be obtained by measurements of dispersion, absorption and Faraday-effect rotations in the vicinity of their spectral lines. Some data on such processes were already available (Senftleben 1915) and more were acquired by Minkowski (1921, Fig. 39-5), Ladenburg and Reiche (1923), Ladenburg (1926), Weiler (1929) and others. Iceland spar prisms were used in many of these studies.

Polarization of light also was involved in the theoretical interpretation of absorption of light by matter in magnetic fields, of band spectra and other phenomena. They were, like those of the last paragraph, connected to the emergence of the new and powerful version of quantum theory based on papers by W. Heisenberg and E. Schrödinger in 1925-26. Thus, Wood and Ellett (1923, 1924) found an unexpected effect by magnetic fields on the polarization state of so-called resonance radiation from low-pressure mercury vapor. This radiation is a type of fluorescence, characterized by the emitted light having the same frequency as the incident light. It occurs when an excited electron only has a single energy level which it is permitted to drop down to. The best known cases are an ultraviolet line of mercury (253.67 nm) and the two yellow sodium lines (near 589.3 nm) which R.W. Wood had in fact started investigating earlier (Wood and Hackett 1909, Wood and Mohler 1918). The phenomenon was studied in more detail by for instance Rayleigh jr. (1922), Gaviola and Pringsheim (1924), Hanle (1924, 1926, Fig. 39-5), Keussler (1927), Foote (1927), and Schein (1928), and its theoretical basis in terms of quantum postulates was discussed by W. Hanle, V. Weisskopf, N. Bohr, W. Heisenberg, and G. Breit.

One of those who became interested in resonance radiation was a young physicist by the name of E. Fermi. He wrote his first scientific paper (Fermi and Rasetti 1925) on a study of the polarization of this radiation from mercury vapor in high-frequency magnetic fields, using two calcite crystals. This paper marks the beginning of research in the “double resonance” method of spectral analysis of electromagnetic radiation. A. Kastler (1931) carried out a special experiment on the polarization of sodium resonance radiation in a magnetic field, to test the fundamental question of whether photons carry angular momentum. In his subsequent research on the Zeeman effect and resonance radiation, Kastler and his coworkers developed around 1950 a technique called “optical pumping” based on the double resonance concept. In this technique, metal vapor in a magnetic field which is absorbing polarized light at its resonance frequency, is simultaneously made to absorb a low-frequency electromagnetic radiation. The magnetic field splits the excited energy level of the vapor into two, and temporarily (due to the low-frequency radiation absorbed) more electrons end up occupying the upper one than the lower one. See Appendix 5 on Fermi and Kastler. Budker et al. (2002) claim that all the above research on polarized resonance radiation has its origin in the paper of Macaluso and Corbino (1898) from section 30.1. It has provided the foundation for a large new field of physics, leading to the development of important technologies such as lasers, very sensitive magnetometers, and atomic clocks which are essential to for instance space travel and the operation of accurate navigation systems.

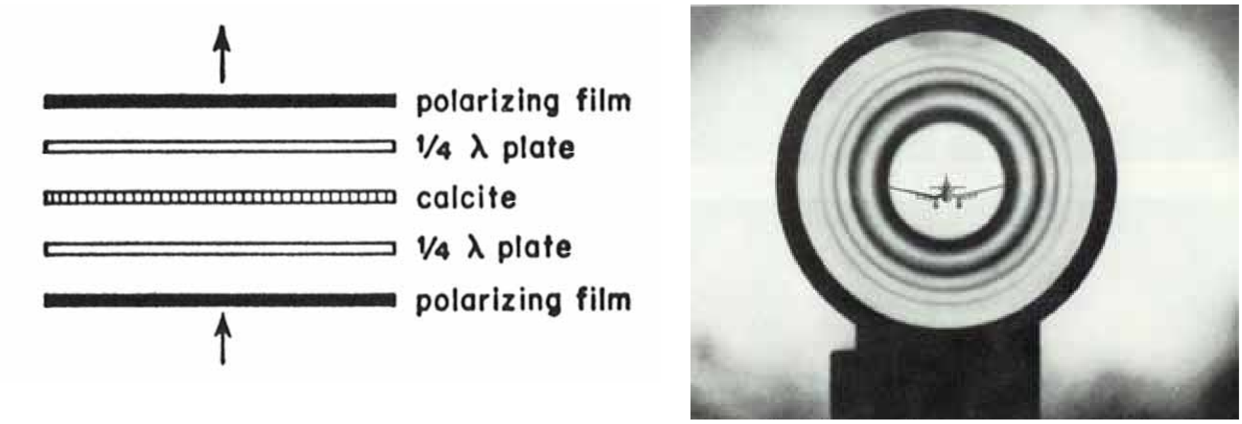

Figure 39-6. Polaroid Corp.'s Optical Ring Sight from World War II. *Left:* A drawing of its composition. *Right:* Taking aim at an aircraft. The rings followed the eye of the gunner so that it did not have to be directly over the center of the sight (Wood 1977). The diameter of the device was 3-4 cm and its thickness about 0.5 cm (L. Hughes, pers. comm. 2001).

39.4 The "Optical Ring Sight" and large-scale calcite mining in the U.S. and Mexico

When the United States entered WW II, their production of large and small gun sights increased greatly. Military officials were not quite happy about the traditional sights, which were too bulky and inconvenient in use. The above-mentioned founder of the Polaroid Corporation, E.H. Land, then invented a new and simple sighting device based on interference of convergent light in thin uniaxial crystal plates (Fig. 7-3). Land replaced the prisms which are used when such interference figures are observed in microscopes, by Polaroid sheets to make the device very compact. In this gunsight, only concentric circles are seen, as the black cross of Fig. 7-3 could be eliminated by placing quarter-wave plates on each side of the central plate (Fig. 39-6) of Iceland spar. This was by no means a new idea, as such a situation had already been demonstrated or analyzed theoretically by N.N. (Nicol 1829 in the list of references), Airy (1833a), Müller (1834), Dove (1835, p. 607), Wilde (1853), Soleil (1855b), Bertin (1859, 1884), Preston (1895), and Pellin (1899, Fasc. IV). Land (1947) was nevertheless granted a patent on this optical ring sight, as it was called.

Now, Land's company needed a large quantity of Iceland spar, preferably in rhombs like the Icelandic material, at least 3 cm in size and relatively free of defects and twinning although not necessarily of Nicol-prism quality. H. Berman of Harvard University who was advising the Polaroid Corp., sent a message to Iceland in March 1942 enquiring about the matter (L. Hughes, pers. comm. 2003) and the U.S. military again made enquiries in 1944. This does not seem to have had much effect. In the memoirs of a California journalist (Ainsworth 1948) Berman is quoted indirectly as having told Land (presumably in early 1942) that the world's only sources of supply of optical calcite in Iceland and Turkey are exhausted. In view of the efforts and funds clearly allocated to the search for suitable calcite deposits, it is strange that the Hoffell site was not considered. I have not seen Turkey mentioned anywhere else in this context.

A sizable amount of Iceland spar turned out to be present at a locality in the Taos county of New Mexico, discovered in 1931 but not exploited until 1939-40 (Johnson 1940, Kelley 1940, Hughes 1941, a news item in the Albuquerque Journal 2 Feb. 1942, and DeMille 1947). It was considered that this mine was not far behind Helgustadir in total quantity and in the size of crystals: Blazek (1976) states that two crystals of more than 25 tons each had been found there. In the beginning it seemed (cf. a news item in J. Appl. Phys. 11, p. 708, 1940) that this source would be able to supply

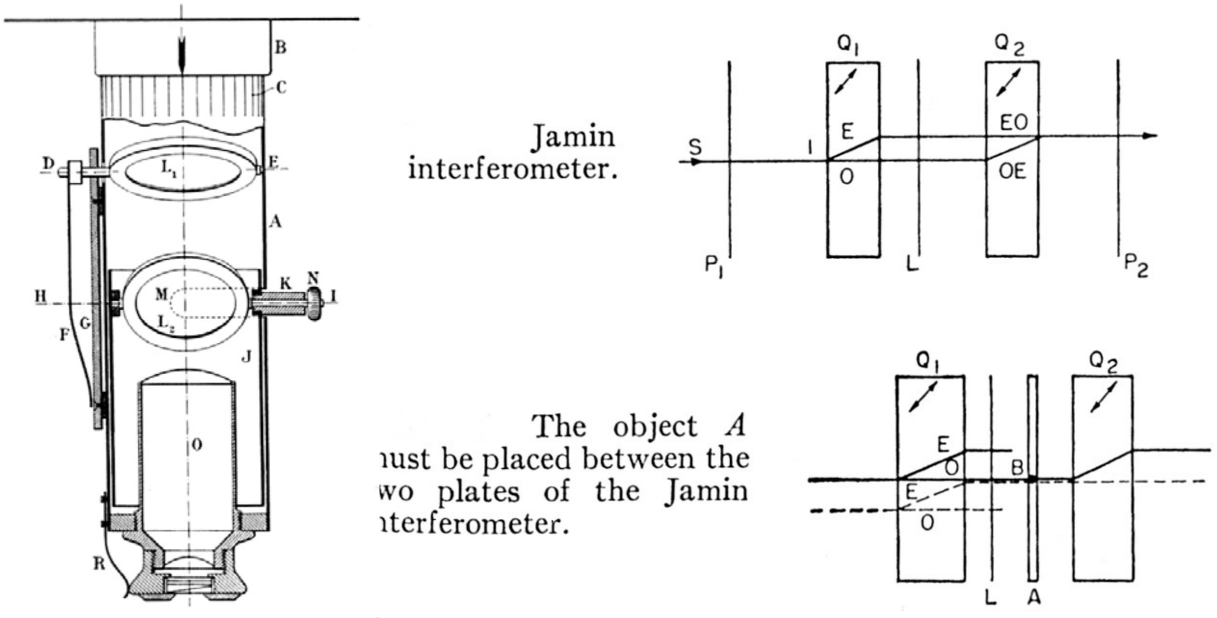

Figure 39-7. Two very sensitive interferometers based on Iceland spar. The principles of their operation will not be explained here. *Left:* Lyot's (1926) instrument which detects a small polarized proportion in a light beam, received for instance from a planet. The light enters from above through the glass plates L_1, L_2 which can be tilted, to the eyepiece O. At the base of O there are two identical Iceland spar plates and a beam-splitting prism of Iceland spar and glass. *Right:* A schematic diagram of Lebedeff's (1930) interferometric method to display small changes in the thickness or index of refraction of the specimen A (such as a histological thin section) as changes in brightness when viewed from the right. Q_1, Q_2 are two identical thin Iceland spar plates, P_1, P_2 are Nicol prisms and L is a quarter-wave plate (Françon 1957)

both the needs of the ring sight production and the U.S. optics industry for a long while; however, according to minutes of the appropriations committees of the U.S. Congress which are accessible on the Internet, it had possibly been depleted already by the end of 1943.

Good Iceland spar was found in Tertiary volcanics in several places in Northern Mexico in 1942 (Fries 1948), mostly in the vicinity of Chihuahua. About 9 tons were mined here in total in 1943 and 1944, although only a small proportion was first class. King (1946, 1947) describes various aspects of the efforts in the search for Iceland spar, its recovery, and the grading of the crystals. Some Iceland spar was obtained from Montana (cf. above), about 4 tons in 1942-44 (Stoll and Armstrong 1958), and 3 tons from California in the same period (Wright 1950). South- and Southwest Africa, Spain, and Colombia also delivered minor quantities.

The mining of Iceland spar in both the U.S. and Mexico ceased in the fall of 1944, when Land's Polaroid Corp. succeeded in growing saltpeter crystals (see West 1945 and Waesche 1960) to substitute for it in the optical ring sight. The sight was mostly intended for use in anti-aircraft and anti-tank guns (Stoll and Armstrong 1958, p. 431, McElheny 1998, p. 132). It appears to have been primarily installed on Navy supply ships and on merchant freighters, but L. Hughes (pers. comm. 2001) who has researched the history of the ring sight, concludes that its appearance on the war scene was too late to have a significant effect. The surplus optical-quality spar from the procurement efforts found its way to optical instrument makers and other users in the United States, "greatly exceeding their immediate needs" (King 1947).

39.5 Iceland spar in interferometry

At the beginning of chapter 18, two instruments invented by J. Jamin were described. They were intended for measurements of very small distances or very small variations in refractive indices, with the aid of interference of light. One of them which employed silver-coated glass plates and unpolarized light, became popular and is still in use. Occasionally, Nicol prisms and a phase compensator were also made use of, for instance by Clark (1906) in research on the optical properties of thin carbon films. Jamin's other type of instrument (Jamin 1868) which was based on interference between polarized rays, was largely forgotten (see however Kerr 1888) until revived by Skinner and Tuckerman (1911), Sagnac (1911) and others. They pointed out that through a certain kind of interference effects, the half-shade arrangement of Brace (1904a) could make the path difference of two rays visible as a change in light intensity even if it was less than 0.01% of a wavelength. The method required high-quality polarizing prisms and was difficult to use, but Lebedeff (1930) found a practical way of employing it in microscopes, Fig. 39-7.

Rapid technical development of this method took place from around 1950. Production began of interference microscopes with Nicol or Wollaston prisms, for examination of transparent objects (especially biological materials) where the refractive index varied very little across a sample slide (Françon 1952, Nomarski 1954, Smith 1955, Huxley 1957). These microscopes resembled in certain respects the simpler and better known phase-contrast microscopes for biologists, which edged them to some extent off the market after 1970 (according to Dunn 2005). Living cells could be studied with the interference microscopes (e.g. Davies et al. 1954), which is said to have led to notable discoveries concerning the structure of cells and their movements. Analogous techniques in polarized light were also applied to the study of small deformations of surfaces, of air currents in wind tunnels, and of other phenomena involving very small variations in the phase of a light wave (Françon 1957, 1963).

It may also be mentioned here that interference methods were tested earlier in investigations of the flatness of cleavage surfaces on Iceland spar and other crystals (Siegbahn 1933). This was connected to evaluation of their suitability for X-ray spectroscopic work.

39.6 Pockels cells

The demand for polarizing prisms must have increased with the spread of laser devices after their invention around 1960 (cf. Nester and Schroeder 1967, Coetzee 1976). In a laser beam, considerable energy travels through a small cross-sectional area, and this can lead to rapid damage of Polaroid sheets or their successors due to the heat produced (e.g. Zirkl 1961). I have not looked much into the early history of the many applications of lasers, but one topic will be described briefly here.

Chapter 23 above mentions the effect of electrical fields on refractive indices of crystals which is named after F. Pockels (1891, and later). It occurs in those crystal classes which lack a center of symmetry (20 out of 32), i.e. the classes that exhibit piezoelectricity. This makes the effect different from the Kerr electro-optical effect which only is found in liquids and gases. Another difference between these two is that in the Pockels effect the change in refractive index is a linear function of the field strength, while the magnitude of the Kerr effect is proportional to its square. A transparent crystal fitted with two electrodes can then function as a controllable phase compensator for light in the same way as a Kerr cell. With a Nicol prism on each side of the crystal, we have a means of modulating the intensity of light beam, even shutting it off altogether.

Suggestions for technical applications of this effect in e.g. television sets had already appeared around 1930, cf. British patent no. 375856 and U.S. patent no. 1,879,138 (both granted in 1932) concerning the use of Rochelle salt to control light. Among suitable crystals is the compound $NH_3H_2PO_4$, i.e. ammonium dihydrogen phosphate, ADP. After WWII the Polaroid Corporation intended to base production of color television sets on the Pockels effect in this material (Land

1950), but very different approaches by competitors won that race. Before 1960, crystals of other compounds from the same symmetry class were being grown artificially for use in optics technology, including $LiNbO_3$ and KH_2PO_4 (KDP). However, the light beam really needs to be quite monochromatic and parallel (see Goldstein 1986). These conditions could not be fully met until laser light became available in the 1960s. In recent decades, people have mostly employed the so-called longitudinal Pockels effect, where the electrical field is parallel to the light beam. This variant of the effect primarily occurs in cubic or uniaxial piezoelectric crystals not having optical activity, which limits the choice to two crystal symmetry classes. Pockels cells do not require as high electrical voltages as Kerr cells, have shorter response times (less than 1 ns), and are probably easier to handle. They have found applications in many types of apparatus, for instance in fiber-optics communications, video recording, and laser distance meters. Non-linear Pockels effects have also become important in optical technology.

39.7 The Raman effect

When a clear or turbid liquid is illuminated by an intense monochromatic source, spectroscopic examination shows the light scattered sideways to have precisely the same wavelength. C.V. Raman who was mentioned in section 36.7, succeeded with his collaborators in challenging this well-known experimental fact in 1928. If the light from the spectroscope falls on photographic paper for many hours, the photograph eventually exhibits a very faint line spectrum in the vicinity of the original spectral line. For a while this phenomenon was thought to be of the same character as the Compton effect, but it turned out not to be the case. The frequency shifts in the new lines correspond to certain resonance oscillations within the molecules of the fluid. The frequencies of these oscillations are much lower than those of visible light, as was the case in the molecular oscillations which can be excited in the liquids by infrared radiation (section 34.1). It is specifically stated in the first papers on this Raman effect (Raman 1928, Raman and Krishnan 1928) that the pronounced polarization of the frequency-shifted light (observed with Iceland spar prisms) contributed to the conclusion that it was a kind of scattered light rather than fluorescence. This is because light due to fluorescence in pure liquids is always unpolarized if the exciting light source is unpolarized (see e.g. Sohncke 1897, p. 81-84, Zsigmondy 1925, p. 9). At a similar time the effect was also found in crystals, including calcite (Landsberg and Mandelstam 1928, Wood 1928, Cabannes 1929b) which was very well suited to such observations due to its transparency. Thus, Wood investigated in addition to quartz and various liquids, "a very clear natural rhomb measuring 4 x 5 x 2 inches" of Iceland spar. Similarly, Schaefer et al. (1930a) state that "In the largest crystal, a clear rhombohedron of Icelandic Doppelspat of 40 mm size, a few hours of exposure were sufficient". They also studied other materials, but they had to give up on some of these because their crystal samples were too small or too opaque. Physicists soon began combining the data on frequencies and polarization properties of the Raman radiation and of the residual rays of section 34.1 with quantum-theoretical models of molecular oscillations (e.g. Cabannes 1929a, Schaefer et al. 1930b, Kastler 1930, Hanle 1931, Menzies 1931). Stuart (1936) reviews this rapidly expanding field. For calcite and other crystals, their structural characteristics deduced from X-ray spectroscopy provided a basis for the theoretical work. The Raman effect has ever since been very useful in chemistry, especially in research on covalent chemical bonds. See Appendix 5.

40 Iceland spar mining after 1940; concluding remarks

40.1 The Helgustadir quarry; mining abroad, applications of Iceland spar

One more attempt at mining optical crystals in the Helgustadir quarry was organized in 1946-47 by the National Research Council of Iceland, cf. an account by P. Skúlason in his periodical Skjöldur, p. 18-20 of issue 3, 2002. S. Steinthórsson (pers. comm. 2001) also informs me that a small amount was recovered and that a technician in Reykjavik prepared the crystals for export. This effort was soon discontinued, perhaps in part because the responsible staff became occupied with monitoring the Hekla eruption which began in March 1947. According to official records, 27 kg of Iceland spar were exported in 1947. In a 1963 speech on the history of the research council, Á. Thorsteinsson stated that the crystals of 1947 had turned out to be too small for use in instruments. A final mining attempt in 1952 with the council's participation was quite unsuccessful (according to newspaper accounts in early 1953), although about 10 tons of crushed inferior calcite were produced for use in the building industry.

The Helgustadir quarry was declared a protected "natural monument" by the Ministry of Education and Culture, in an announcement published in the government's gazette on 1 Dec. 1975. Among other things this declaration forbids collection of crystals at the quarry or in its vicinity.

The Optical Society of America awarded a medal to Karl Lambrecht, as recorded in the Journal of that society vol. 66, p. 188, 1976. After having been for some years an employee of manufacturers of optical instruments, he set up in 1933 his own company to produce polarizing prisms and other such components. In order to remedy the shortage of Iceland spar which had for years hampered the optics industry, he travelled in the 1950s to Mexico, South Africa, India and other countries to locate new sources. His high-quality prisms made of material from these sources were well received, and the Lambrecht company is still thriving. However, complaints of inadequate supply of Iceland spar appeared occasionally in the literature until 1960, see Appendix 1A.

Mines of optical-quality calcite which have been opened up in previously inaccessible areas, now seem to satisfy the demand, and advertisements for large amounts of Iceland spar may be found on the Internet, from e.g. Brazil, Namibia, China, and Siberia. Nice rhombs and whole crystals of other habits may be purchased at fair prices from dealers and museums. Numerous companies are producing polarizing prisms, often of the Glan type (with either glue or an air gap between the wedges), Rochon- and Wollaston beam-splitting prisms, variable compensators (as in Fig. 29-10 bottom left), and other items from defect-free Iceland spar. Many of these presumably end up as essential components or accessories in polarimeters, ellipsometers and microscopes, while others are used on their own in research on light, atomic physics, solid-state physics and so on.

40.2 Concluding comments on the quarrying activities

In Iceland, three different categories of parties were involved in the recovery and export of Iceland spar crystals through the ages:

individuals who collected crystals at Helgustadir, without special arrangements

private operators, quarrying the site commercially on lease from the owners

the authorities

Naturally, most of the surviving documentation relates to the part played the authorities. They were not always well aware of conditions in Reydarfjördur, but they wished to proceed carefully with the exploitation of the deposit and sought geological advice. They were also not well informed about the fate of the Iceland spar recovered, i.e. where it went, what it was used for, or what it was worth. In Parliamentary debates in 1922 for instance, it was claimed that the material was in particular demand for military purposes. The role of the authorities was in some contrast to that of the private operators (especially C.D. Tulinius) who were familiar with both the local conditions and foreign markets, who invested in mining equipment, and took the initiative to make these glassy rocks into a valuable international commodity. Critical comments on Tulinius and his son were voiced from time to time, as can be seen for instance in Appendix 1A and sections on the quarrying activities above. Thus it would probably have been more advantageous in some respects to spread the quantity recovered in 1863-72 over a longer interval of time and then to continue the quarrying activities at an even pace into the 1920s. Some of these criticisms may probably be countered with evidence from files in the National Archive and elsewhere. It is difficult today to judge the late 19th century situation in Iceland, including the effects of primitive means for travel and communication, of national poverty, and of adverse climate, upon undertakings like the quarry operations. At any rate it is quite clear that the efforts of C.D. Tulinius and others in the exploitation of the Helgustadir calcite were of inestimable value to the natural sciences.

40.3 On optics and physics in schools

For most of the 20th century, optics represented a larger part of the physics curriculum in universities, and therefore a larger part of a physicist's knowledge base, than at present. In their first and second year, students of physics probably read optics books like those of Drude (1900a), Wood (1905a), Schuster and Nicholson (1923) and Houstoun (1927) where double refraction and polarized light took up 50-70 pages. In older works such as by Verdet (1869) and Preston (1895) these topics were given even more attention. It was also not uncommon for general physics texts used in universities, high schools and self-study to contain a good deal of material on polarization. Thus, 187 pages of the university physics book by Christie (1864-65, 685 p. in total) are devoted to optics, whereof 54 treat double refraction and polarized light. The first volume of A. Paulsen's (1893) book on physics "presented in an understandable way for the general public" contains a whole chapter on polarized light (see Fig. 3-2). The 1100 pages of text in Ganot-Maneuvrier's Traité Élémentaire de Physique (24th ed. 1908) include 105 pages on optics with 13 on polarized light. In Dahlander (1902) the numbers are respectively 892, 157 and 38. It is evident that much of the Iceland spar prisms and other polarization-related items listed in catalogs like that of B. Halle (about 1895, Fig. 32-2) has been intended for practical instructions in schools and universities, see also Grimsehl (1905) and Rosenberg (1924). In the optics textbook of G.R. Noakes (expanded edition, 1940) for the advanced level of British high schools, 18 out of 355 pages deal with polarized light.

In the last half-century, new fields have squeezed coverage of older optical knowledge out of physics curricula, and other subjects have also tended to crowd out physics in the overall timetable of education below university level. In new editions of U.S. textbooks like those taught in the first year of physical sciences and engineering at the University of Iceland, on average less than 5 pages out of every 1000 specifically describe polarized light; in some cases, the authors even remark that it is merely a supplementary topic. These changes may be inevitable, but students are missing valuable insights into the nature of light and other vibrations if they for instance do not have the opportunity themselves to carry out practical exercises on polarization. A related matter concerns the presentation of currently active fields of scientific research in textbooks. Thus it is evident from the preceding chapters that polarized light played a wide range of significant roles in the early development of modern physics (i.e. quantum theory, relativity, atomic physics, etc.); yet it is completely ignored in many textbooks on that subject (such as A. Beiser's popular Perspectives of Modern Physics, published in 1969). One reason for this omission may be the authors' belief that students who are going to read their books have no prior knowledge of polarized light.

40.4 Some inaccurate statements on Iceland spar

Various statements regarding Iceland spar and the Helgustadir site which have appeared in the literature through the years, are inaccurate. Some keep cropping up even in recent Icelandic newspaper accounts or information for tourists. A few examples will be paraphrased below, with explanations.

"Most of the large specimens of calcite in foreign museums are from Iceland": calcite crystals from locations abroad do exhibit much more varied forms than those in Iceland, and many of these are quite spectacular. Furthermore, large optical-quality crystals have been found since 1920 in various locations worldwide. Some guidebooks even asserted around 2000 (Fig. 40-2) that Icelandic museums displayed silver from Helgustadir, a misunderstanding clearly based on the name silfurberg for Iceland spar.

"Iceland spar was used in telescopes" (Fig. 40-2): this was generally not the case, and its uses as an accessory in telescopes were limited to specific astrophysical observations. They include photometry (mostly in 1870-1910, see references to Zöllner, Pickering and Lyot), ultraviolet spectroscopy (mostly 1870-1900, see e.g. references to Huggins and Cornu), magnetic field observations (after 1905, see references to Hale) and interference color-filters (see section 39.2, on Lyot and others). One possible application would be in the measurement of small angles (like between double stars) by means of beam-splitting prisms. However, I have only come across one astronomer who may have attempted to make a double-image micrometer with calcite wedges, namely O. Lohse in studies of the planets before 1890. Others such as Dollond (1821), Pearson (1822, 1829), Arago (1847), A. Secchi in C.R. 1855, V. Wellman in Astron. Nachr. 1889, and E.C. Pickering in the Harvard Annals 33(7) in 1900, used only quartz wedges. Other types of astronomical micrometers were much more common.

With respect to the above claim of the use of Iceland spar in telescopes, it is possible that some people have considered the right-angle prisms in ordinary binoculars to be made of calcite, but they are always made of glass. The only non-astronomical application of Iceland spar in common telescopes that I have come across, is an adaptation by Bénard (1920) of the Ahrens (1884) prism

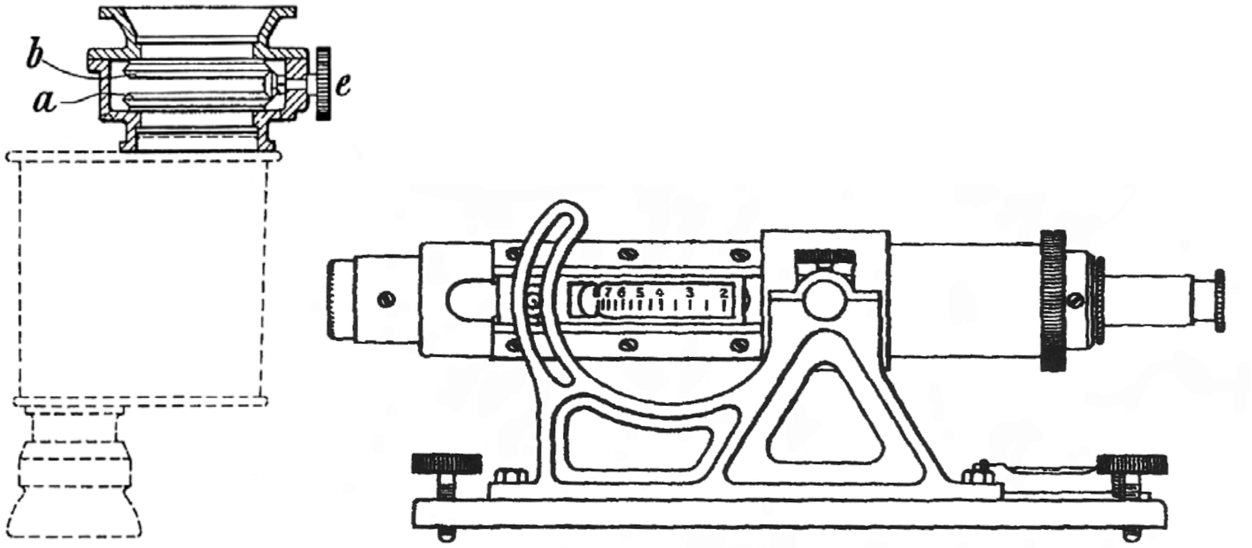

Figure 40-1. Simplified diagrams of two C. Zeiss telemeters, from patent documents. *Left:* A. König's invention according to a German patent no. 188992, 1906; the drawing is from U.S. patent no. 942393, granted 1909. The view is from above. With the knob e the observer moves the slim Rochon prisms a and b (from Iceland spar or quartz) laterally until two images coincide. *Right:* A drawing published in British patent no. 190922523, 1909 of a telescopic range finder containing a single Rochon prism.

for the purpose of reducing glare in binoculars for mariners. Some others entertaining this claim may have confused telescopes with petrographic microscopes.

"Iceland spar was used in (microscope) lenses" (Fig. 40-2): such applications were extremely rare, and mostly for ultraviolet light. I have found no instance describing its use in microscope lenses. See e.g. section 29.8 and references to Fedorow and Lowry.

"Iceland spar was in great demand for use in telemeters and other military equipment": this statement may be found e.g. in parliamentary debates in Iceland. Similar claims have also appeared abroad, even (in a news item on SW-Africa mentioned in section 37.3) that Iceland spar was used in the periscopes of submarines. The catalogs of Duboscq (1885) and Pellin (1899) include a small telescope with a quartz Rochon prism, to be used for estimating distances to objects of known size. This device (Fig. 13-7) may have been designed by Soleil (1855a). A more complex apparatus with a similar prism was tested by Giraud-Teulon (1875). Wulff (1897) discusses the possibility of measuring small angles with wedges of doubly refracting materials but he does not give any concrete examples. The firm of C. Zeiss obtained a German patent no. 188,992 in 1906, a U.S. one no. 942,393 in 1907 and a British one in 1910 for two different telemeters with Rochon prisms (Fig. 40-1); at least one of these employed calcite. I do not know whether they went into production. Despite considerable search efforts I have found only one piece of solid evidence for the use of birefringent telemetric devices prior to 1925 (e.g., in WW I). This is in a catalog where a manufacturer (Krauss 1922) offers an optional prism attachment (probably of quartz) to his wide range of binoculars. On the other hand it is clear that Iceland spar prisms were essential in the testing of raw optical glass and of glass objects for strains, regardless of whether they were intended for military or civilian purposes (Wright 1921).

"Iceland spar became obsolete in the early 20th century" (Fig. 40-2) and "Dichroic materials have completely replaced Iceland spar in optical equipment": such materials (i.e. the successors

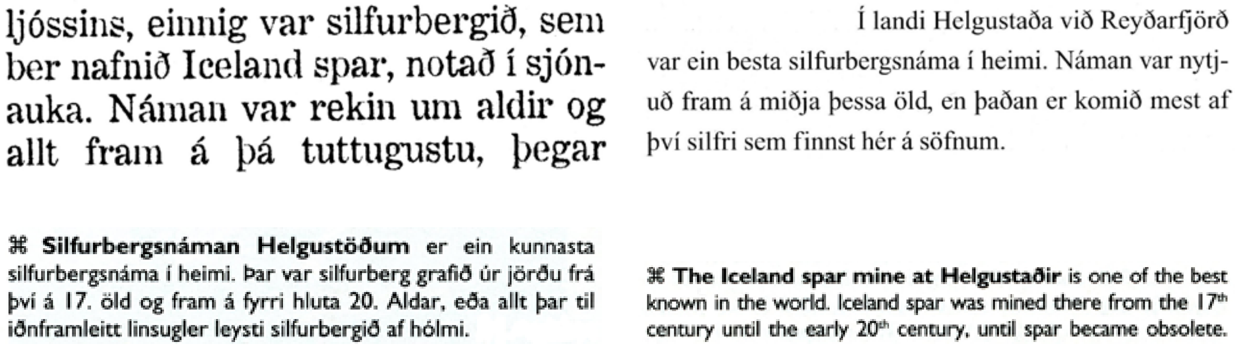

ljóssins, einnig var silfurbergið, sem ber nafnið Iceland spar, notað í sjónauka. Náman var rekin um aldir og allt fram á þá tuttugustu, þegar

Í landi Helgustaða við Reyðarfjörð var ein besta silfurbergsnáma í heimi. Náman var nytjuð fram á miðja þessa öld, en þaðan er komið mest af því silfri sem finnst hér á söfnum.

⌘ **Silfurbergsnáman Helgustöðum** er ein kunnasta silfurbergsnáma í heimi. Þar var silfurberg grafið úr jörðu frá því á 17. öld og fram á fyrri hluta 20. Aldar, eða allt þar til iðnframleitt linsugler leysti silfurbergið af hólmi.

⌘ **The Iceland spar mine at Helgustaðir** is one of the best known in the world. Iceland spar was mined there from the 17th century until the early 20th century, until spar became obsolete.

Figure 40-2. Inaccurate statements. *Top left:* A 2001 account on East Iceland in a national newspaper claims that Iceland spar was among other things used in telescopes. Also that the quarry was operated for centuries. *Right:* Booklets tell Icelandic travellers in 2002 (and earlier) that silverware in Icelandic museums mostly comes from Helgustaðir. *Bottom:* The text in an Icelandic version of a widely circulated 2015 guide book for tourists informs us that industrially produced glass replaced Iceland spar in lenses early in the 20th century. The English version merely states that the spar became obsolete at that time.

of Polaroid sheets, see section 35.2) have both advantages and disadvantages compared to Nicol prisms and other Iceland spar polarizers. In many instruments and experimental setups, for instance those using intense laser beams, Iceland spar prisms are still preferred although expensive. Advertisements and catalogs from many current manufacturers of these may be found on the Internet.

"The Iceland spar crystals at the Helgustadir site were damaged by the use of explosives": contemporary accounts show that gunpowder blasts to dislodge basalt blocks had started by 1870, and continued into the 1900's, cf. Fig. 32-1. Rumors of specific parties causing damage in this way were for instance afoot in 1910-11 (Thjódólfur newspaper, 7 Oct 1911, p. 146), although good crystals were recovered from the quarry up to its closure in 1924-25. Similar rumors have also persisted about activities after WW II (Thjódviljinn newspaper 19 May 1946 and 17 Jan 1971, etc.). King (1947) states that adverse effects of dynamite explosions on optical calcite in rock reach about 5 meters from the shot point. Bowles (1922) strongly advises against explosives in the quarrying of Iceland spar, even of marble. A quite different account of possible damage to the spar at Helgustadir may be found in a small book by H.N. Holmes: Strategic Materials and National Strength, published in New York in 1942. He reports (see also Hughes 1931) that during WW I the quarry had been flooded with water in order to minimize weathering of the crystals, this operation having even worse effects on them. Possibly, water which enters cracks in the crystals expands on freezing and thus makes the cracks wider (Turnbull 1912); many freeze-thaw episodes occur every year in Iceland.

"The largest Iceland spar crystal ever found came from Helgustadir": this claim possibly originates in a biographical essay on the skipper Brynjólfur Jónsson by Ásmundur Helgason, published in 1946. In the essay it is reported that Jónsson's boat carried a 600-pound crystal to Leith in 1870 in a cargo of other Iceland spar of both optical and inferior quality. This crystal found a permanent home in the British Museum and is presumably still on display there. On the Museum's home page it is said to be 60 cm in size and to have been acquired in 1876. It may have been the largest specimen recovered in one piece at Helgustadir, but there are reliable reports of much larger calcite crystals occurring both there (Des Cloizeaux 1846-47) and elsewhere (see e.g. section 39.4). In the 1990s, a 17-ton crystal was found in China (Zhaochang 1994).

Appendix 1A: Various statements regarding the Helgustadir quarry and the supply of Iceland spar, especially shortages. (Direct quotes are in italics. Note: some of the authors cited may not have had access to accurate or up-to-date information)

-1856 Frick, D *Da Doppelspath, der zu optischen Zwecken brauchbar ist, in der neueren Zeit selten und theuer wurde, ...*

-1857 Foucault, Fr… *le prisme de Nicol devient dispendieux et difficile à se procurer en raison de la rareté des beaux échantillons de spath.*

-1874 Des Cloizeaux, Fr. *La variété assez pure et assez transparente pour être employée à la fabrication des appareils de polarisation (spath d'Islande) n'a été trouvée jusqu'ici qu'en Islande.*

-1874 Ladd, U.K. *In ...1869 I constructed two Nicol's prisms of about 2.5" aperture* ….[but now the demand for prisms of this size has increased so much that] *very great difficulty is experienced in procuring pieces of spar of sufficient purity to give such a field.* He therefore made such prisms by combining smaller ones.

-1877 Laurent, Fr. similarly complains about having to glue together small pieces of Iceland spar in order to make sufficiently large Nicol prisms for his new projector.

-1878 v. Zahn, D. in footnote: *Wie schwer es ist Nicols von der erforderlichen Güte zu erlangen, weiss jeder, der sich mit der Zusammenstellung eines Polarisationsphotometers abgegeben hat.*

-1882 or later, reported by Merrill, U.S. (1905) ... *The chief commercial source of the mineral has for many years been Iceland... From [1872] until 1882 the mine remained idle, when operations were once more renewed, though not on an extensive scale, owing, presumably in part, to the fact that Tullinius, the last year he rented the mine, had taken out a sufficient quantity to satisfy all the needs of the market.* Merrill does not mention other locations.

-1882 Bréon, Fr… *Eskifjord, localité qui seule a fourni au monde civilisé cette précieuse substance pour les instruments d'optique.*

-1884 Bertrand, Fr. … *un morceau pur et assez gros de spath d'Islande, substance chère et qui devient de plus en plus rare.*

-1884 Feussner, D… *während die grossen, homogenen Kalkspathstücke, welche…. die Prismen sehr theuer machten…;*

-1885 Madan, U.K. …*Iceland spar, a material which is becoming deplorably scarce and expensive (I question if there is in England or elsewhere a piece of spar fit to make a Nicol´s prism of 5 cm. aperture).*

-1886 Stokes, U.K. … see letter in Appendix 1C below.

-1887 Labonne, Fr. … *la mine du spath d´Islande, substance dont la rareté préoccupé a juste titre les laboratoires de physique et de minéralogie… Le gîte est actuellement concédé à un negociant islandais, M. Carl Tulinius, qui se contente de vendre au jour le jour le spath abattu, sans poursuivre aucun travail d´exploitation régulière…*

-1887 Reichskanzleramt, D…. makes enquiries in Copenhagen, see Zeitschr. Deutsch. Geol. Gesellsch. 1888 which states that Iceland spar crystals occur "*nur vereinzelt*" and "*als mineralogische Seltenheiten*" elsewhere.

-1888 Deslandres, Fr. needed two Iceland spar prisms for an ultraviolet spectrograph and managed to procure them; however, ….*Le second prisme a été difficile à obtenir, à cause de la rareté actuelle des beaux morceaux de spath.*

-1889 Chauvin, Fr. *Malheureusement, les échantillons de cristaux épais et transparents, nécessaires pour ces expériences, sont très rares….*

-1889 Thompson, U.K. *...at present there is a spar famine...To avoid the excessive cost of large Nicols, I have lately got Mr. Ahrens to construct for me a large reflection polarizer.*

-1889 Haensch, D, in speech: *Der Doppelspath...ist in den letzten Jahren so hoch im Preise gestiegen, dass es gar nicht mehr lange dauern wird, bis wir den zehnfachen...Preis bezahlen müssen....die Hauptfundorte des Doppelspaths liegen bekanntlich in Island...Da inzwischen die Vorräthe in Doppelspath völlig erschöpft sind, so wird es in kurzer Zeit nicht mehr möglich sein, manche wissenschaftlichen Apparate und solche für industrielle Zwecke herstellen zu können.*

-1890 Hoskyns-Abrahall, U.K. speaks of difficulty in *obtaining large clear pieces*, and Madan (1890) mentions …*these spar-famine days*.

-1890 Grosse, D…*Leider ist der Preis des Kalkspathes ein sehr hoher und die Verluste bei der Anfertigung der Prismen so gross, das nur etwa 5% des Rohmaterials nutzbar sind, da von fünf gleich grossen Stücken nur etwa ein Stück brauchbar ist und von diesem bei Bearbeiten…wieder drei Viertel verloren geht.*

-1890-91 Tait (see Sang), U.K.*...in view of the scarcity of this precious substance. The great dearth of Iceland spar* is also mentioned by S.P. Thompson in an account of the annual meeting of the British Association (The Times, 27 Aug 1891).

-1893 Lacroix, Fr. …*Les physiciens d'alors* [around 1845], *et Biot en particulier, se préoccupaient déjà de la rareté du spath d'Islande, rareté qui n'a que s'accroître depuis.*

-1893 Knipe, U.S. describing a new projector, in Science 22:…*unfortunately it is now impossible to obtain such large crystals of spar* [i.e. for making Nicol prisms 2" across]

-1894 Tschermak, A, on Helgustadir…*Dies ist das einzige bisher bekannte Vorkommen von grossen, klaren Individuen und liefert demnach alles Material für optische Zwecke.*

-1894 Gumlich, D., on hopes that calcite deposits in Auerbach may yield crystals for making good-quality Nicol prisms: ...*damit dem immer fühlbarer werdenden Mangel an geeignetem Material, von dem grössere Stücke erster Qualität schon jetzt kaum mehr zu haben sind, durch Fundstellen in Deutschland selbst für die Zukunft abgeholfen werde.*

-1895 Wulff, D. *Der Substanz* [i.e. sodium nitrate], *im Fall der Kalkspatmangel anhält, wird viel gezüchtet werden müssen….*

-1897 Kirk, U.S., quoting N.V. Ussing and T.E. Tulinius: ...*this mine is the only one known to contain this particular kind of spar,... By 1895, the supply of spar was exhausted...*

-ca.1895-99, B. Halle catalog, D…*Rohe Krystalle, vornehmlich Isl. Doppelspath und Bergkrystall, zu optischen Zwecken brauchbar, werden stets gekauft oder in Tausch angenommen.*

-1896 Macnair, U.S. (in Nature 53) ... *the present scarcity of Iceland spar…*

-1896 Turner, U.K. [decided against acquiring a double-image prism to use in a solar-eclipse expedition to Japan, as] …*this would mean a great expense, at the present price of Iceland spar* (Monthly Not. Royal Astron. Soc. 57, p. 110).

-1897 Elster and Geitel, D…*die Beschaffung eines Nicol'sches Prismas von den nöthigen Dimensionen bei völliger Reinheit des Kalkspathes nicht möglich war,…*

-1897c, 1899 Leiss, D……*die Schwierigkeit der Beschaffung optisch brauchbaren Kalkspathes... hat sich in den letzten Jahren immer mehr und mehr gesteigert….Das zur Herstellung grosser und reiner Prismen erforderliche Material ist jetzt entweder schon gar nicht oder nur mit sehr bedeutendem Kostenaufwand zu erhalten….*, [and] …*Der sich mehr und mehr geltend machende Mangel an optisch brauchbarem Kalkspat...Nur für die Herstellung kleinerer analysierender Nicol'scher Prismen ist im allgemeinen noch genügend Material vorhanden.*

-1898 v. Lommel, D. on glass-calcite prisms:…*die Hälfte des immer kostbarer werdenden Kalkspathmaterials zu ersparen.*

-1901 Comment on Sokolow (1898) in N. Jahrb. Mineral., D.…*Bei dem Seltenwerden absolut* *wasserklaren und fehlerfreien Doppelspathes in Island verdient die Krymsche Lagerstätte eine eingehende Untersuchung....*

-1903 Becker, D. on polarizing prisms of the Feussner type:*...Der wesentliche Zweck dieser neuen Polarisatoren geht auf die Ersparnis an dem immer im Preise steigenden Kalkspat hinaus.* (He also states that nitrate polarizers may be used with advantage).

-1903 Brauns, D *….es ist noch nicht gelungen, den immer seltener und teurer werdenden klaren isländischen Doppelspat zu ersetzen…..Zum grossen Bedauern der Optiker entspricht die Produktion von klarem Doppelspat lange nicht dem Bedarf und der Preis geht stetig in der Höhe…*

-1903 Klockmann, D *...der Doppelspath von Island...der für Nicols Verwendung findet, wofür nur noch wenige andere Vorkommen z.B. das von Baidar-Thor in der Krim brauchbar sind...*

-1904 W. Voigt, D in a letter to H.A. Lorentz about testing predictions of a theory of the Kerr effect: *Auch hier liegen grosse experimentelle Schwierigkeiten vor, - schon bei der Beschaffung wirklich guter Nicols beginnen sie!*

-1905 Thompson, U.K.*…This last consideration has been forced upon designers by the increasing scarceness of the material since the closing of the mines in Iceland.*

-1905 Turner, U.K. (Proc. R. S. A77, 1906) made repeated but unsuccessful attempts to obtain a replacement for a faulty Iceland spar prism, to use in solar eclipse observations.

-1906 Firma Carl Zeiss, D., letter to the Minister for Iceland *…die für gewöhnlich im Handel vorkommenden Krystalle für optische Zwecke meistens nicht brauchbar sind.*

-1906-07 Cheshire, U.K.: *Iceland spar has never been obtained, I believe, of optical quality and of large size, except from a single mine in Iceland, and even this supply has now been exhausted for some years.*

-1907 Á. Torfason, an industrial chemist in Reykjavik, advertises in the local newspapers that he wishes to buy clear crack-free Iceland spar at a high price.

-1908 B. Halle, D, in a description of improved methods of making polarizing prisms: *…der Isländische Spat ist seit 30 Jahren um das 20-fache im Preise gestiegen.*

-1909 Lummer, D. … *Nicols grosser Apertur sind unerschwinglich.*

-1909 Stadthagen, D… *Leider findet sich dieses Material in optisch brauchbaren Stücken und in wesentlichen Mengen nur in Island…In Island gebe es zwei Fundstellen…*

-1910 G. Halle, D… *Bei den stetig zunehmenden Mangel an leidlich reinem Kalkspat, be-*

sonders grösserer Stücke…eine ungewöhnliche Preissteigerung [ist] *eingetreten.*

-1910 Badermann, D., is very critical of the Danish (sic) company which has been selling poorly sorted Iceland spar from its two (sic) quarries in Iceland to dealers: *Es wurde aber...nicht die geringste Rücksicht auf die Auswahl und Güte des gewonnenen Produktes genommen...So stellte sich nach und nach im Bezuge von Doppelspath ein immer grösserer Notstand heraus...* The optical workshops are at the mercy of these dealers who charge exorbitantly for the good-quality material. In the near future however, sodium nitrate may provide some competition.

-1910 Féry, Fr. remarking in Bull. Soc. Encouragement that the only available materials for achromatizing the quartz lenses in ultraviolet spectrographs are fluorite and Iceland spar:*...mais le prix de ces substances est prohibitif.*

-1911 Schulz, D… *ist bisher vorwiegend Kalkspat zu Polarisatoren benutzt worden; jedoch ist mit zunehmender Verwendung die Erlangung brauchbaren Materials so schwierig und damit der Preis ein so hoher geworden, dass Prismen von grösserer Öffnung fast unerschwinglich geworden sind.*

-1911 Busch and Jensen, D. on the Foucault type of Nicol prisms: *….Hierdurch kann, was natürlich bei der Seltenheit des isländischen Vorkommens sehr ins Gewicht fällt, das Prisma sehr verkürzt werden.*

-1911 Encycl. Britannica, U.K. *....in recent years much of the material taken out has not been of sufficient transparency for optical purposes, and this, together with the very limited supply, has caused a considerable rise in price. Only very occasionally has calcite from any locality other than Iceland been used for the construction of a Nicol´s prism.*

-1912 Coker and Thompson, U.K.*…at the present time, the number of large prisms in existence is very limited, and there is a complete dearth of spar of a suitable kind, owing to the stoppage of the supply from Iceland, and the lack of any other supply of sufficiently good optical quality.* Coker also laments the scarcity of good spar in 1914 and 1916.

-1913 Dammer and Tietze, D…. *Da die Feinmechanik fast ausschliesslich auf den isl. Kalkspat angewiesen ist und die Beschaffung dieses in ausreichender Menge und genügender Qualität oft mit Schwierigkeiten verknüpft ist….* [The quarrying in Iceland is said to have been at times “*wahrer Raubbau*”]*….bis in der achtziger Jahre konnte der Betrieb nur in sehr geringem Umfange geführt werden, da ein Unternehmer Anfang der siebziger Jahre so grosse Mengen auf den Markt geworfen hatte, dass der Bedarf lange Zeit hindurch zum grössten Teile aus diesen gedeckt werden konnte.*

-1913 Lowry, U.K… *But the increasing demand for the spar has not been accompanied by any corresponding increase in the supply, and large clear pieces of the mineral are becoming increasingly difficult to procure. It may indeed be doubted whether large polarising prisms such as those which have been handed down as heirlooms at the Royal Institution could now be purchased at any price, in view of the “spar-famine” which has prevailed for some years.*

-1914 Becher, D....*Die Preise für Nicols von mehr als 1 qcm Fläche werden schon recht hoch, und bei mehr als 2 cm Dicke werden sie bald unerschwinglich.*

-1915 Beckenkamp, D.… *Nun ist das zu grösseren Nicols brauchbare Material auf nur eine Fundstelle, oder sogar einen einzigen Kristallblock auf Island beschränkt, und zur Herstellung grosser Nicols werden schon lange die seit älterer Zeit in den Sammlungen befindlichen grossen Spaltungsstücke von Island verwendet; der Preis grosser Nicols ist daher sehr hoch, während man für kleine Nicols auch das Material anderer Fundorte verwenden kann.*

-1918 Parsons, U.S. …*Since the 17th century science requirements for optically perfect calcite have been supplied almost wholly from* [Helgustadir]…*In recent years, however, the difficulty in securing first class spar from the Iceland deposit has steadily increased, much of the material being taken out being useless for optical purposes.*

-1919 Wright, U.S. …*Wollaston prisms were not obtainable during the war*… P.G. Nutting also states in J. Opt. Soc. America 1, p. 83, 1917 that calcite for making Wollaston and Nicol prisms for use in Martens photometers is not available.

-1919 Schulz and Gleichen, D…*Bei dem hohen Preise und die Schwierigkeit der Beschaffung geeigneten Kalkspates….Mehr als je muss darauf geachtet werden, dass das kostbare Material mögligst sparsam verwendet wird.*

-1919 Nelson, U.K. *It is now no longer possible to add a large Nicol to one's box of microscopic apparatus, because of the greatly increased price of large pieces of calcite.* (In another paper in 1917 he calls Nicol prisms "*an expensive luxury*" for microscopists).

- 1920 Bénard, Fr. *La rareté du spath d'Islande chez les Alliés semble...avoir été la raison principale du non-aboutissement...de tant d'efforts concordants.....le spath est trop rare, les constructeurs qui en ont un petit stock feront bien de le réserver pour les applications strictement scientifiques...*

-1920 Lord Rayleigh jr., U.K., mentions that he only had half a calcite Wollaston prism for experiments, and could not procure another half.

-1921 T. Crook, U.K, an expert in mineral resources, states in his book on Economic Mineralogy that: …*large transparent and flawless pieces such as are required for making polarizing prisms* [have] *only been found in any quantity in Iceland*,…B.K. Johnson is not optimistic in his paper in J. Royal Microsc. Soc. in the same year: *Iceland spar is very scarce and is becoming more scarce.*

-1921 Halle, D., describes his methods….*zur Ersparnis des immer kostbarer werdenden Rohmaterials*…in the production of various types of Nicol prisms.

-1922 Goerz AG, D., in a patent document: *Röhrenpolarisationsapparate ... sind bisher stets mit Polarisationsprismen aus Kalkspat hergestellt worden. Die zunehmende Seltenheit dieses Materials macht es schwierig, den Markt ... zu versorgen.*

-1922 The Minister for Industries, Iceland, states in Parliament that there is great demand from many quarters for optical-quality spar.

-1922 Tutton, U.K. *Large crystals are now becoming rare and exceedingly valuable ...Such large prisms can now no longer be made, the original magnificent deposit of enormous clear rhombs of Iceland spar at Eskifjördhr having become exhausted ...There is, happily, plenty of smaller calc-spar constantly being discovered, so that Nicol prisms for all ordinary crystallographic apparatus and the polarising microscope are more or less readily procured...*

-1923 Glazebrook, U.K., on designers of Nicol prisms: *...have sought the ideal mean between a prism of greatest utility and one involving small waste of material, an almost equally important consideration owing to the small supply of large flawless crystals of Iceland spar.*

-1923 Coker, U.K. on photo-elastic research: *...but the scarcity of suitable spar is such that suitable large prisms constructed wholly of this rare material are rarely obtainable...*

-1924 Stöber, D. ... *Da die isländische Kalkspatgruben, die einzigen, welche für den zu optischen Zwecken brauchbaren Kalkspat in Frage kommen, schon seit längerer Zeit so gut wie erschöpft sind, so macht es sich in den optischen Werkstätten der Mangel an Kalkspat... immer mehr fühlbar.*

-1924 Beck, U.K. on polarizer prisms for microscopes: *...but due to the difficulty in obtaining large pieces of clear Iceland spar such prisms are generally small.*

-1924 Glaser, D, discussing Nicol-prism types for metallography...*ein Umstand, der bei der heutigen Knappheit an gutem Kalkspat stark ins Gewicht fällt.*

-1925 Bouasse, Fr.... *D'où l'importance historique et technique de ce cristal dont les gros échantillons se vendent au poids d'or.*

-1928 Schulz, D. in Wien-Harms ....*ein in jeder Beziehung brauchbarer Ersatz für das bis vor kurzem fast nur in Island in guter optischer Beschaffenheit geförderte Material bislang noch nicht gefunden ist.....*

-1928 Schönrock, D. *Eine Zeitlang* [around 1920?] *schien es allerdings, als wenn bald die nötige Menge an reinem Kalkspat-Material nicht mehr geliefert werden könnte.*

-1929 Attempts to purchase Iceland spar specimens from the Mineralogical Museum in Copenhagen continue, according to Garboe's 1961 book.

-1931 Coker and Filon, U.K. book ...*Of late years the supply of Iceland spar has not been kept up, and of consequence new Nicol prisms are almost impossible to obtain....*

-1931 Spencer and Jones, U.S.: *Natural crystals, however, having a cross-section ...greater* *than 2 by 2 inches are so rare as to be practically unobtainable.*

-1933 Smith, U.K. (at Hilger Ltd.) *It is becoming increasingly difficult, for example, to obtain crystals of calcite which will enable first quality Nicol's prisms to be made with a maximum aperture of 1 in. diameter.* In Smith's U.S. Patent it is also stated that…*pieces of Iceland spar are no longer obtainable, at no matter what price, in sizes large enough to cut prisms of more than 50 mm. effective aperture.*

-1933 Lyot, Fr. mentions in a 1941 paper that his ingenious monochromatic filter which needed 10 Nicol prisms (of Glazebrook-type, with 18-mm aperture) could not be constructed, *faute du spath nécessaire pour les tailler*. The filter was eventually made in 1938 with Polaroid sheets and in 1940 with Iceland spar.

-1935 Hardy, U.S. uses a specially designed calcite-glass Rochon prism instead of a Nicol prism in his new type of spectrophotometer, partly to economize on calcite.

-1936 Pollard, ?U.K. *Usually, Nicol's prisms are much smaller than this [i.e. 4" aperture] and even moderately sized optically perfect crystals of the spar have already become scarce.*

-1936 South African Geological Survey: *Iceland spar has, in the past, been obtained almost exclusively from Iceland but owing to the falling off of the production of good optical grade material from that country and the increasing demand for the mineral, attention has been directed to other possible sources of supply.*

-1938 Griggs, U.S. … *Iceland spar… difficult to obtain…*

-1940 Kremers, U.S. *Natural calcite of optical quality is scarce.....The acute shortage of calcite in the larger sizes has for several years stimulated the search for a proper substitute* [he mentions sodium nitrate specifically].

-1940 Bausch & Lomb, U.S. announcing a new mine in New Mexico:...*Meager supplies* [of fine crystals] *have come from various countries, the most recent from Spain and South Africa, but the total volume offered for sale has been insignificant for many years.*

-1941 Frocht, U.S. *However, large calcites, 1 in. or larger, are costly and rare.*

-1948 Archard and Taylor, U.S. … *more recently* [i.e. after 1936], *owing to the shortage of calcite,…*

- 1949 Evans, U.S. …*Unfortunately calcite is so difficult to obtain* [in large sizes] *that its general use in birefringent filters is probably impossible.*

-1950 Schumann and Piller, D… *Das Versiegen der natürlichen Vorkommen von optischem Kalkspat bildet seit langem eine beständige Sorge aller beteiligten Fachkreise….*, [and] *...Kalk-*

spatpolarisatoren, deren Beschaffung ständig schwieriger wird…

- c. 1950 Keeler, U.K. mentions in a paper in Optometry in Practice 4, 2003 that a new model of a polarized-light ophthalmoscope (made commercially since the mid-1930s) *used Polaroid filters due to a shortage of Nicol prisms, as a result of post-war difficulties in obtaining such material.*

-1950 Hartshorne and Stuart, U.K. ... *because large pieces of optical calcite are practically unobtainable nowadays, and...*

-1953 Rinne-Berek, 12th ed. D… *Da für optische Zwecke verwendbarer Kalkspat in den letzten Jahren immer seltener geworden ist…*

-1957 B. Halle Nachf., D. advertise in a Reykjavik newspaper that they wish to purchase Iceland spar for use in optical instruments, even small quantities.

-1960 C. Zeiss (in an application for German patent no. 1,243,509 involving a double-image prism) prefer a saltpeter-glass combination to an all-calcite prism, because *...man aus Kostengründen von der Verwendung von Kalkspat absehen...will.*

-1961 Zirkl, A … (summary of 1959 lecture) *Hinzu kommt, dass die Beschaffung von Kalkspat immer schwieriger und kostspieliger wird, weil die Vorkommen in Island praktisch erschöpft sind.*

-1967 Nester and Schroeder, U.S. *Naturally occurring calcite of great purity has gradually become more difficult to obtain as great use has been made of this material in relatively recent years.*

-1968 Ammann and Massey, U.S.…*large natural* [calcite] *crystals of good optical quality are becoming increasingly scarce.*

-1971 V.O. Nicolai, U.S. in an application for U.S. Patent no. 3,700,308: *The increasing demands for calcite and the limited supplies of good quality stock, have caused the price of such* [= polarizing] *prisms to soar.*

Appendix 1B: A selection of some advertisements and other positive information on supplies of Iceland spar. Direct quotes are in italics.

-1855 Griffin, U.K., advertisement: *Iceland spar, unpolished. A variety of specimens from half an inch to three inches in diameter...Mr. Griffin has just received from Iceland a large supply of this beautiful mineral of a quality well suited for optical purposes.*

-1857 Optikus Steeg, D. advertises in Annalen der Physik: *Nicol'sche Prismen in allen Grössen, doppelbrechende Prismen von Doppelspath, Doppelspath-Platten, Polariskope etc.* A similar advertisement from J.V. Albert appeared in 1859.

-1857 Lloyd's book, U.K. *…Iceland spar…is found in considerable masses, and in a state of great purity and transparency…*

-1858 White, U.S. employs an Iceland spar prism from the calcite locality at Rossie, N.Y. in microscope observations.

-1865 Plücker, D. (in Verh. Naturhist. Vereins in Bonn 22) selects *schönen Prismen* from *mehrere hundert Pfund Doppelspath* stocked by *Optiker Herr Steeg in Bad Homburg*.

-1866 Hessenberg, D. *….Die vielgesuchten Spaltungsstücke dieses edelsten und berühmtesten unter den Kalkspäthen haben seit langer Zeit zu Tausenden den Weg in die Werkstätten der Naturforschung gefunden…* and he obtained some samples from A. Purgold. In 1872 he notes that Fr. Scharff had acquired a fresh supply, and in 1874 he obtains Iceland spar from Steeg. In an 1867 paper, E. Reusch reports having purchased crystals from the well-known W. Steeg (who later prepared plates of calcite for the thermal conductivity studies by A. Tuchschmid 1883).

-1870 C.D. Ahrens, U.K. starts constructing large Nicol prisms, according to Cheshire 1906-07.

-1874 Baumgarten, D. obtained good samples from the gem dealer Henriques in Copenhagen.

-1874 Jardin, Fr.:*…mais l'Islande seule le produit assez limpide pour que les experiences* [i.e. optical experiments by physicists] *puissant être faites avec succès*. A similar expression is found in vol. II of Des Cloizeaux' Mineralogy in the same year, however also stating that one locality in New York State delivers *cristaux quelquefois aussi limpides que du spath d'Islande.*

-1876 Spottiswoode, U.K. is quoted in a news item in The Times on 24 August …*that he had fortunately had the first pick of two cargoes of Iceland spar…,* and that he among other things had a sphere of 5" diameter made. This may have occurred some years earlier.

-1878 Lutz, Fr. made an Iceland spar sphere of 46 mm diameter for a world exhibition in Paris, cf. a paper in J. Phys. Radium 6, 259-265, 1925.

-1878-79 Des Cloizeaux, Fr. obtains samples of Iceland spar from the Mineralogical Museum of Copenhagen University (according to the University's yearbook).

-1880 Glazebrook, U.K.… *Iceland spar, which could be obtained in large pieces with ease…*; in the same year W. Huggins has triangular prisms made at the workshop of A. Hilger in London. Hilger advertises in The Observatory 1880 that he possesses *A large stock of perfectly pure Iceland spar*, see also Fig. 25-1.

-1883 Report by Th. Thoroddsen in the National Archive: a small quantity was recovered at Helgustadir in 1882 and sold to the optician F. Schmidt in Berlin.

-1884 Feussner, D. mentions various types of Nicol prisms produced by Steeg & Reuter. In the following year they advertise these and calcite pieces in the 2nd edition of Groth's book on physical crystallography.

-1886 Danker, D. selects Iceland spar samples for his research from a *grösserer Anzahl von Spaltungsstücken.*

-1886-90 H. Struers, Dk, was selling the crystals recovered in the 1885 quarrying effort at Helgustadir, see e.g. Zeitschr. Deutsch. Geol. Gesellsch. 1888.

-1887 Pulfrich, D., uses Icelandic calcite from Steeg & Reuter.

-1890 Hoskyns-Abrahall, U.K. states that Thor E. Tulinius is selling calcite for his father, who charges high prices to make his moderate stock last for a considerable time.

-1891 Dufet, Fr. discussing why measurements of the refractive indices have yielded very uniform results: *...il me paraît d'ailleurs peu vraisemblable que l'indice varie d'un échantillon à l'autre, étant donné que tout le spath utilisé pour l'optique provient du même gisement.*

-1895, D. At a meeting of the German Geological Society (Zeitschr. Deutsch. Geol. Gesellsch. 47, p. 223) two Nicol prisms made of calcite from limestone quarries at Auerbach were exhibited. It is said to be found there "not too rarely" but in quality it is only comparable to second-class material from Iceland.

- Approx. 1895-99 The firm of B. Halle, D. offers a great selection of Iceland spar prisms and other objects (see Fig. 32-2). They also advertise these materials at the world exhibition in St. Louis 1904.

-1898 C.A. Niendorf, D., advertises in several issues of Deutsche Mechaniker-Zeitung that he sells Icelandic Doppelspath.

-1901 Hinrichsen, D. acquires *grössere Menge von isl. Doppelspat* (probably leftovers) from Schmidt & Haensch for his atomic-weight determinations.

-1901-02 The firm of A. Jobin, Fr., advertises in a Syndicat des Constructeurs catalog, a 60° prism of Iceland spar for astronomical work, with side length 60 mm and height 80 mm.

-1903 Pockels, D. obtains calcite prisms from Steeg & Reuter for measurements of pressure effects.

-1905 4th edition of Groth's crystallography, D.: advertisement from Steeg & Reuter offering all types of polarizing prisms; R. Fuess and W. Apel also advertise Nicol prisms.

-1909 Rose, U.S.?, on chemical analyses:*…Iceland spar is pure and easily obtained,….*

-1911 Some of the large stockpile of Iceland spar (of variable quality) kept by T.E. Tulinius is being sold off, partly through a French connection. See section 37.1.

-1921 Ingersoll, U.S. in a description of his glarimeter: *...the required optical parts – Wollaston double-image prism, nicol and lens – could be fairly readily obtained. A number of these glarimeters have been made up* [for use] *in various paper mills,…*

-1922 Tutton, U.K.: *There is, happily, plenty of smaller calc-spar constantly being discovered* [he does not state where], *so that Nicol prisms for all ordinary crystallographic apparatus and the polarising microscope are more or less readily procured….*Elsewhere in his book he states that the available material is *adequate for all but projection purposes*.

-1925 Schütz, D. and 1927 Kellström, Sweden, use calcite from Steeg & Reuter.

-1928 Schulz, D. in Wien-Harms: *Die amerikanischen Vorkommen bei Cedarville (Kalifornien) und Graycliff (Montana) liefern mit wenigen Ausnahmen nur minderwertige…Kristalle. Weitere wenigstens bedingt brauchbaren Doppelspat ergebende Fundstellen sind bekannt geworden in Südafrika, in Brasilien, sowie neuerdings im Gebiet der russischen Sowjetrepubliken.*

-1936 A catalog of educational laboratory apparatus in physics from H. Struers Chemiske Laboratorium, Dk, offers Nicol prisms and calcite of various sizes on special order.

-1937 Hughes, U.S.…*Recent demand for Iceland spar has been supplied principally from South Africa* (cf. Eiriksson 1943, who also mentions e.g. Spain and Siberia).

-1947 King, U.S. records that surplus stocks of Iceland spar recovered for the intended production of optical ring sights became available to users after WW II, see section 39.4.

-1949 Dan E. Mayers in New York advertises in the journal Acta Crystallographica (vol. 2, p. 260) crystals of optical calcite, quartz and other substances for optical research.

-1950 K. Lambrecht, U.S., offers a variety of Nicol prisms in the Science journal, and later begins working new Iceland spar mines, see section 40.1. In a paper by W. Shurcliff on the polarization of light in Am. J. Physics 1962, readers are informed that Lambrecht's firm in Chicago sells many types of calcite polarizers.

-1978 Bennett and Bennett, U.S.: *There is much more calcite wastage in making Glan-type prisms than in making the simpler Nicol types, so that, ...it was only following the recent discoveries of new calcite deposits that they became popular.* (According to Bennett and Bennett these mines are in Mexico, Africa and Siberia).

Appendix 1C: A letter from G.G. Stokes

Lensfield Cottage, Cambridge, 6 July, 1886.

To his Excellency, the Minister for Iceland, Copenhagen.

Sir,

As I hold the office of president of the Royal Society of London, the oldest scientific society in this Kingdom, I hope your Excellency will excuse me for troubling you on a matter of scientific importance, possibly also of some slight commercial interest to your country.

This mineral known as calcite is much used by scientific men for instruments employed in investigations and lectures relating to polarised light. This mineral is common enough: but it has nowhere, to my knowledge, been found in large, clear, regularly crystallized masses except in Iceland, from which circumstance it is otherwise called Iceland spar. It is from Iceland that the supply of this material used by opticians has been exclusively derived.

Some years ago large blocks of this material used to be imported into this country from Iceland, and were freely purchased, and used by opticians. But for some time the supply has altogether ceased: the stock in hand has been used up, and opticians try in vain to get more. I feared that the mines were exhausted, but I am informed that the cause of the cessation of the supply is that the mines were purchased by Government and have not since been worked.

I imagine that they have been worked in a rather wasteful way, for the sake of quick returns, and probably at the time of the purchase there was a glut in the market: for though there is a steady demand for the material it is not used in large quantities, and the consumption is slow. But I hear on all sides from opticians and scientific men of the impossibility of procuring the material now, so there can be no doubt that there would be a demand for it if it could be supplied.

The magnificence of the blocks I used to see some years ago leads me to suspect that among the heaps of rubbish about the mine there may be many small pieces which were not thought worth collecting, nor were they perhaps when the market was glutted. But when I mention that a piece an inch or an inch and a half long and say three eighths of an inch in diameter would suffice to make a prism which when made could be sold for perhaps 8 shillings, even when there was still spar to be had in the market, it will be seen that even small pieces, comparatively speaking, have their value: and the collection of these, if such there be lying about, might help to defray the cost of re-opening the mine.

I enclose a translation of this letter into Icelandic, which my friend Mr. Magnússon has kindly undertaken to make.

I have the honour of being your Excellency's obedient servant

G.G. Stokes (sign.)

Appendix 2: Chemical analyses of Iceland spar from Iceland and elsewhere

Note: I have not obtained copies of all existing analyses. For instance, M.H. Klaproth and J. Proust may have analysed Iceland spar before or around 1800.

Phillips (1803) Pure doubly refracting spar: carbonic acid 44%, Lime 55.475%, water and loss 0.525%.

Fourcroy and Vauquelin (1804) Iceland spar from Iceland. No data given on impurities. Weight loss in acid was 43-44% (the correct value is 44 for CO_2).

Bucholz (1805) Transparent Doppelspath from Iceland: calcium oxide 56.5%, carbon dioxide 43.0%, water 0.5%. Hintze (1930, p. 2896) quotes 56 and 44% from 1804.

Thenard and Biot (1807) Chaux carbonatée rhombohedral: water 0.63%. They do not state the where the sample came from but Malus (1811, p. 306) and Des Cloizeaux (1874, p. 113) indicate that it was spath d'Islande.

Stromeyer (1814) Iceland spar from Iceland: manganese oxide and a trace of iron, total 0.15%. Andreasberg in Germany: 0.36% of the same, and 0.10% water.

Dumas (1842) Icelandic Iceland spar: silica 0.013%, iron oxide 0.017%, traces of manganese and magnesium. Calcium carbonate 99.97%.

Erdmann and Marchand (1842, 1844) Iceland spar (very pure pieces): silica 0.014%, magnesium oxide 0.005%, iron oxide 0.020%, trace of potassium or sulfur. Calcium carbonate 99.96%. In the 1844 paper it is not clearly stated whether the material is from Iceland, but one sample yields 0.001% silica, and a total of 0.035% of aluminium-, iron- and manganese oxides. Another sample contained 0.049% of the same impurities.

J. Hessert (Liebig's Ann. Chemie 176, 1875) finds 0.13% MgO in a sample of calcite from Iceland.

Stas (1892) Spath d'Islande contains silica (one part in seven or eight thousand) and a trace of lithium.

Thiele and Richter (1900) Careful analysis of a sample of Doppelspat from Iceland yielded impurities of (unspecified) metallic compounds totalling 0.025%.

Hinrichsen (1901, 1902) Four measurements on pieces from Icelandic material: average 0.046% iron carbonate (or 0.032% hematite). A sample from Crimea gave similar results but it also might contain a little magnesium.

E. Marbach (doctoral dissertation in Leipzig 1913, referred to by Hintze 1930) One Icelandic sample contained only small traces of MgO. A sample from Cumberland in North England gave 0.13% MgO.

J.C. Hostetter (J. Ind. Eng. Chemistry 6, 1914) Measures MgO in many commercial preparations of calcium compounds, and finds it to be 0.047% in Iceland spar.

G.K. Almström (J. Prakt. Chemie 99, 1919) Uses a sample of clear Icelandic calcite to test a method of measuring water and carbon dioxide in minerals. Obtains 0.26% H_2O and 43.83% CO_2 (which should be 43.94% in pure carbonate).

G.E. Ewe (Chemical News 121, 1920) Standard calcite (provenance not stated): SiO_2 0.0121%, $Fe_2O_3 + Al_2O_3$ 0.0134%, MgO and Mn not detected.

F. Hastings Smyth and L.H. Adams (J. Am. Chem. Soc. 45, 1923): In their research on thermodynamic properties of the system $CaO\text{-}CO_2$ they use “natural Iceland spar“ which is “found by analysis to be free from iron and manganese and contain less than 0.05% of MgO”.

Foote and Bradley (1926) A sample of “transparent cleavage crystals of Iceland spar“ from an undisclosed location, contained a small amount of iron carbonate corresponding to 0.04% of hematite. In Proc. Nat. Acad. Sci. 16, p. 214, F. Zwicky says: “It is known…that Iceland spar of the purest kind contains only 0.03% Fe_2O_3 and no other chemically measurable contaminations“, possibly referring to this determination.

Willard and Boldyreff (1930) purchase 99.95% pure Iceland spar from the major chemicals supplier Kahlbaum.

Bearden (1931b) Two Icelandic samples: iron oxide 0.007% and 0.006%, manganese oxide 0.008% and 0.007%. Silica, aluminium- and magnesium oxides were not detected, calcium carbonate 99.98%. Similar compositions were found in samples from Montana, Spain and Argentina.

Ievins and Straumanis (1940) analyse two Icelandic samples. Iron carbonate 0.005% in both, manganese carbonate 0.032% and 0.011%, zinc carbonate 0.001% in both, traces of magnesium- and barium karbonate, strontium carbonate 0.01-0.05%, calcium carbonate 99.92 and 99.95%. A sample from Cumberland had less impurities, while others from Norway, Caucasus, Graz and Andreasberg had more. In a table in Zeitschr. Phys. 125, 1948 p. 179 the average content of calcium carbonate in an undisclosed number of samples determined by Straumanis is 99.95 of a total of 99.977%.

Bearden (1965), one Icelandic sample: manganese 0.006%, strontium 0.02%, other elements each less than 0.0005%. Six selected samples of unknown origin plus one from Mexico and one from South America gave similar amounts of impurities.

D. Habermann (Mineralogy & Petrology 76, 2002) measures the Mn content of a sample from Helgustadir to be 0.02%, and Fe 0.025%.

For comparison it may be mentioned that Hintze (1930, p. 2956-) lists analyses of calcite samples from many worldwide locations, containing up to 5% or even more of other compounds.

Appendix 3: A list of some published photographs and other illustrations from the Helgustadir quarry, to 1960.

An Atlas of detailed illustrations accompanying the report by P. Gaimard's 1836 expedition contains a drawing of the Helgustadir calcite outcrop and the brook running through it. This drawing was also published in vol. 2 of the collected works of Jónas Hallgrímsson 1989, and by Kristjansson (2003).

In display cases at the Mineralogical Museum in Copenhagen, there was (in the late 1990's at least) a drawing of the Helgustadir outcrop, possibly dating from Fr. Johnstrup's visit in 1871. It may not have been published.

A. Helland: A drawing from his 1881 trip accompanied his paper on the geology of Iceland, published in Archiv Math. Naturv. 9, 1884.

Th. Thoroddsen: A drawing of Iceland spar veins made in 1882 appeared in his papers in 1890 and was copied e.g. by Merrill (1905) and Dammer and Tietze (1913). The originals of three drawings are enclosed with Thoroddsen's report dated 8 Nov 1882 in the National Archive.

H. Labonne: A photograph of two marines sitting in the quarry in 1887 was published in the book "Islande en Vue" by Æsa Sigurjónsdóttir, Reykjavik 2000. A part of it was also included in Kristjansson (2003).

F.W.W. Howell: A drawing of the mine and its immediate surroundings is reproduced on p. 50 of his book "Icelandic Drawings with Pen and Pencil" published in 1893. Howell travelled here in 1890-91 but the drawing may have been made by someone else.

C. Küchler: In his book "Wüstenritte und Vulkanbesteigungen auf Island" published in 1909, there is a photo of three miners. It also appeared in vol. 2 of the historical account "Eskja" by E.B. Sigurdsson, published at Eskifjördur in 1983, and by Kristjansson (2003). Küchler may have obtained it from earlier travellers such as D. Bruun.

F.B. Turnbull shows a photo from the quarry and another of an irregular block of spar in his 1912 paper in Trans. Edinb. Field Nat. and Microsc. Soc.

H.H. Eiriksson: Drawings in his paper in Transact. Inst. Mining Eng. 1920, one reproduced in this report and by Kristjansson (2003); he also publishes drawings and three photographs in J. Soc. Eng. Iceland 1922. Better drawings in scale 1:500 dated 1921 are in the National Archive (Government Documents II, Journal 6 no. 385).

E. Consemüller: A photograph probably taken in July of 1924 is in vol. 2 of Kuhn and Prinz (2003), p. 140. It is reproduced in the 2005 yearbook of the Iceland Touring Association by H. Guttormsson, along with Labonne's photo and a photo of the entrance of the 1921 tunnel.

J.V. Kaspar's group, 1938 and 1947: Several photos appear in his 1940 report and are reproduced in its 1960 version.

S. Einarsson: In his geographical account of the southern part of the eastern fjords of Iceland in the 1955 yearbook of the Iceland Touring Association, there is an undated photo by T. Jósepsson of a man standing at the end of the 1921 tunnel. Another undated photo by Jósepsson is in the Sunday supplement of the Tíminn newspaper, 25 Oct. 1964.

Appendix 4: Some relations between individuals named in this account

The present account mentions research by a very large number of scientists. The names of some may be familiar to say petrologists or physicists, while most of the readers have not heard of them before. One may ask: what connections were there between these scientists ? How was knowledge about Iceland spar, its properties, its use in instruments and so on disseminated ?

One particular example concerns the upsurge of interest in physical optics in France around 1807, which led to enormous progress in the field. How did it begin ? At least a partial answer to this question seems to be that the French read in scientific journals of research by W. Herschel, T. Young, W. H. Wollaston and others in England around 1800. Publications by R. Hauy may also have promoted the subject. In turn, how did Young and the others in England become interested in optics ? In Young's case it is evident from his writings that he was familiar with the work of older generations of scientists like C. Huygens and B. Martin. The reasons for Wollaston's entry into the field are less clear. Thus, Kipnis (1991, p. 73) says of him: "He had no particular interest in physical optics and came to the study of double refraction by a chance…" soon after he had invented his instrument (Wollaston 1802a) for measuring refractive indices and "came across Iceland spar". In contrast, Cheshire (1923) states that Wollaston's device was designed for the specific purpose of measuring Iceland spar. No doubt there are many similar examples where historical causes and effects might be investigated.

Another intriguing problem concerns the means by which Iceland spar found its way to various mineral dealers, museums, commercial instrument makers, and individual scientists in Europe. It would also be interesting to know whether the production of polarizing instruments was a major factor in the business of these instrument makers.

Below I list some pieces of about connections between some scientists, and connections of some of them to Iceland, that I have come across. This information is somewhat haphazard and probably not always of significance, but it is recorded here to give a glimpse of the intricate network of relations which may have aided the spread of knowledge about Iceland spar and polarized light.

F. Arago who was one of France's most notable scientists, was acquainted with T. Young and visited him in 1816 after the Napoleonic wars. Arago was also a friend of A. v. Humboldt who lived in Paris most of the time between 1804 and 1827 (for a while in the same house as Arago, in the same street as E. Malus). Along with J.B. Biot, the chemist L.J.Thenard and others they were members of a small but distinguished society of scientists, Société d'Arcueil. It is named after a small village where the astronomer and mathematician P.S. de Laplace and the chemist C.L. Berthollet were neighbors.

G. Rose studied mineralogy with C.S. Weiss who introduced Hauy's crystallography to German scientists. E. Mitscherlich who had studied chemistry with F. Stromeyer (who had written on the composition of Iceland spar) was instructed in crystallography by Rose in 1818, leading to Mitscherlich's work on isomorphism. Mitscherlich also was in contact with A. Fresnel and other French and British pioneers. Another student of Weiss was F.E. Neumann who around 1825 made important contributions to geometrical crystallography and later wrote major papers on optics (especially polarized light) and elasticity. H.W. Dove in Berlin whose publications mostly deal with meteorology (including an 1840 paper on data collected by a physician in Iceland) was also very active in crystallography and optics which he may have learned from Neumann at Königsberg in 1828-29.

v. Humboldt began his expedition to Siberia in 1829, accompanied by C.G. Ehrenberg and the above G. Rose. Some 15 years later, Ehrenberg published results on microscopic animals in Icelandic soil samples, collected by F.A.L. Thienemann (who had visited the Helgustadir quarry in 1820-21). Ehrenberg also studied tephra from the 1845 Hekla eruption which he had obtained through F. Magnusson (an Icelandic archivist) and J.G. Forchhammer in Copenhagen as well as from R. Bunsen. Rose was the first to describe the zeolite epistilbite (in 1826, probably Icelandic specimens) and much later wrote a paper on Iceland spar (Rose 1868). P. Groth who published well-known books on crystallography, was Rose's student.

H.C. Örsted, famous for discovering the magnetic effects of electrical currents in 1820, probably did not himself write anything on Iceland spar. As noted in chapter 14 however, he helped other scientists to obtain crystals from Iceland in at least a few instances. Some correspondence between Örsted and Icelanders is preserved in Danish archives (according to a list compiled by S. Kristjánsson, accessible at the National Library of Iceland) but I have not looked further into that matter. The geologist and chemist J.G. Forchhammer who was in charge of the mineralogical collection of the University of Copenhagen, may also have been an intermediary in the procurement of Iceland spar samples. He wrote papers on the geology and mineralogy of Iceland, but I have not found references to Iceland spar in his published correspondence.

T.J. Seebeck had started investigations in optics when the publications of E.L. Malus directed his interests towards polarized light around 1810, see section 7.3. He wrote papers e.g. on the effects of pressure on the optical properties of glass, but he is best known for his discovery of thermoelectricity (the Seebeck effect), later used by M. Melloni in research on infra-red radiation. His son, A. Seebeck, studied the reflection of light from Iceland spar but then turned to other fields of science.

As noted above, the Scotsman D. Brewster obtained in at least one case several samples of Iceland spar from his compatriot G.S. Mackenzie who had travelled in Iceland in 1810. They were without doubt acquainted, as Mackenzie wrote papers on various topics in the journals published by Brewster. According to Brewster's papers and a letter to H.C. Örsted, he also obtained mineral specimens from the banker T. Allan and his son R. Allan in Edinburgh. The Austrian W. Haidinger catalogued T. Allan's large mineral collection around 1825, and the Dictionary of Scientific Biography states that Haidinger's interest in mineralogy was due to his contacts with Brewster. F. Zirkel stayed for a year with Haidinger in Vienna around 1862 (according to a 1912 obituary of Zirkel), when working on his pioneering petrographic study on thin sections of rocks from Iceland and elsewhere. Among younger scientists in Vienna probably also influenced by Haidinger, were J. Grailich, V. v. Lang and G. Tschermak.

Irish scientists carried out valuable research in optics, electromagnetism and related fields in much of the 19th century. Some of them, like G.G. Stokes and W. Thomson (Lord Kelvin), moved to England or Scotland at a young age or worked there for a long while. From the names in the present list of references we may mention J.H. Jellett, J. MacCullagh, H. Lloyd, W.R. Hamilton and J. Tyndall, with later arrivals on the scene including G.F. FitzGerald, W.N. Hartley, T. Preston and J. Larmor.

J.D. Forbes who investigated thermal radiation, P. Kelland and W. Nicol were on the Edinburgh University teaching staff while J.C. Maxwell was a student there, and Maxwell also got acquainted with G.G. Stokes during his studies in Cambridge. Nicol made a large number of Nicol prisms over a period of at least 20 years (see Swan 1849), and the instrument-makers Bryson in Edinburgh whom he knew well, also made Iceland spar prisms for J.H. Jellett and others. A. Bryson visited Iceland in 1862. E. Sang was Nicol's nephew.

Among the teachers of L. Pasteur were the famous chemist J.B. Dumas, who used Iceland spar in his analytical work, and G. Delafosse who had studied with Hauy. Pasteur's interest in polarized light and optical activity may have been stimulated by his reading papers published around 1844 by E. Mitscherlich and J.B. Biot. Biot who had a high standing in French science, was just at that time arranging for the young mineralogist A. Des Cloizeaux to be sent to Iceland in 1845 to inspect the Helgustadir quarry. Des Cloizeaux also visited Iceland in the following year with R. Bunsen and others. H. Rosenbusch who was Bunsen's student, often mentions Icelandic rocks in his writings. R. Fuess who established an optics workshop in 1865, entered into the field of polarized light by producing microscopes for P. Groth around 1870, later for Rosenbusch. He became one of the major suppliers of petrographic microscopes and related optical equipment. C. Leiss who was for a long time a prominent employee of Fuess, set up his own business in 1921.

J.B. Soleil who became one of the main producers of optical instruments in France, inherited a workshop from his father; from around 1820 they manufactured large lenses for lighthouses (invented by A. Fresnel). The younger Soleil who made equipment designed by Fresnel, F. Arago, J. Babinet, L. Foucault, F. Rudberg in Sweden, J. Nörrenberg in Germany and others, published papers on his instruments in scientific journals to around 1849. In that year the workshop was divided, part of it being run until 1883 by J.B. Soleil's son-in-law J. Duboscq, in 1883-86 jointly with Ph. Pellin. F. Pellin joined his father in running the firm in 1900 or later. The other part of the Soleil firm was directed by H. Soleil to 1872 and later by Duboscq's son-in-law L. Laurent, then by A. Jobin from 1892 and later by G. Yvon. Both workshops were very well known among scientists (see Brenni 1996), gaining their reputation in particular from polarimeters and other polarized-light equipment. One of the customers of the Soleil firms was H. de Senarmont, originally an engineer. His interest in optics was awakened by Fresnel's work, and he himself contributed various discoveries and inventions to the field.

Four generations of physicists named Becquerel wrote much about optics, including polarized light and crystal optics. The first was A.C. Becquerel, then E. Becquerel (whose brother A. Becquerel also used polarimeters in research on e.g. blood and foodstuffs, see Vernois and Becquerel 1853), H. Becquerel (whose first wife was J. Jamin's daughter) and J. Becquerel.

Among the students of F.E. Neumann who was mentioned above, were G. Kirchhoff, W. Voigt and L. Sohncke who made important contributions to crystallography and optics. His son C. Neumann who became one of Germany's better-known mathematicians, also wrote some papers on these subjects. Voigt's students included P. Drude, F. Pockels, R.A. Houstoun from the U.K. and P.G. Nutting from the U.S. Another of the many Americans doing their graduate studies in Germany, was D.B. Brace who studied optics with Kirchhoff and H. v. Helmholtz; some of Brace's students in turn continued his notable research into optical activity, such as F.J. Bates, A.Q. Tool and C.A. Skinner. One more German-educated American was F.E. Wright who studied with H. Rosenbusch and V. Goldschmidt; he travelled in Iceland in 1909.

Appendix 5: On connections between Iceland spar and Nobel prizes, 1901-30 and later

Nobel prizes have been awarded more or less annually from 1901. In science, the prizes are given to living individuals in three categories: Physics, Chemistry, and Physiology or Medicine. In the original statutes of the Nobel Foundation, these individuals were intended to be chosen from "those who, during the preceding year, shall have conferred the greatest benefit on mankind". However, the Swedish prize-awarding bodies have often based their selection on discoveries that were made decades before, or on the cumulative impact of research carried out over a long period.

The main role of Iceland spar (optical calcite) in the context of Nobel prizes was in polarimetry, i.e. observations of polarized light and its interaction with matter. Nicol prisms made from spar crystals were an essential component in instrumentation for this purpose. Only a very small quantity of Iceland spar crystals for scientific use has been recovered from the quarry at Helgustaðir after 1924. This compilation therefore deals mostly with Nobel prizes awarded up to the mid-1930s, although some later prizes are also mentioned. It is divided roughly into six categories.

1. Discoveries which depended much on the laureate's use of Nicol prisms:

-Emil Fischer, Chem. 1902 (synthesis of sugars and other organic compounds)

-Alfred Werner, Chem. 1913 (coordination bonds; see Kauffman 1968)

2. Discoveries where polarization of light played a considerable part:

-H.A. Lorentz and P. Zeeman, Phys. 1902 (Zeeman magneto-optical effect)

-J. Stark, Phys. 1919 (Stark electro-optical effect on spectral lines)

-C.V. Raman, Phys. 1930 (scattering of light, with change of wavelength)

-H. v. Euler, Chem. 1929 (fermentation and the nature of enzymes)

3. Discoveries where Nicol prisms or calcite crystals played some part:

-W. Ostwald, Chem. 1909, used polarimeters in some of his studies on chemical processes cited by the Nobel committee.

-O. Wallach, Chem. 1910, was awarded the prize for his work on terpene and camphor compounds from plants, including optical activity measurements.

-R. Willstätter, Chem. 1915, notes in his work on flower pigments (e.g., Willstätter 1915) that some of these exhibit high optical activity and rotatory dispersion. He also used polarimeters and other instruments with Nicol prisms in his research on cellulose, alkaloids, hydrolysis, and enzymes.

-The X-ray diffraction studies of W.H. and W.L. Bragg, Phys. 1915, M. Siegbahn, Phys. 1924, and A.H. Compton, Phys. 1927 employed calcite crystals for accurate wavelength measurements.

-The research of R.A. Zsigmondy, Chem. 1925, on colloids which included observations of light scattering and polarization, was preceded by his studies on colored glasses (see Zsigmondy 1901, Siedentopf and Zsigmondy 1903, Bachmann 1915). Zsigmondy's investigations in turn inspired investigations by J.B. Perrin, Phys. 1926, on the atomic structure of matter.

-A. Windaus and H. Wieland, Chem. 1928, both measured optical activity in sterol compounds.

-H. Fischer, Chem. 1930, employed polarimeters in some of his work on bile acids, haemin and chlorophyll (including specially constructed equipment to measure strongly colored solutions).

-W.N. Haworth, Chem. 1937 elucidated the structural constitution of many saccharides and other carbohydrates using polarimetry. His group was the first to synthesize the optically active compound ascorbic acid (Vitamin C).

4. Nobel laureates who published papers on work involving polarized light or calcite, but received their prizes for discoveries in different fields:

-J.H. van't Hoff, Chem. 1901 (and independently J.A. le Bel), put organic chemistry on a new foundation by their many papers (e.g. Hoff 1874) arguing that optical activity of asymmetric carbon-containing molecules is due to three-dimensional bonds.

-W.C. Röntgen, Phys. 1901 investigated the Kerr and Pockels electro-optical effects, as well as sugar inversion and the Faraday magneto-optical effect in gases.

-S. Arrhenius, Chem. 1903 studied kinetics of chemical reactions, partly using optical activity data obtained by himself and others.

-H. Becquerel, Phys. 1903 did valuable research on the Faraday and Zeeman magneto-optical effects.

-Rayleigh, Phys. 1904 wrote a number of papers on theoretical and experimental aspects of polarized light, especially scattering of light by small particles.

-J.J. Thomson, Phys. 1906 wrote theoretical papers on polarized radiation.

-A.A. Michelson, Phys. 1907 included some observations of polarization in his research on the Zeeman effect.

-E. Buchner, Chem. 1907, published studies on mirror-image molecules.

-F. Braun, Phys. 1909, made valuable observations on double refraction in inhomogeneous materials.

-W. Ostwald, Chem. 1909 as mentioned above, used the interference of polarized light in his later influential studies on color perception.

-A. Gullstrand, Physiol./Medicine 1911, described some ophthalmological procedures where Nicol prisms played a part.

-J. Stark, Phys. 1919 as mentioned above, also studied for instance soot (in his dissertation), canal rays and photographic materials with polarizing instruments.

-W. Nernst, Chem. 1920, published a well-known paper with P. Drude on the polarization of standing light waves, and also papers where a Wanner pyrometer with Nicol prisms was employed in high-temperature research.

- A. Einstein received his Physics 1921 prize for theoretical work on the photoelectric effect as a quantum-mechanical phenomenon. Many results on polarized light by various experimentalists led up to his discoveries on this matter and others, while subsequent experiments confirmed or extended Einstein's conclusions. See a separate account on www.raunvis.hi.is/~leo.

-N. Bohr, Phys. 1922, J. Franck and G. Hertz, Phys. 1925, W. Heisenberg, Phys. 1932, and E. Fermi, Phys. 1938 wrote on polarized fluorescence, resonance radiation and related topics.

-F.W. Aston, Chem. 1922, began his career by investigating optically active organic compounds with P.F. Frankland.

-O. Meyerhof, Physiol./Medicine 1922, wrote papers on fermentation.

-R.A. Millikan, Phys. 1923, measured the polarization of heat radiation in 1895.

-H. Wieland, Chem. 1927, investigated optically active sterols, as well as alkaloids from certain tropical plants in the 1920s.

-A. Harden, Chem. 1929, studied the rotatory power of glycogen in the early 1900s, and later investigated polysaccharides, enzymes and the resolving effect of microorganisms on optically inactive acids.

-K. Landsteiner, Physiol./Medicine 1930, was making polarimetric observations on blood serum in the late 1920s.

-O. Warburg, Physiol./Medicine 1931, began his scientific career by doing research on optically active organic compounds with E. Fischer (category 1 above).

-P. Karrer, Chem. 1937, did his doctoral research on cobalt complexes under A. Werner (see category 1 above) and later carried out various studies (on polysaccharides, vitamins, tannins, glucosides, alkaloids etc.) where polarimeters were employed.

-R. Kuhn, Chem. 1938, did some of his prize-winning work on carotenes with a polarimeter, as well as research on mutarotation, fermentation and amygdalin derivatives in the early 1920s. He also wrote major review papers on optical activity.

-E.O. Lawrence, Phys. 1939, was a co-author of papers on work with electro-optical Kerr cells in the 1920's.

-G. de Hevesy, Chem. 1943, depended on calcite crystals in his pioneering studies on chemical analysis by X-ray fluorescence in the 1920s.

-M. Born, Phys. 1954, wrote important theoretical papers and books on crystal optics, the Kerr effect, and optical activity (e.g. Born 1935).

5. Some Nobel prize winners in the above or other fields had work done in their laboratories which involved equipment with Iceland spar components, although they may not personally have taken an active part in the execution of these projects.

-J. Violle made in the 1890s some temperature estimates with his polarizing spectrophotometer in the electrical furnaces of H. Moissan, Chem. 1906.

-H. Kamerlingh Onnes (Phys. 1913) provided facilities e.g. for P. Zeeman and later J. Becquerel in their researches on magneto-optics, as well as for H. Keesom's investigations of light scattering in fluids.

-J. Hildebrand built a new version of the König spectrophotometer in the laboratory of W. Nernst (Chem. 1920).

-W. Hanle investigated polarized fluorescence under J. Franck (Phys. 1925).

-R. Robison and W.T.J. Morgan measured the optical activity of phosphoric esters in A. Harden's (Chem. 1929) institute.

-G.S. Eadie measured blood sugar in J.J.R. Macleod's (Physiol./Med. 1923) laboratory.

6. Several Nobel prizes have been (even up to the present time) awarded for discoveries which relied to some extent on results from previous work employing polarimeters, polarization photometers and microscopes, etc. A few examples:

-In Chemistry, this includes the work of A. v. Baeyer 1905, E. Buchner 1907, A. Harden 1929, R. Robinson, C.F. and G.T. Cori all 1947, etc.

-Synthesis of Vitamin C as first carried out by W.N. Haworth's group in the early 1930s starts from sorbose or other sugars whose structure was clarified by E. Fischer. Haworth's methylation methods were originally developed by T. Purdie around 1900.

-Fischer also studied nucleic acids and polypeptides, as mentioned in A. Kossel's lecture when receiving the 1910 Nobel prize in Physiol./Medicine for research on these compounds.

-The Physics prize of A. Kastler 1966 was awarded for work which began around 1930 and concerned the polarization of resonance radiation, Raman-scattered light etc.

-Research on sugars in urine and in blood, as well as knowledge on the constitution of carbohydrates which had been previously obtained by polarimetry, aided in the studies on diabetes for which F.G. Banting and J.J.R. Macleod received the 1923 prize in Physiology or Medicine.

-Synthesis of asymmetric organic molecules by use of optically active catalysts and enzymes, initiated around 1910, was revived in the 1960s and led to the 1975 Chemistry prize being awarded to J.W. Cornforth and V. Prelog.

Appendix 6 in the Icelandic edition (2007) consists of translations of various expressions which appeared in the text in their original French or German. These all appear in English in the present English edition.

Appendix 7: Some periodicals frequently quoted in this report

Am. Mineral. = American Mineralogist, published by the American Mineralogical Society.

Am. J. Sci. = American Journal of Science, founded by B. Silliman.

Ann. Chim. = Annales de Chimie et de Physique, later split into two journals.

Ann. Phys. = Annalen der Physik (often attributed to J. Poggendorff or its other editors).

Arch. Sci. Phys. Nat. = Archives des Sciences Physiques et Naturelles, originally appearing as a Supplément to the Swiss journal Bibliothèque Universelle.

Astron. Nachr. = Astronomische Nachrichten.

Astrophys. J. = Astrophysical Journal, U.S.

Ber. Deutsch. Chem. Gesellsch. = Berichte der Deutschen Chemischen Gesellschaft zu Berlin.

Bioch. J. = Biochemical Journal, British.

Biochem. Zeitschr. = Biochemische Zeitschrift, founded by C. Neuberg.

British Assoc. Report = Report of the (Annual) Meeting of British Association for the Advancement of Science. Contains original articles, reviews, committee reports, etc.

Bull. Soc. Chim. = Bulletin de la Société Chimique de Paris (later: ...de France).

Bull. Soc. Minéral. Fr. = Bulletin de la Société Minéralogique de France, later Bulletin de la Société Française de Minéralogie.

Comptes Rendus Acad. Sci. Fr. = Comptes Rendus Hebdomadaires des Séances de l'Académie Française des Sciences. Short papers; longer ones appeared as Mémoires.

C.R. Assoc. Fr. = Compte-Rendu, Session (Annuelle) de l'Association Française pour l'Avancement des Sciences.

Edinb. Philos. J. = Edinburgh Philosophical Journal (later split into the Edinburgh Journal of Science and Edinburgh New Philosophical Journal).

Ind. Eng. Chem. = (Journal of) Industrial and Engineering Chemistry, U.S.

J. Am. Chem. Soc. = Journal of the American Chemical Society.

J. Biol. Chem. = Journal of Biological Chemistry, U.S.

J. Chem. Soc. = Journal of the Chemical Society, originally: …of London. For some decades, its odd-numbered volumes were called Transactions and contained articles, while even-numbered volumes contained abstracts of work published elsewhere.

J. Pharm. = Journal de Pharmacie et de Chimie.

J. Phys. = Journal de Physique Théorique et Appliquée, later combined with Le Radium.

J. Prakt. Chemie = (O.L. Erdmann's) Journal für Praktische Chemie.

Liebig's Ann. Chemie = (Justus von Liebig's) Annalen der Chemie und Pharmacie.

Mineral. Mag. = Mineralogical Magazine, British.

Mineral. Petrogr. Mitt. = (G. Tschermak's) Mineralogische und Petrographische Mitteilungen, Austrian.

Monatsh. Chemie = Monatshefte für Chemie, Austrian.

Naturwissensch. = Die Naturwissenschaften, preceded by the Naturwissenschaftliche Rundschau.

N. Jahrb. Mineral. = Neues Jahrbuch für Mineralogie, Geologie und Paläontologie.

Phil. Mag. = Philosophical Magazine. British, mostly on physics.

Phil. Trans. Royal Soc. = Philosophical Transactions of the Royal Society of London.

Phys. Rev. = The Physical Review, published by the American Physical Society.

Phys. Zeitschr. = Physikalische Zeitschrift.

Proc. Nat. Acad. Sci. = Proceedings of the National Academy of Sciences of the U.S.

Proc. Royal Soc. = Proceedings of the Royal Society of London. To begin with, it mostly contained abstracts of papers later appearing in the Philosophical Transactions.

Rev. Gén. Sci. = Revue Générale des Sciences Pures et Appliquées.

Rev. Sci. = Revue Scientifique (originally: Revue des Cours Scientifiques).

Sitzungsber. Akad. Wiss. Berlin = Sitzungsberichte der Königlich Preussischen Akademie der Wissenschaften zu Berlin (previously Monatsberichte, and still earlier Berichte). Large papers were published in a series of Abhandlungen.

Sitzungsber. Akad. Wiss. Wien = Sitzungsberichte der Kaiserlichen Akademie der Wissenschaften in Wien, Mathematisch-Naturwissenschaftliche Klasse. Larger publications often appeared in the Academy's Denkschriften.

Zeitschr. Anal. Chemie = (R. Fresenius') Zeitschrift für Analytische Chemie.

Zeitschr. Krystallogr. = Zeitschrift für Krystallographie (originally: …und Mineralogie).

Zeitschr. Phys. = Zeitschrift für Physik.

Zeitschr. Physikal. Chemie = Zeitschrift für Physikalische Chemie.

Zeitschr. Physiol. Chemie = (F. Hoppe-Seyler's) Zeitschrift für Physiologische Chemie.

References and notes

[Abbe E.] (1884) Abbe's analysing eye-piece. J. Royal Microsc. Soc. 4, 462. See descriptions in e.g., Duparc and Pearce 1907, and in Glazebrook 1923.

Abderhalden E. (editor, 1911) Biochemisches Handlexikon, II. Band. J. Springer, Berlin, 729 p. Contains chapters on saccharides and glycosides.

Abderhalden E. (1913) Abwehrfermente des Tierischen Organismus, 3rd ed. Springer, Berlin, 229 p.

Abderhalden E. (editor, 1920) Handbuch der Biologischen Arbeitsmethoden. Abt. I: Chemische Methoden, Teil 9. Urban & Schwarzenberg, Berlin, 636 p.

Abderhalden E. and A.H. Koelker (1907) Die Verwendung optisch-aktiver Fermente zur Prüfung der Wirksamkeit proteolytischer Fermente. Zeitschr. Physiol. Chemie 51, 294-310. See also Koelker 1910.

Abderhalden E. and L. Michaelis (1907) Der Verlauf der fermentativen Polypeptidspaltung. Zeitschr. Physiol. Chemie 52, 326-337.

Abderhalden E. and J. Schmid (1910) Bestimmung der Blutmenge mit Hilfe der "optischen Methode". Zeitschr. Physiol. Chemie 66, 120-127.

Abderhalden E. and M. Kiutsi (1912) Biologische Untersuchungen über Schwangerschaft. Zeitschr. Physiol. Chemie 77, 249-258.

Abderhalden E. and H.L. Chang (1912) Weiterer Beitrag zur Kenntnis von Polypeptiden, an deren Aufbau d-Aminobuttersäre beiteiligt ist. Zeitschr. Physiol. Chemie 77, 471-487.

Abderhalden E. and A. Weil (1913) Über eine neue Aminosäure von der Zusammensetzung $C_6H_{13}NO_2$, gewonnen bei der totalen Hydrolyse der Proteine aus Nervensubstanz. Zeitschr. Physiol. Chemie 84, 39-59. More in 88, 272-275.

Abderhalden E. and E. Eichwald (1918) Über optisch-aktives Propylenglykol und optisch-aktive β-Oxy-buttersäure. Ber. Deutsch. Chem. Gesellsch. 51, 1312-1322.

Abney W. de W. and E.R. Festing (1888) Colour photometry. Part II. The measurement of reflected colours. Phil. Trans. Royal Soc. 179, 547-570.

Abraham H. and Buisson H. (1897) Nouvelle méthode optique d´étude des courants alternatifs. Comptes Rendus Acad. Sci. Fr. 125, 92-94.

Abraham H. and J. Lemoine (1900) Nouvelle méthode de mesure des durées infinitesimals. Analyse de la disparition des phénomènes électro-optiques. Ann. Chim. 20, 264-287. See also their paper in Comptes Rendus Acad. Sci. Fr. 130, 245-248.

Abria J.J.B. (1873) Directions des mouvements vibratoires des rayons réfractés dans les cristaux uniaxes. Comptes Rendus Acad. Sci. Fr. 77, 1268-1269. Cf. Schrauf 1885-86.

Abria J.J.B. (1874, 1875) Études de la double réfraction – vérification de la loi d´Huyghens. Ann. Chim. 1, 289-317. Double réflexion intérieure dans les cristaux biréfringents uniaxes. 5, 550-570. Experiments on quartz and Iceland spar.

Adami J.G. and L. Aschoff (1906) On the myelins, myelin bodies and potential fluid crystals of the organism. Proc. Royal Soc. B78, 359-368. See also a paper on the same subject by J.G.A. in J. Am. Medical Assoc. 48, 463-469, 480, 1907.

Adams F.D. (1910) An experimental investigation into the action of differential pressure on certain minerals and rocks. J. Geol. 18, 489-525.

Adams F.D. and J.T. Nicolson (1901) An experimental investigation into the flow of marble. Phil.

Trans. Royal Soc. A195, 363-401.

Adams L.H. and E.D. Williamson (1919) The relation between birefringence and stress in various types of glass. J. Wash. Acad. Sci. 9, 609-623.

Adams L.H. and E.D. Williamson (1920) The annealing of glass. J. Franklin Inst. 190, 597-631, 835-870. See also J. Opt. Soc. Am. 4, 213-223.

Adams M. (1915) Composition of wood turpentine. J. Ind. Eng. Chem. 7, 957-960.

Adams W.G. (1875,1879) A new polariscope. Phil. Mag. 50, 13-17. Measuring polariscopes. 8, 275-277. See also Becke 1879.

Ahrens C.D. (1871) On a new form of binocular eye-piece and binocular microscope for high powers. Monthly Microsc. J. 5, 113-115.

Ahrens C.D. (1884) On a new form of polarizing prism. J. Royal Microsc. Soc. 4, 533-534, also in Phil. Mag. 19, 69-70, 1885. More in 6, 397-398, 1886.

Ahrens C.D. (1899) Large Nicol prisms. Nature 61, 31-32.

Aignan A. (1890) Sur une falsification de l'huile de lin. Comptes Rendus Acad. Sci. Fr. 110, 1273-1275. See also his paper on turpentine in 109, 944-946, 1889.

Ainsworth E. (1948) Rainbow of death. A chapter on p. 169-184 in his book California Jubilee. Murray & Gee, Inc., Culver City, California, 272 p.

Airy G.B. (1831) On the undulatory theory of optics. In his Mathematical Tracts on the Lunar and Planetary Theories,..., 2nd ed., 249-410. J. & J.J. Deighton, London.

Airy G.B. (1833a) On a new analyzer, and its use in experiments of polarization. Trans. Cambr. Philos. Soc. 4, 313-322. First description of a quarter-wave plate. Translation in Ann. Phys. 26, 140-150, 1832.

Airy G.B. (1833b) On a remarkable modification of Newton´s rings. Trans. Cambr. Philos. Soc. 4, 279-288. More p. 409-424. See also Phil. Mag. 10, and Lloyd 1834.

Airy G.B. (1833c) On the nature of the light in the two rays produced by the double refraction of quartz. Trans. Cambr. Philos. Soc. 4, 79-124, 199-208.

[Albert J.W.] (1828) Apparate zu Versuchen über die Polarisation des Lichts. Trommsdorff's Neues J. Pharmacie 16(2), 290-293.

Albert Sohn J.V. (1859) Optische Apparate. Ann. Phys. 108, 658-660. Advertisement.

Allen E.T., W.P. White, F.E. Wright and E.S. Larsen (1909) Diopside and its relations to calcium and magnesium metasilicates. Am. J. Sci. 27, 1-47.

Allen F. (1902) Persistence of vision in color-blind subjects. Phys. Rev. 15, 193-225.

Allihn F. (1880) Ueber den Verzuckerungsprocess bei der Einwirkung von verdünnter Schwefelsäure auf Stärkemehl bei höheren Temperaturen. J. Prakt. Chemie 22, 46-97.

Allison S.K. (1932) The reflecting and resolving power of calcite for x-rays. Phys. Rev. 41, 1-20.

Allison S.K. and W. Duane (1925) On scattered radiation due to X-rays from molybdenum and tungsten targets. Proc. Nat. Acad. Sci. 11, 25-27.

Allport S. (1870) The microscopical examination of rocks and minerals. Monthly Microsc. J. 4, 98-103.

Allport S. (1874) On the microscopic structure and composition of British Carboniferous dolerites. Quart. J. Geol. Soc. 30, 529-567.

Amberg S. and W. Jones (1911) On the application of the optical method to a study of the enzymatic decomposition of nucleic acids. J. Biol. Chem. 10, 81-87.

Ambronn H. (1896) Ueber Pleochroismus pflanzlicher und thierischer Fasern, die mit Silber- und Goldsalzen gefärbt sind. Ber. Kön. Sächs. Gesellsch. Wiss. 48, 613-628.

Ambronn H. (1913) Die Untersuchung der Nitrozellulosen im Polarisationsmikroskop. Kolloid-Zeitschr. 13, 200-207.

Ambronn H. (1916) Ueber das Zusammenwirken von Stäbchendoppelbrechung und Eigendoppelbrechung. Kolloid-Zeitschr. 18, 90-97, 273-281. Continued in 20, 173-185, 1917.

Ambronn H. and A. Frey (1926) Das Polarisationsmikroskop. Seine Anwendung in der Kolloidforschung und in der Färberei. Akad. Verlagsbuchhandlung, Leipzig, 194 p.

American Mineralogist (1918) The Abbé René-Just Hauy celebration. Am. Mineral. 3, 49-133. Many authors.

Amici G.B. (1844) Note sur un appareil de polarisation. Ann. Chim. 12, 114-117. Description d´un petit microscope achromatique. 117-120. A description and a drawing of the microscope appeared on p. 229-231 in vol. 3 of R. Gerbi's book Corso Elementare di Fisica, Pisa 1832.

Aminoff G. (1946) Large dispersion in X-ray spectrography obtained by using ground faces. Nature 157, 517. Uses Iceland spar.

Ammann E.O. and G.A. Massey (1968) Modified forms for Glan-Thompson and Rochon prisms. J. Opt. Soc. Am. 58, 1427-1433. See also U.S. patent no. 3,511,556 1970.

Ampère A.M. (1815) Démonstration d'un théorême d'où l'on peut déduire toutes les lois de la réfraction ordinaire et extraordinaire. Mém. de l'Institut 14, 235-248.

Ampère A.M. (1832) Idées de M. Ampère sur la chaleur et sur la lumière. Biblioth. Univ. 49, 225-235, cf. discussion in Bull. Soc. Philom. 1832, p. 17-18.

Ampère A.M. (1835) Note sur la chaleur et sur la lumière considerées comme résultant de mouvemens vibratoires. Ann. Chim. 58, 432-444.

Andant A. (1922) Sur les variations de l'opalescence critique avec la temperature et la longueur d'onde de la lumière incidente. Comptes Rendus Acad. Sci. Fr. 174, 1333-1335. Detailed results appeared in Ann. de Phys. 1, 346-419, 1924.

Andersen O. (1915) The system anorthite-forsterite-silica. Am. J. Sci. 39, 407-454.

Anderson R.J. and M.G. Moore (1923) A study of the phytosterols of corn oil, cottonseed oil and linseed oil. J. Am. Chem. Soc. 45, 1944-1953. More papers in 1924-27.

Anderson W.C. (1937) A measurement of the velocity of light. Rev. Sci. Instr. 8, 239-247.

Anderton J. (1895) Method by which pictures projected upon screens by magic lanterns are seen in relief. U.S. patent no. 542,321, 4 p. Improved in British patent no. 1835, 1898.

Andrieu L. (1886) Sur un chromatomètre, appareil destiné à mesurer la couleur des liquides. Comptes Rendus Acad. Sci. Fr. 103, 281-284.

Ångström A.J. (1849) Mémoire sur la polarisation rectiligne et la double réfraction des cristaux à trois axes obliques. Reprint from Acta Reg. Soc. Upsal., 72 p.

Ångström A.J. (1850) Om de monoklinoedriska kristallernes molekulära konstanter. Kungl. Sv. Vetensk.-Akad. Handl. 1850, 425-462. Translated in Ann. Phys. 86.

Ångström A.J. (1853) Om polarisationsplanets betydelse inom optiken. Öfversikt Kungl. Sv. Vetensk.-Akad. 10, 125-140. Translated in Ann. Phys. 90, 582-600.

Anitschkow N. and S. Chalatow (1913) Ueber experimentelle Cholesterinsteatose und ihre Bedeutung für die Entstehung einiger pathologischer Prozesse. Centralbl. Allgem. Pathol. u. Pathol. Anatomie 24, 1-9, translated in Arteriosclerosis 3, 178-182, 1983.

Annett H.E. and M.N. Bose (1923) The estimation of narcotine and papaverine in opium. Analyst 48, 53-58.

Antrick O. (1887) Das optische Verhalten des Cocains und eine Methode zur Prüfung seines salzsauren Salzes auf Reinheit. Ber. Deutsch. Chem. Gesellsch. 20, 310-322.

Appelquist J. (1987) Optical activity: Biot´s bequest. American Scientist 75(1), 59-68. Interesting review. See also a paper by T.M. Lowry in Nature 117, 271-275, 1926.

Appleton E.V. (1929) Telephotography by wire and wireless. The Times 29 Oct, p. xix.

Arago F. (1811) Mémoire sur une modification remarquable qu´éprouvent les rayons lumineux dans leur passage à travers certains corps diaphanes d´optique. Mém. de l´Institut 12 (pte. 1), 93-134. A summary in Bull. Soc. Philom. 2, 358-360, 371-375 and 387-389 is translated in Ann. Phys. 40, 145-161, 1812.

Arago F. (1821) Rapport fait à l'Académie des Sciences, le lundi 4 juin 1821, sur un mémoire de

M. Fresnel relatif aux couleurs des lames cristallisées douées de la double réfraction. Ann. Chim. 17, 89-102. See also his reply to J.B. Biot p. 258-273.

Arago F. (1833) [Short notice in Ann. Phys. 29, 191-192, mentioning photometric measurements on moonlight].

Arago F. (1835, 1841) Ueber das Gesetz des Cosinusquadrats für die Intensität des polarisirten Lichts, welches von doppeltbrechenden Krystallen durchgelassen wird. Ann. Phys. 35, 444-457 (translation). Also a short paper without a title in Comptes Rendus Acad. Sci. Fr. 13, 840-842. Basic ideas for polarization photometers.

Arago F. (1847) Sur un micromètre oculaire à double réfraction. Comptes Rendus Acad. Sci. Fr. 24, 400-401. More details in vol. II of his Astronomie Populaire, 74-80, 1855.

Arago F. (1850) Mémoires sur la photométrie. Comptes Rendus Acad. Sci. Fr. 30, 305-309, 365-366, 425-426, 617-618. Abbreviated versions of four of the seven memoirs appearing in Arago 1858c.

Arago F. (1852) Notice sur les observations qui ont fait connaître la constitution du soleil et celles de diverses étoiles. Translation in Edinb. New Philos. J. 52, 193-210 of a paper delivered to the Academy of Science in Oct. 1851. Arago had already reported some of these observations long ago, see Ann. Chim. 27, 89-90, 1824.

Arago F. (1858a) Notice sur la polarisation de la lumière. (An entry in Encyclopaedia Britannica 1824, translated into English by Th. Young). Oeuvres Complètes de Fr. Arago 7, 291-446.

Arago F. (1858b) Mémoire sur les moyens de résoudre la plupart des questions de photométrie que la découverte de la polarisation de la lumière a fait naitre. Oeuvres Complètes de Fr. Arago 10, 150-167. See also many items on the polarization of light and on photometry in the Appendix of this volume, p. 335-594.

Arago F. (1858c) Mémoires sur la photométrie. Oeuvres Complètes de Fr. Arago 10, 168-297. Seven separate memoirs.

Arago F. and A. Fresnel (1819) Mémoire sur l´action que les rayons de lumière polarisés exercent les uns sur les autres. Ann. Chim. 10, 288-305. Interference experiments.

Arason G. (2004) Silfurberg unnid i Hoffelli (interview). Skaftfellingur 17, 75-82.

Archard J.F. and Taylor A.M. (1948) Improved Glan-Foucault prism. J. Sci. Instr. 25, 407-409.

Armstrong E.F. (1903) Studies on enzyme action I. The correlation of the stereoisomeric α- and β-glucosides with the corresponding glucoses. J. Chem. Soc. Trans. 83, 1305-1313.

Armstrong E.F. (1904) Studies on enzyme action II. The rate of change, conditioned by sucroclastic enzymes, and its bearing on the law of mass action. Proc. Royal Soc. 73, 500-516, continued 516-526, 526-537, 537-542 as well as in 74, 184-201,1905.

Armstrong H.E. et al. (1908) Studies of the processes operative in solutions – Parts VI-X. Proc. Royal Soc. A81, 80-140, esp. parts IX-X by R.J. Caldwell and R. Whymper.

Arnaud A. (1886) Sur la présence de la cholestérine dans la carotte; recherches sur ce principe immédiat. Comptes Rendus Acad. Sci. Fr. 102, 1319-1322.

Arnaud A. (1898) Recherches sur l'ouabaïne. Comptes Rendus Acad. Sci. Fr. 126, 346-349, more 1208-1211.

Arndtsen A. (1858) Note sur la polarisation circulaire de la lumière dans divers liquides. Ann. Chim. 54, 403-421, extract in C.R. 47, 738-740. On e.g. tartaric acid.

Arnold J.O. (1917-18) Pyrometry applied to the hardening of high-speed steels. Trans. Faraday Soc. 13, 271-275.

Aron H. and F. Müller (1906) Über die Lichtabsorption des Blutfarbstoffs. Arch. Physiol. 1906 (Supplementband), 109-132.

Arons L. (1910,1912) Das Chromoskop. Ann. Phys. 33, 799-832. Das Arbeiten mit dem Farbenweiser (Chromoskop) 39, 545-568. This device is based on Nicol prisms. See also Borchardt 1913.

Arrhenius S. (1889) Über die Reaktionsgeschwindigkeit bei der Inversion von Rohrzucker durch Säuren. Zeitschr. Physikal. Chem. 4, 226-248.

Arzruni A. (1893) Physikalische Chemie der Krystalle. F. Vieweg und Sohn, Braunschweig, 365 p. Includes history of isomorphism and related concepts.

Aschan O. (1901) Die Constitution des Camphers. Liebig's Ann. Chemie 316, 196-241.

Aschkinass E. (1900) Ueber anomale Dispersion im ultraroten Spectralgebiete. Ann. Phys. 1, 42-68.

Aster A.K. (1922) The optical properties of molten metals. Phys. Rev. 20, 349-357.

Auerbach F. and D. Krüger (1923a,b) Die polarimetrische Bestimmung der Äpfelsäure. Zeitschr. Unters. Nahr.- Genussm. 46, 97-154. Bestimmung von Äpfelsäure in Fruchtsäften und anderen Fruchterzeugnissen, 177-217.

Aufsess O. v.u. zu (1904) Die Farbe der Seen. Ann. Phys. 13, 678-711.

Ault R.G., D.K. Baird, H.C. Carrington, W.N. Haworth, R. Herbert, E.L. Hirst, E.G.V. Percival, F. Smith and M. Stacey (1933) Synthesis of d- and of l- ascorbic acid and of analogous substances. J. Chem. Soc. 1933, 1419-1423. See also papers by R.W. Herbert et al., 1270-1290 and D.K. Baird et al. in the same journal 1934, 62-67.

Azzam R.M. (editor, 1991) Selected Papers on Ellipsometry. Milestone Series 27, SPIE Optical Engineering Press, Bellingham, 736 p.

Babcock H.D. (1923) A determination of e/m from measurements of the Zeeman effect. Astrophys. J. 58, 149-163.

Babinet J. (1837) Précis d´un mémoire sur les caractères optiques des minéraux. Comptes Rendus Acad. Sci. Fr. 4, 758-766.

Babinet J. (1840) Sur un nouveau point neutre dans l´atmosphère. Comptes Rendus Acad. Sci. Fr. 11, 618-620. Additional papers appeared on this later.

Babinet J. (1853) Note descriptive du photomètre industriel. Comptes Rendus Acad. Sci. Fr. 37, 774-775. Also British Assoc. Report 24, pt. ii, 2, 1854.

Bache R. (1917) What is color? Illustrated World 27, 405-406.

Bachmann W. (1915) Über Ultramikroskopie und kolloide Lösungen. Naturwissensch. 3, 181-185, 191-195.

Bäckström H.L.J. (1921) Über die Affinität der Aragonit-Calcit-Umwandlung. Zeitschr. Physikal. Chemie 97, 179-228.

Bäckström H.L.J. (1925) The thermodynamic properties of calcite and aragonite. J. Am. Chem. Soc. 47, 2432-2442, more 2443-2449.

Badermann G. (1910) Der isländische Doppelspat und Natronsalpeter. Zeitschr. Angew. Chemie 23, 727-728. A similar note appears in Ind. Chim. 10, 330, 1910, and in J. Franklin Inst. 172, 92, 1911.

Baeyer O. v. and E. Gehrcke (1909) Über den Zeemaneffekt in schwachen Magnetfeldern. Ann. Phys. 29, 941-955.

Bailey R.D. (1907) The Brewer's Analyst. A Systematic Handbook. Kegan Paul, Trench, Trübner & Co., London, 423 p.

Baillaud J. (1924) Étude de spectrophotométrie stellaire. Bull. Astron. 4, 275-349.

Baird & Tatlock (London) Ltd. (1912, 1914) Price List of Apparatus for Experiments in Practical Physics, 650 p. Price List of Chemical and Bacteriological Apparatus, Chemicals, and Reagents, 1283 p.

Bakhuyzen H.G. v. d. S. (1872) Zur Theorie des Polaristrobometer und des drehenden Nicols. Ann. Phys. 145, 259-278.

Balmer J.J. (1885) Notiz über die Spektrallinien des Wasserstoffs. Verhandl. Naturf. Gesellsch. Basel 7, 548-553, 750-752. Also in Ann. Phys. 25, 80-87.

Bang I. (1913) Der Blutzucker. J.F. Bergmann, Wiesbaden, 162 p.

Barabascheff N. (1927) Polarimetrische Beobachtungen an der Mondoberfläche und an Gesteinen. Astron. Nachr. 229, 7-14.

Barger G. and F.H. Carr (1907) The alkaloids of ergot. J. Chem. Soc. Trans. 91, 337-353. More by G.B. and A.J. Ewins in 97, 284-292, 1910.

Barker S.G. (1916) The application of the Kerr effect to the determination of the saturation values for magnetism of ferro-magnetic metals, compounds and alloys. Proc. Phys. Soc. 29, 1-32.

Barkla C.G. (1904) Polarisation in Röntgen rays. Nature 69, 463. More in Phil. Trans. Royal Soc. A204, 467-479, 1905, continued in Proc. Royal Soc. A77, 247-255, 1906.

Barlow W. (1883) Probable nature of the internal symmetry of crystals. Nature 29, 186-188, 205-207. Barlow also made other important contributions to this subject.

Barlow W. (1897) The relations of circular polarization, as occurring both in the amorphous and crystalline states, to the symmetry and partitioning of homogeneous structures, i.e. of crystals. Phil. Mag. 11, 119-136.

Barnard F.A.P. (1863) Lectures on the undulatory theory of light. Annual Report of the Board of Regents of the Smithsonian Institution for 1862, 107-239.

Barr E. S. (1962) The infrared pioneers – II. Macedonio Melloni. Infrared Physics 2, 67-74. Article I (1961) is on W. Herschel.

Bartholin R. (1669) Experimenta Crystalli Islandici Disdiaclastici Quibus mira & insolita Refractio Detegitur. D. Paulli, Hafniae, 60 p. Also published 1670 and later, e.g. 1991 as Acta Hist. Scient. Nat. Medic. 40, Danish National Library of Science and Medicine, Copenhagen. With an English translation and an Introduction by J.Z. Buchwald and K. M. Pedersen: Bartholin, his discovery and its significance, p. 9-29.

Bartholin R. (1671) An accompt of sundry experiments made and communicated by that learned mathematician Dr. Erasmus Bartholin, upon a chrystal-like body, sent to him out of Island. Phil. Trans. Royal Soc. 5 (for 1670), 2039-2048.

Bartlett W.H.C. (1859) On the direction of molecular motions in plane polarized light. Am. J. Sci. 30, 361-367.

Basset A.B. (1892) A Treatise on Physical Optics. Deighton, Bell & Co., Cambridge, 411 p.

Basso G. (1883) Studi sulla riflessione cristallina. Nuovo Cimento 14, 5-26.

Basso G. (1885) Fenomeni di riflessione cristallina interpretati secondo la teoria elettromagnetica della luce. Nuovo Cimento 18, 84-90, 128-145.

Bates F.J. (1906) Spectrum lines as light sources in polariscopic measurements. Bull. Bureau of Standards 2(2), 239-248. Mercury light as recommended here is also specified in 1907 U.S. Customs regulations on imported sugars and molasses.

Bates F.J. (1908) A quartz compensating polariscope with adjustable sensibility. Bull. Bureau of Standards 4, 461-466 and 5, 193-198. See U.S. patent no. 844012.

Bates F.J. and Associates (1942) Polarimetry, Saccharimetry and the Sugars. Circular no. 440. National Bureau of Standards, Washington D.C., 810 p. Supersedes older circulars.

Batuecas T. (1950) The pykno-X-ray method of determining atomic masses. Nature 165, 61-62. Includes work on calcite.

Baudrimont A. (1841) Du Sucre et sa Fabrication. J.-B. Baillière, Paris, 136 p.

Bauer E. (1891) Gährungstechnische Untersuchungsmethoden. F. Vieweg & Sohn, Braunschweig, 408 p.

Bauer M. (1882) Ueber die Einrichtung des Fuess´schen Achsenwinkelapparats als Totalreflectometer. N. Jahrb. Mineral. 1882(1), 132-138.

Bauer M. (1904) Lehrbuch der Mineralogie, 2nd ed. Schweizerbart, Stuttgart, 924 p.

Baumann C. and J. Grossfeld (1917) Die polarimetrische Bestimmung der Stärke bei Gegenwart sonstiger optisch aktiver Stoffe. Zeitschr. Unters. Nahr.-Genussm. 33, 97-103.

Baumgarten G. (1874) Die Elasticität von Kalkspatstäbchen. Ann. Phys. 152, 369-397.

Baumgartner A. (1830, 1845) Die Naturlehre nach ihrem Gegenwärtigen Zuständе. J.G. Heubner, Wien, 1060 p. 8th ed. C. Gerold, Wien, 937 p.

Baumhauer H. (1869) Ueber die Aetzfiguren und den Asterismus am Doppelspathe. Ann. Phys. 138, 563-565. More in 139, 349-350; 140, 271-276, 1870 and 145, 459-463, 1871. Also: Ueber einige optische Erscheinungen am Kalkspath. Das Ausland 42, 1097-1098.

Baumhauer H. (1878-79) Ueber künstliche Kalkspath-Zwillinge nach –1/2R. Zeitschr. Kristallogr. 3, 588-591. On artificial twinning and slip planes.

Baumhauer H. (1883) Über einige optische Erscheinungen am Quarz, Gyps und Kalkspath. Mineral. Petrogr. Mitth. 5, 285-289.

Bausch & Lomb Optical Co. (1904) Catalog F: Apparatus and Supplies for Chemical and Biological Laboratories. Rochester, N.Y., 438 p.

Bayley W.S. (1937) Mineralogy's contribution to other sciences and to industry. Am. Mineral. 22, 147-168.

Bayliss W.M. (1912) Researches on the nature of enzyme action. III. The synthetic action of enzymes. J. Physiol. 46, 236-266.

Beams J.W. and F. Allison (1927) The differences in the time lags of the Faraday effect behind the magnetic field in various liquids. Phys. Rev. 29, 161-164.

Bearden J.A. (1930) A double crystal study of scattered X-rays. Phys. Rev. 36, 791-798.

Bearden J.A. (1931a,b) Absolute wave-lengths of the copper and chromium K-series. Phys. Rev. 37, 1210-1229. The grating constant of calcite crystals. 38, 2089-2098.

Bearden J.A. (1935) The measurement of X-ray wavelengths by large ruled gratings. Phys. Rev. 48, 385-390.

Bearden J.A. (1965) X-ray wavelength conversion factor Λ. Phys. Rev. 137, B181-B189.

Bearden J.A. and G. Schwarz (1950) A precision evaluation of h/e by X-rays. Phys. Rev. 79, 674-684.

Beaulard F. (1893) Étude du quartz comprimé soumis à une compression normale à l'axe optique. J. Phys. 2, 459-471, more 472-478.

Beccaria G.B. (1762) An account of the double refraction in crystals. Phil. Trans. Royal Soc. 52, 486-490 (in Latin). A more detailed publication appeared in 1764.

Beccaria G.B. (1772) Observations sur la double réfraction du cristal de roche. Introd. Observ. Phys. Hist. Nat. Arts 2, 504-510.

Béchamp A. (1855) Note sur l'influence que l'eau pure et certaines dissolutions salines exercent sur le sucre de canne. J. Pharm. 27, 274-276, more in 33, 210-211, 1858.

Béchamp A. (1863) Sur les générations dites spontanées. Comptes Rendus Acad. Sci. Fr. 57, 958-960. More in 58, 321-323, 1864.

Béchamp A. (1873) Recherches sur l´isomérie dans les matières albuminoïdes. Comptes Rendus Acad. Sci. Fr. 77, 1525-1529.

Béchamp A. (1884) Mémoire sur les matières albuminoïdes. Mém. Savants Étrang. 28, no. 3, 516 p.

Becher S. (1914) Über eine auf die Struktur des Echinodermenskelettes gegründete neue Methode zur Herstellung von polarisiertem Lichte. Zool. Anz. 44, 122-136.

Beck C. (1924) The Microscope, Part II. An Advanced Handbook. R. & J. Beck, London, 231 p.

Beck H. (1943) Über eine Neukonstruktion des Polarisationsphotometers nach Martens. Zeitschr. Techn. Phys. 24, 226-228.

R. & J. Beck (1882) Illustrated Price List of Microscopes, Microscopic Apparatus and other Optical Instruments. London, 176 p.

Becke F. (1879) Ein neuer Polarisations-Apparat von E. Schneider in Wien. Mineral. Petrogr. Mitth. 2, 430-437. See also Schneider´s paper in Carl´s Rep. 15, 744-754.

Becke F. (1889) Die Krystallform des Traubenzuckers und optisch activer Substanzen im Allgemeinen. Mineral. Petrogr. Mitth. 10, 464-498.

Becke F. (1893) Über die Bestimmbarkeit der Gesteinsgemengtheile, besonders der Plagioklase auf Grund ihres Lichtbrechungsvermögens. Sitzungsber. Akad. Wiss. Wien 102(1), 358-376.

Becke F. (1904) Optische Untersuchungsmethoden. 41 p.- reprint from Denkschr. Akad. Wiss. Wien 75, 55-95.

Becke F. (1906) Die optischen Eigenschaften der Plagioklase. Mineral. Petrogr. Mitt. 25, 1-42.

Beckenkamp J. (1912) Über Beziehungen zwischen Kristallographie und Chemie erläutert an den Mineralien Quarz und Kalkspat. Sitzungsber. Physikal.-Med. Gesellsch. Würzburg 1912, 64-89.

Beckenkamp J. (1915) Statische und Kinetische Kristalltheorien. Zweiter Teil. Gebr. Borntraeger, Berlin, 670 p.

Beckenkamp J. (1923) Atomanordnung und Spaltbarkeit. Zeitschr. Kristallogr. 58, 7-39.

Becker A. (1886) Ueber die Schmelzbarkeit des kohlensauren Kalkes. Mineral. Petrogr. Mitth. 7, 122-145.

Becker A. (1903) Kristalloptik. Ferdinand Enke, Stuttgart, 362 p.

Beckmann E. (1889) Untersuchungen in der Campherreihe. Liebig's Ann. Chemie 250, 322-375. More in 262, 289, 291 and in other journals for the next 20 years.

Beckmann E. (1912) Natriumlampen für Polarisation. Ber. Deutsch. Chem. Gesellsch. 45, 2523-2529.

Becquerel A.C. (1823) Sur le développement de l'électricité par la pression. Ann. Chim. 22, 5-34. English translation in Phil. Mag. 62. See Ann. Phys. 73, 117-127 for an evaluation by a committee of the French Academy of Sciences.

Becquerel A.C. (1827) De quelques phénomènes électriques produits par la pression et le clivage des cristaux. Ann. Chim. 36, 265-271, transl. in Ann. Phys. 12, 147-152, 1828.

Becquerel A. (1849) Recherches sur le pouvoir moléculaire rotatoire de l´albumine du sang et des liquides organiques. Description d´un albuminimètre. Comptes Rendus Acad. Sci. Fr. 29, 625-629. More in Arch. Gén. Méd. 22, 52-70, 156-172, 1850.

Becquerel E. (1847) Rapport fait, au nom du comité des arts économiques, sur un saccharimètre présenté par M. Soleil, opticien. Bull. Soc. Encouragement 46, 545-552.

Becquerel E. (1857 and later) Recherches sur les effets lumineux qui résultent de l´action de la lumière sur les corps. Comptes Rendus Acad. Sci. Fr. 45, 815-819. More in 46, 969-975, 1858 and 47, 105-106, 1858. See also Ann. Chim. 55, 5-119 and 57, 40-124.

Becquerel E. (1861) Recherches sur divers effets lumineux qui résultent de l´action de la lumière sur les corps. Quatrième mémoire: Intensité de la lumière émise. Ann. Chim. 62, 5-100. Luminescence measurements, using a photometer with Nicol prisms.

Becquerel E. (1863) Recherches sur la détermination des hautes températures et l'irradiation des corps incandescents. Ann. Chim. 68, 49-143, see also Comptes Rendus Acad. Sci. Fr. 55, 826-829 1862 and 57, 681-682, 1863.

Becquerel E. (1867) La Lumière. Ses Causes et ses Effets. Tome I, Sources de Lumière. Didot Frères, Fils & C^{ie}, Paris, 431 p.

Becquerel E. (1885, 1886) Étude spectrale des corps rendus phosphorescents par l'action de la lumière ou par des décharges électriques. Comptes Rendus Acad. Sci. Fr. 101, 205-210. Action du manganèse sur le pouvoir de phosphorescence du carbonate de chaux. 103, 1098-1101. Observations on Iceland spar.

Becquerel H. (1877) Recherches expérimentales sur la polarisation rotatoire magnétique. Ann. Chim. 12, 5-87.

Becquerel H. (1880a) Mémoire sur la polarisation atmosphérique et l'influence du magnétisme terrestre sur l'atmosphère. Ann. Chim. 19, 90-125. Describes an instrument offered in Pellin's 1889 catalog.

Becquerel H. (1880b) Recherches expérimentales sur la polarisation rotatoire magnétique dans les gaz. Ann. Chim. 21, 289-370.

Becquerel H. (1897) Sur une interpretation applicable au phénomène de Faraday et au phénomène de Zeeman. Comptes Rendus Acad. Sci. Fr. 125, 679-685. More in 127, 647-651 and 899-904, 1898. One of the first explanations of the relation between these.

Becquerel H. and H. Deslandres (1898) Contribution à l´étude du phénomène de Zeeman. Comptes Rendus Acad. Sci. Fr. 126, 997-1001. Observations nouvelles sur le phénomène de Zeeman. 127, 18-24.

Becquerel J. (1909) Sur l'existence, dans la décomposition magnétique des bandes d'absorption d'un cristal uniaxe, de dissymétries de positions observées parallèlement aux lignes de force du champ. Comptes Rendus Acad. Sci. Fr. 149, 200-202.

Becquerel J. (1910) Sur la phosphorescence polarisée et sur la corrélation entre le polychroïsme de phosphorescence et le polychroïsme d'absorption. Comptes Rendus Acad. Sci. Fr. 151, 859-161. More in 153, 936-938, 1911.

Beer A. (1851, 1852) Versuch die Absorptions-Verhältnisse des Cordierites für rothes Licht zu bestimmen. Ann. Phys. 84, 37-44. Uses photometer with Iceland spar rhombs. Bestimmung der Absorption des rothen Lichts in farbigen Flüssigkeiten, 86, 78-88.

Beer A. (1853, 1882) Einleitung in die Höhere Optik, 430 p. and 2nd ed. with some revisions by V. v. Lang, 423 p. Both published by F. Vieweg und Sohn, Braunschweig.

Beer A. (1854) Herleitung der Cauchy´schen Reflexionsformeln für durchsichtige Mittel. Ann. Phys. 91, 467-481. Ueber die Cauchy´sche Näherungsformeln für Metallreflexion, 561-568. General formulas in 92, 402-419.

Behrens H. (1891) Reactionen für mikrochemische Untersuchungen, N. Jahrb. Mineral. Beilageb. 7, 435-470.

Behrens-Kley (1915) Mikrochemische Analyse, 3rd ed. L. Voss, Leipzig, 368 + 136 p.

Beilby G.T. (1909) Surface flow in calcite. Proc. Royal Soc. A82, 599-605, see also his experiments on the polishing of Iceland spar in 79, 218-225, 1904.

Belar M. (1923) Spektrophotometrische Untersuchung der Verfärbungserscheinungen durch Becquerelstrahlen. Sitzungsber. Akad. Wiss. Wien 132(2a), 45-54, more 261-277.

Bénard H. (1920) Sur l'utilité de la lumière polarisée dans les observations faites en mer...Bull. Officiel Dir. Recherches Inventions 1, 229-248.

Bence Jones H. (1852) On diabetes. Medical Times and Gazette, N.S. 4, 101-104.

Bence Jones H. (1861) On sugar in the urine. Quart. J. Chem. Soc. 14, 22-42.

Benedict F.G. and E.P. Joslin (1910) Metabolism in Diabetes Mellitus. Carnegie Inst. Washington Publ. no. 136, 234 p.

Benedict H.C. (1930) The polarizing microscope in organic chemistry. Ind. Eng. Chem. Anal. Ed. 2, 91-93.

Benediktsson J. (1939) Gísli Magnússon. Safn Fræðafélagsins 11. Hið íslenzka fræðafélag í Kaupmannahöfn, Reykjavík. 160 p. An essay on a 17th century Icelander who was acquainted with the Bartholin family.

Benediktsson J. (1948) Ole Worm´s Correspondence with Icelanders. Bibliotheca Arnamagnæana 7. E. Munksgaard, Copenhagen, 552 p.

Benjamin J.P. (1848) Soleil's saccharometer. de Bow's Commercial Review of the South and West 5, 357-364.

Bennett J. and H. Bennett (1978) Polarization. Section 10 in W.G. Driscoll, ed.: Handbook of Optics. McGraw-Hill, New York, 164 p. Describes prism types, etc.

Benoit R. (1888) [Measurements of the thermal expansion of Iceland spar, see e.g. Cooksey and Cooksey 1930]. Travaux et Mémoires, Bureau Internat. Poids et Mesures 6.

Bérard J.E. (1817) Mémoire sur les propriétés des différentes espèces de rayons qu´on peut séparer au moyen du prisme de la lumière solaire. Mém. Soc. Arcueil 3, 5-47. First paper on the polarization of heat rays, presented in 1812.

Berek M. (1913a) Mineralogisches Demonstrationsapparat. Centralbl. Mineral. 1913, 181-189.

Berek M. (1913b) Zur Messung der Doppelbrechung hauptsächlich mit Hilfe des Polarisationsmikroskops. Centralbl. Mineral. 1913, 388-396, 427-435, 464-470, 580-582. Berek M. (1915-20) Ueber Neueinrichtungen am Polarisations-Mikroskop. Zeitschr. Kristallogr. 55, 615-626.

Berek M. (1931) Das Problem der quantitativen Mikroskopie der Erzmineralien und seine Lösung. Zeitschr. Kristallogr. 76, 396-430 and 77, 1-22.

Berend L. (1897) Ueber das Lupinin und das Lupinidin der gelben Lupine. Arch. Pharmazie 235, 262-289. See also papers by K. Gerhard, 342-355 and 355-363.

Berg G. (1915) Die Mikroskopische Untersuchung der Erzlagerstätten. Gebr. Bornträger, Berlin, 197 p.

Bergholm C. (1916) Der Temperaturkoeffizient der elektrischen Doppelbrechung in Flüssigkeiten. Ann. Phys. 51, 414-426.

Bergman T. (1762) Anmärkning om Islands krystalls electricitet. Kongl. Sv. Vetensk. Akad. Handl. 23, 62-65. A German translation appeared in 1763.

Bergman T. (1763) Observations in electricity and on a thunder-storm. Phil. Trans. Royal Soc. 53, 97-100, on crystalli Islandicae. See also a letter from E. Delaval in 52.

Bergman T. (1773) Variae crystallorum formae, a spatho orthae. Nova Acta Regiae Soc. Sci. Upsala 1, 150-155. A revised version appeared in his Opuscula Physica et Chemica, vol. 2, Upsala 1780.

Bergman T. (1782) Sciagraphia Regni Mineralis. Lipsiae et Dessaviae, 166 p.

Bergmann-Schaefer (1959) Lehrbuch der Experimentalphysik III, 1. Teil, Wellenoptik. 2nd ed., W. de Gruyter & Co., Berlin, 422 p.

Bernard C. (1853) Nouvelle Fonction du Foie Considéré Comme Organe Producteur de Matière Sucrée Chez l'Homme et les Animaux. Baillière, Paris, 92 p.

Bernard C. (1872) Des phénomènes de la vie communs aux animaux et aux végétaux XIX-XX. Identité du glycogène animal et de l'amidon végétal au point de vue des propriétés physiques. Rev. Sci. 2 (1. sem.), 443-445.

Bernard F. (1852) Thèse sur l´absorption de la lumière par les milieux non cristallisés. Ann. Chim. 35, 385-438. Description of a photometer with four Nicol prisms.

Bernard F. (1853) Note sur la description et l´emploi d´un nouveau photomètre. Comptes Rendus Acad. Sci. Fr. 36, 728-731, also British Assoc. Report 24, pt. ii, 4-5.

Bernard F. (1854) Mémoire sur la polarisation de l´atmosphère. Comptes Rendus Acad. Sci. Fr. 39, 775-779. See also British Assoc. Report 24, pt. ii, 5-6, 1854.

Bernard F. (1856) Note sur la description et la théorie d'un nouveau cyanomètre. Comptes Rendus Acad. Sci. Fr. 43, 982-985.

Bernard F. (1864) Mémoire sur la détermination des longueurs d'onde des raies du spectre solaire, au moyen des bandes d'interférence. Comptes Rendus Acad. Sci. Fr. 58, 1153-1155.

Bernauer F. (1930, 1935) Ein neuer Weg zur Herstellung von Polarisatoren. Fortschr. Mineral. 14, 227-228. Continued in 19, p. 22. On polarizers employing Christiansen dispersive filters. British patent no. 490778 was granted in 1938.

Bernhardi J.J. (1807) Beobachtungen über die doppelte Strahlenbrechung einiger Körper, nebst einigen Gedanken über die allgemeine Theorie derselben. Gehlen´s J. Chem. Phys. Mineral. 4, 230-257. More on calcite etc. in 6, 140-147, 1808 and 8, 152-162, 360-423, 623-662, 1809. Mentions optical axis and other important concepts.

Bernhardi J.J. (1808a) Darstellung einer neuen Methode, Krystalle zu beschreiben. Gehlen´s J. Chem. Phys. Mineral. 5, 157-198, 492-564, 625-654.

Bernhardi J.J. (1808b) Beobachtungen über die Textur des Kalkspaths. Gehlen's J. Chem. Phys. Mineral. 6, 140-147.

Bernoulli A.L. (1909) Eine neue Methode zur Bestimmung der Dispersion von Metallen. Ann. Phys. 29, 585-604.

Berthelot M. (1853) Mémoire sur les diverses essences de térebenthine. Ann. Chim. 40, 5-41. More in J. Pharm. 28, 450-455, 1855.

Berthelot M. (1856) Sur quelques matières sucrées. Ann. Chim. 46, 66-89.

Berthelot M. (1859a) Nouvelles recherches sur les corps analogues au sucre de canne. Ann. Chim. 55, 269-296. About tréhalose, mélézitose and other new sugars.

Berthelot M. (1859b) Sur plusieurs alcools nouveaux. Ann. Chim. 56, 51-98.

Berthelot M. (1860) Sur la fermentation glucosique du sucre de canne. Comptes Rendus Acad. Sci. Fr. 50, 980-984.

Berthelot M. and -. de Luca (1859) Recherches sur le sucre formé par la matière glycogène hepatique. Comptes Rendus Acad. Sci. Fr. 49, 213-214.

Berthollet C.L., -. Chaptal and J.B. Biot (1813) Sur un mémoire de M. Bérard, relatif aux propriétés physiques et chimiques des divers rayons qui composent la lumière solaire. Ann. Chim. 85, 309-325. Also in Ann. Phys. 46, 376-391. See Bérard.

Bertin A. (1848) Sur la polarisation circulaire magnétique. Ann. Chim. 23, 5-32, also C.R. 26, 216- 217. Additional material in C.R. 28, 500-501, 1849.

Bertin A. (1859) Sur les franges que présente, dans la pince à tourmalines, un spath perpendiculaire placé entre deux micas d´un quart d´onde. Ann. Chim. 57, 257-290, extract in Comptes Rendus Acad. Sci. Fr. 48, 458-459.

Bertin A. (1863) Note sur le microscope polarisant de Norremberg. Ann. Chim. 69, 87-96. This microscope used a glass plate as polariser and a Nicol prism as analyser.

Bertin A. (1866) Sur la constitution de la glace glaciare. Comptes Rendus Acad. Sci. Fr. 63, 346-351. More in Ann. Chim. 13, 283-288, 1878.

Bertin A. (1870) Revue des travaux de physique publiés à l´étranger. IV. Optique. Ann. Chim. 20, 207-227. New aspects of e.g. microscopes and polarimeters.

Bertin A. (1875) Notice sur la projection des expériences de polarisation. J. Phys. 4, 71-84 and 111-120.

Bertin A. (1879) Mémoire sur les couleurs des lames cristallisées dans la lumière polarisée elliptiquement. Ann. Chim. 18, 495-559, transl. in Zeitschr. Krystallogr. 5, 36-80, 1881.

Bertin A. (1884) Mémoire sur les franges des lames cristallisées uniaxes simples ou combinées. Ann. Chim. 2, 485-511.

Bertram J. and H. Walbaum (1894) Über Isoborneol. J. Prakt. Chem. 49, 1-15. Über das Vorkommen von Camphen in ätherischen Oelen, 15-19.

Bertrand E. (1878) De l´application du microscope à l´étude de la minéralogie. Bull. Soc. Minéral. Fr. 1, 22-24, 96-97. More in 3, 93-96, 1880, 4, 87-89, 1881 and 8, 29-31, 1885.

Bertrand E. (1880) Nouveau minéral des environs de Nantes. Bull. Soc. Minéral. Fr. 3, 96-100. Contains a description of one of the earliest petrographic microscopes.

Bertrand E. (1884a,b) Sur un nouveau prisme polarisateur. Comptes Rendus Acad. Sci. Fr. 99, 538-540. Sur différents prismes polarisateurs. Bull. Soc. Minéral. Fr. 7, 339-345. See also a note by S.P. Thompson in Nature 41, 574, 1890.

Bertrand G. (1898) Action de la bactérie du sorbose sur les alcools plurivalents. Bull. Soc. Chim. 19, 347-349, and more 947-948, 999-1005.

Bertrand G. (1900) Sur l'oxydation de l'érythrite du sorbose. Production de deux nouveaux sucres: le d-érythrulose et la d-érythrite. Bull. Soc. Chim. 23, 681-686.

Bertrand G. (1904) Étude biochimique de la bactérie du sorbose. Ann. Chim. 3, 181-288.

Beth R.A. (1936) Mechanical detection and measurement of the angular momentum of light. Phys. Rev. 50, 115-125.

Betz W. (1905) Eine Methode zur Bestimmung der Dicke und optischen Konstanten durchsichtiger Metallschichten. Ann. Phys. 18, 590-605.

Bezold W. v. (1876) Eine neue Methode der Farbenmischung. Ann. Phys. 158, 606-612.

Bianchi E. (1915) Primo saggio sull’estinzione a Roma. Mem. Soc. Spettrosc. Ital. 4, 120-125.

Biedermann W. (1914) Physiologie der Stütz- und Skelettsubstanzen. Chapter in Handbuch der Vergleichenden Physiologie, ed. H. Winterstein, 3(1), 319-1188.

Bigelow W.D. and K.P. McElroy (1893) The estimation of sugars in condensed milk. J. Am. Chem. Soc. 15, 668-695.

Billet F. (1858-59) Traité d’Optique Physique I-II. Mallet-Bachelier, Paris, 540+640 p. Both volumes deal at length with double refraction and polarized light.

Billet F. (1859) Sur une nouvelle méthode proposée à verifier les lois qui regissent la réfraction du rayon extraordinaire dans le spath d´Islande. Ann. Chim. 55, 250-268. Extract in C.R. 41, 1855. Similar studies were made by Pichot, C.R. 52, 356-358, 1861.

Billet F. (1862) Mémoire sur les demi-lentilles d’interférences. Ann. Chim. 64, 385-418.

Bills C.E. and E.M. Honeywell (1928) Antiricketic substances. VIII. Studies on highly purified ergosterol and its esters. J. Biol. Chem. 80, 15-23.

Biot J.B. (1812a) Mémoire sur de nouveaux rapports qui existent entre la réflexion et la polarisation de la lumière par les corps cristallisés. Mém. de l’Institut 12 (pt. 1), 135-280. Reprinted in a book in 1814, along with Biot 1812b and a 78-p. introduction.

Biot J.B. (1812b) Sur un nouveau genre d´oscillation que les molécules de la lumière éprouvent en traversant certains cristaux. Mém. de l’Institut 13, 1-371. Biot returned to the subject in Mémoire sur la polarisation lamellaire, Mém. Acad. Sci. 18, 539-725, 1842.

Biot J.B. (1814) Découverte d´une différence physique dans la nature des forces polarisantes de certains cristaux. Bull. Soc. Philom. 1814, 175-176.

Biot J.B. (1815a) Phénomènes de polarisation successive observées dans les fluides homogènes. Bull. Soc. Philom. 1815, 190-192.

Biot J.B. (1815b) Examen comparé de l´intensité d´action que la force répulsive extraordinaire du spath d´Islande exerce sur les molécules lumineuses de diverses couleurs. Ann. Chim. 94, 281-295. Also in Mém. Soc. Arcueil 3, 371-384, 1817.

Biot J.B. (1815c) Expériences sur les larmes bataviques. Bull. Soc. Philom. 1815, 122-144.

Biot J.B. (1815d) Sur un mode particulier de polarisation qui s’observe dans la tourmaline. Ann. Chim. 94, 191-199.

Biot J.B. (1816a) Nouvelles expériences sur le développement des forces polarisantes pa la compression, dans tous les sens des cristaux. Ann. Chim. 3, 386-394.

Biot J.B. (1816b) Construction d’un colorigrade. Bull. Soc. Philom. 1816, 144-152. More in 1818, 90-92 and in Ann. Chim. 4, 91-101, 1817 with comments by F. Arago.

Biot J.B. (1816c) Traité de Physique Expérimentale et Mathématique III, 514 p. and IV, 780 p. Deterville, Paris.

Biot J.B. (1818a) Sur l´utilité des lois de la polarisation de la lumière, pour reconnaître l´état de cristallisation et de combinaison, dans un grand nombre de cas où le système cristallin n´est pas immédiatement observable. Mém. Acad. Sci. 1, 275-346.

Biot J.B. (1818b) Mémoire sur les lois générales de la double réfraction et de la polarisation, dans les corps regulièrement cristallisées. Mém. Acad. Sci. 3, 177-384.

Biot J.B. (1818c) Sur les rotations que certaines substances impriment aux axes de polarisation des rayons lumineux. Mém. Acad. Sci. 2, 41-136. Biot later studied the optical activity of quartz in more detail, in Mémoire sur les phénomènes rotatoires opérés dans le cristal de roche. Mém. Acad. Sci. 20, 221-442, 1849.

Biot J.B. (1819) Sur une nouvelle propriété physique qu’acquièrent les lames de verre quand elles exécutent des vibrations longitudinales. Bull. Soc. Philom. 1819, 174-178.

Biot J.B. (1833) Sur un caractère optique, à l´aide duquel on reconnait immédiatement les sucs végétaux qui peuvent donner du sucre analogue au sucre du canne, et ceux qui ne peuvent donner que du sucre semblable au sucre du raisin. Ann. Chim. 52, 58-72.

Biot J.B. (1835) Mémoire sur la polarisation circulaire et sur ses applications à la chimie organique. Mém. Acad. Sci. 13, 39-175. Read in the Academy 1832.

Biot J.B. (1837) [Comments appended to a report on a memoir by A. Payen]. Comptes Rendus Acad. Sci. Fr. 5, 905. More observations on starch grains: 18, 795-797, 1844.

Biot J.B. (1838) Méthodes mathématiques et expérimentales, pour discerner les mélanges et les combinaisons définies ou non définies qui agissent sur la lumière polarisée; suivis d´applications aux combinaisons de l´acide tartrique avec l´eau, l´alcool, et l´esprit de bois. Mém. Acad. Sci. 15, 93-279, extract in C.R. 2, 53-61, 1836. Mémoire sur plusieurs points fondamentaux de mécanique chimique. 16, 228-396.

Biot J.B. (1840a) Sur la construction des appareils destinés à observer le pouvoir rotatoire des liquides. Ann. Chim. 74, 401-430, also C.R. 11, 413-432.

Biot J.B. (1840b) Sur l´utilité que pourraient offrir les caractères optiques dans l´exploitation des sucreries et des raffineries. Comptes Rendus Acad. Sci. Fr. 10, 264-266.

Biot J.B. (1840c) Sur l´emploi des caractères optiques, comme diagnostic immédiat du diabète sucré. Comptes Rendus Acad. Sci. Fr. 11, 1028-1035.

Biot J.B. (1843a) Sur l'application des propriétés optiques à l'analyse quantitative des mélanges liquides ou solides, dans lesquels le sucre de canne cristallisable est associé à des sucres incristallisables. Comptes Rendus Acad. Sci. Fr. 16, 619-639.

Biot J.B. (1843b) Note sur un travail de M. Bouchardat, relatif aux alcalis végétaux. Comptes Rendus Acad. Sci. Fr. 17, 721-724.

Biot J.B. (1844) Sur l'emploi de la lumière polarisée pour étudier diverses questions de mécanique chimique. Ann. Chim. 10, 5-53, 175-196, 307-327, 385-402 and 11, 82-112.

Biot J.B. (1845a,b,c) Sur un moyens d´observation que l´on peut employer, pour la mesure des pouvoirs rotatoires. Comptes Rendus Acad. Sci. Fr. 20, 1747-1759. Sur les propriétés optiques des appareils à deux rotations. 21, 453-473. Sur une modification de l'appareil de polarisation, employée en Allemagne pour les usages pratiques. 21, 539-545.

Biot J.B. (1845d) Instructions Pratiques sur l'Observation et la Mesure des Propriétés Optiques Appelées Rotatoires. J.-B. Baillière, Paris, 47 p.

Biot J.B. (1846) Sur un appareil construit par M. Ruhmkorff, pour faciliter l'exhibition des phénomènes optiques produits par les corps transparents, lorsqu'ils sont placés entre les pôles contraires d'un aimant d'une grande puissance. Ann. Chim. 18, 318-324.

Biot J.B. (1848) Sur l´utilité d´une précaution hygiénique trop peu employée. Comptes Rendus Acad. Sci. Fr. 27, 617-621. On diabetes, see also a note by -. Lespiau in 26, 305-306.

Biot J.B. and M. Melloni (1836) Sur la polarisation des rayons calorifiques par rotation progressive. Comptes Rendus Acad. Sci. Fr. 2, 194-199.

Biot J.B. and J. Persoz (1833) Mémoire sur les modifications que la fécule et la gomme subissent sous l'influence des acides. Ann. Chim. 52, 72-90.

Bird G. (1853) Remarks on the preparation of the polypidoms of zoophytes for microscopical examination, with a notice of the phenomena they exhibit with polarized light. Quart. J. Microsc. Soc. 1, 85-90.

Birge R.T. (1941) The general physical constants as of August 1941 with details on the velocity of light only. Repts. Progr. Phys. 8, 90-134, also Revs. Mod. Phys. 13, 233-239.

Björnståhl Y. (1918) Untersuchungen über anisotrope Flüssigkeiten. Ann. Phys. 56, 161-207.

Black O.F. (1908) The detection and quantitative determination of β-oxybutyric acid in the urine. J. Biol. Chem. 5, 207-210.

Blake J.C. (1916) On the digestibility of bread. I. J. Am. Chem. Soc. 38, 1245-1260. Continued in 39, 315-320, 1917 and 40, 623-636, 1918.

Blanc M. le and K. Novotný (1906) Über die Kaustizierung von Natriumkarbonat und Kaliumkarbonat mit Kalk. Zeitschr. Anorg. Chemie 51, 181-201.

Blazek M.C. (1976) Iceland Spar in New Mexico. Earth Sci. 29, 287-288.

Blondel A. (1920) Sur une méthode pour la mesure de la transparence atmosphèrique. Comptes Rendus Acad. Sci. Fr. 170, 93-97.

Blondlot R. (1888) Sur la double réfraction diélectrique; simultanéité des phénomènes électrique et optique. Comptes Rendus Acad. Sci. Fr. 106, 349-352.

Boas H. (1899) Ein Polarisationsphotometer zur Messung der Contrastintensität der Röntgenstrahlen. Verh. Deutsch. Phys. Gesellsch. 1, 242-244.

Boeck C. (1839) Bemærkninger, oplyste ved Afbildninger, angaaende Anvendelsen af polariseret Lys ved mikroskopiske Undersögelser af organiske Legemer. Förhandl. Skandin. Naturf. Möte i Götheborg, 107-112. More in the 1840 Förh., p. 303-4.

Boehm G. and R. Signer (1931) Über hochpolymere Verbindungen, 58. Mitteilung. Über die Strömungsdoppelbrechung von Eiweisslösungen. Helv. Chim. Acta 14, 1370-1403.

Boeke H.E. (1912) Die Schmelzerscheinungen und die umkehrbare Umwandlung des Calciumcarbonats. N. Jahrb. Mineral. 1912(1), 91-121.

Boeke H.E. (1915) Grundlagen der Physikalisch-chemischen Petrographie. Gebr. Bornträger, Berlin, 428 p.

Boffey H. and D.A. Derrett-Smith (1931) A new lustre-meter and spectrophotometer. J. Sci. Instr. 8, 356-360, based on H. Wanner's pyrometer from 1902.

Bohn C. (1874) Photometrische Untersuchungen. Ann. Phys. Erg.-bd. 6, 386-416.

Bohr N. (1913) On the constitution of atoms and molecules. Phil. Mag. 26, 1-25.

Bohr N. (1922) The effect of electric and magnetic fields on spectral lines. Proc. Phys. Soc. 35, 275-302.

Bollman V.L. and J.W.M. DuMond (1938) Further tests of the validity of X-ray crystal methods of determining e. Phys. Rev. 54, 1005-1010. Uses calcite.

Boltzmann L. (1874) Ueber den Zusammenhang zwischen der Drehung der Polarisationsebene und der Wellenlänge der verschiedenen Farben. Ann. Phys. Jubelbd., 128-134.

Bömer A. (1908) Über die Beurteilung und den Nachweis der wiederaufgefrischten Butter. Zeitschr. Unters. Nahr.- Genussm. 16, 27-40.

Bondzynski S. and V. Humnicki (1896-97) Ueber das Schicksal des Cholesterins im thierischen Organismus. Zeitschr. Physiol. Chemie 22, 396-410.

Bonney T.G. (1892) The microscope's contributions to the earth´s physical history. Nature 46, 180-184.

Borchardt B. (1913) Das Arons'sche Chromoskop. Naturwissensch. 1, 949-953.

Borel A. (1903) Sur la polarisation rotatoire magnétique du quartz. Arch. Sci. Phys. Nat. 16, 24-49, 157-171.

Born M. (senior, 1887) Beiträge zur Bestimmung der Lichtbrechungsverhältnisse doppeltbrechender Krystalle durch Prismenbeobachtungen. N. Jahrb. Mineral. Beilageb. 5, 1-51. Calcite from Germany and elsewhere.

Born M. (1915) Über die natürliche optische Aktivität von Flüssigkeiten und Gasen. Phys. Zeitschr. 16, 251-258. More in Ann. Phys. 55, 177-240, 1918.

Born M. (1933) Optik. Springer, Berlin, 591 p. Reissued in 1965.

Born M. (1935) On the theory of optical activity, Proc. Royal Soc. A150, 84-105.

Born M. and E. Wolf (1999) Principles of Optics, 7th ed. Cambridge Univ. Press, Cambridge, 952 p. First published in 1959.

Bornträger A. (1892) Saures weinsaures Kalium als Urtitersubstanz für die Acidimetrie und Alkalimetrie. Zeitschr. Anal. Chemie 31, 43-57.

Bornträger A. (1898) Ueber die Bestimmung des Zuckers und über die polarimetrischen Untersuchungen bei Süssweinen. Zeitschr. Anal. Chemie 37, 145-172.

Borodin J. (1883) Über krystallinische Nebenpigmente des Chlorophylls. Bull. Acad. Impér. St.-Pétersb. 28, 328-350. See also Botanische Zeitung 40, 608- 610, 1882.

Borrmann G. (1950) Die Absorption von Röntgenstrahlen im Fall der Interferenz. Zeitschr. Phys. 127, 297-333. See also his note in Naturwissensch. 38, 330, 1951.

Borrmann G. (1988) Aus Kossels Laboratorium, Danzig 1932-38. Naturwissensch. 75, 399-404.

Borrmann G., G. Hildebrandt and H. Wagner (1955) Röntgenstrahl-Fächer im Kalkspat. Zeitschr. Phys. 142, 406-414.

Bosanquet R.H.M. (1876) On a new form of polariscope, and its application to the observation of the sky. Phil. Mag. 2, 20-28. Improvement on Savart’s polariscope.

Bouasse H. (1925a) Optique Cristalline. Double Réfraction. Polarisation Rectiligne et Elliptique. Delagrave, Paris, 482 p.

Bouasse H. (1925b) Optique Cristalline. Polarisation Rotatoire. États Mésomorphes. Delagrave, Paris, 398 p.

Bouchardat A. (1841) Nouvelles recherches sur le diabète sucré ou glucosurie. Comptes Rendus Acad. Sci. Fr. 13, 942-952.

Bouchardat A. (1842) Sur la composition immédiate de la fibrine; sur le gluten, l´albumine, le caséum. Comptes Rendus Acad. Sci. Fr. 14, 962-967.

Bouchardat A. (1843, 1844) Sur les propriétés optiques des alcalis végétaux. Ann. Chim. 9, 213-246. Sur les propriétés optiques de la salicine, la phloridzine et du cnisin. Comptes Rendus Acad. Sci. Fr. 18, 298-302. Sur les propriétés optiques de l´amygdaline, de l´acide amygdalique, etc. 19, 1174-1180.

Bouchardat A. and F. Boudet (1853) Note sur les pouvoirs rotatoires de la quinidine, de la codéine, de la narcéine, de la papavérine et de la picrotoxine. J. Pharm. 23, 288-294.

Bouchardat A. and -. Sandras (1845) Des fonctions du pancréas et de son influence dans la digestion des féculents. Comptes Rendus Acad. Sci. Fr. 20, 1085-1091.

Bouchardat G. and J. Lafont (1886) Action de l’acide acétique sur l’essence de térébentine française et sur divers carbures isomériques. Synthèse de bornéols et de terpilénols. Ann. Chim. 9, 507-534. Their methods were improved by J. Bertram in German patent no. 67255 in 1892, 1 p.

Bouchardat G. and E. Tardy (1895) Sur les alcools dérivés d’un térébenthène droit, l’eucalypthène. Comptes Rendus Acad. Sci. Fr. 120, 1417-1420.

Bouhet C. and R. Lafont (1945) Emploi du nitrate de sodium dans la construction de polariseurs à champ normal. Comptes Rendus Acad. Sci. Fr. 221, 75-76. See also a paper by B.K. Johnson in Proc. Phys. Soc. 55, 291-300, 1943, on crystal growing.

Bouhet C. and R. Lafont (1949) Nouveaux polariseurs à champ normal. Revue d’Optique 28, 490-493.

Bournon J.-L. Comte de (1808) Traité Complet de la Chaux Carbonatée et de l´Arragonite I-III. W. Phillips, London, 349 + 411 + 19 p. and 72 plates.

Bourquelot E. (1886) Sur la préparation du galactose. J. Pharm. 13, 51-54.

Bourquelot E. (1907a,b) Ueber den Nachweis des Rohrzuckers in den Pflanzen mit Hilfe von Invertin. Arch. Pharmazie 245, 164-171. Ueber den Nachweis der Glykoside in den Pflanzen mit Hilfe von Emulsin. 172-180.

Bourquelot E. (1920) Synthèse biochimique des disaccharides: glucobioses, galactobioses. Ann. Chim. 13, 5-44.

Bourquelot E. and H. Hérissey (1902) Recherches sur le gentianose. Ann. Chim. 27, 397-432. See also Comptes Rendus 135, 290-292, 399-401.

Bourquelot E. and M. Bridel (1913) Synthèse des glucosides d'alcools à l'aide de l'émulsine et réversibilité des actions fermentaires. Ann. Chim. 29, 145-218.

Bourquelot E., H. Hérissey and M. Bridel (1913a) Synthèse biochimique de glucosides d'alcools (glucosides α) à l'aide d'un ferment (glucosidase α) contenu dans la levure de bière basse sèchée à l'air: éthylglucoside α. Comptes Rendus Acad. Sci. Fr. 156, 168-170. More p. 330-332, 491-493 and 1493-1495.

Bourquelot E., H. Hérissey and J. Coirre (1913b) Synthèse biochimique d'un sucre du groupe des hexobioses, le gentiobiose. Comptes Rendus Acad. Sci. Fr. 157, 732-734.

Boussinesq J. (1867) Théorie nouvelle des ondes lumineuses. Comptes Rendus Acad. Sci. Fr. 65, 235-239. More in Liouville J. Mathém. 13, 209-241, 313-339, 340-371, 1868.

Boussinesq J. (1903) Théorie Analytique de la Chaleur I-II. Gauthier-Villars, Paris, 333 + 625 p. The major part of vol. II deals with physical optics from a mechanical viewpoint.

Boutaric A. (1918) Contribution à l'étude du pouvoir absorbant de l'atmosphère terrestre. Ann. de Phys. 9, 113-203 and 10, 5-132.

Bovis P. (1928) Les larges bandes d'absorption continue chez les halogènes. Ann. de Phys. 10, 232-344.

Bowen N.L. (1914) The ternary system: diopside-forsterite-silica. Am. J. Sci. 38, 207-264.

Bowen N.L. (1918) The identification of "stones" in glass. J. Am. Ceramic Soc. 1, 594-605.

Bowen N.L. (1926) Properties of ammonium nitrate I-III. J. Phys. Chem. 30, 721-737.

Bowles O. (1920) Iceland spar. U.S. Bureau of Mines Reports of Investigations 2238, 6 p.

Bowles O. (1922) Pure calcium carbonate or "Iceland spar". Rock Products 25(11), 25-27.

Bowman F.H. (1908) The Structure of the Cotton Fibre in its Relation to Technical Applications. Macmillan & Co., London, 470 p. First published in 1881, 211 p.

Boyko V.S., R.I. Garber and A.M. Kosevic (1994) Reversible Crystal Plasticity (translated from Russian). American Institute of Physics, New York, 294 p.

Brace D.B. (1903) A sensitive-strip spectropolariscope. Phil. Mag. 5, 161-170.

Brace D.B. (1904a) A half-shade elliptical polarizer and compensator. Phys. Rev. 18, 70-88. More on errors of measurement in 19, 218-230. See also Szivessy 1921.

Brace D.B. (1904b) On double refraction in matter moving through the aether. Phil. Mag. 7, 317-329. Also in L. Boltzmann Festschrift, 576-584.

Brace D.B. (1905a,b,c) The negative results of second and third order tests of the "aether drift", and possible first order methods. Phil. Mag. 10, 71-80. The aether "drift" and rotatory polarization, 383-396. A repetition of Fizeau's experiment on the change produced by the Earth's motion on the rotation of a refracted ray, 591-599.

Bragg W.H. (1915) X-rays and crystal structure. Phil. Trans. Royal Soc. A215, 253-274.

Bragg W.H. (1927) Tyndall's experiments on magne-crystallic action. Scientific Monthly 25, 65-79.

Bragg W.L. (1913) The structure of some crystals as indicated by their diffraction of X-rays. Proc. Royal Soc. A89, 248-277. Also: Proc. Cambr. Philos. Soc. 17, 43-57.

Bragg W.L. (1914) The analysis of crystals by the X-ray spectrometer. Proc. Royal Soc. A89, 468-489. Includes work on the isomorphous calcite group.

Bragg W.L. (1924) The refractive indices of calcite and aragonite. Proc. Royal Soc. A105, 370-386 (see book by Hartshorne and Stuart 1950, p. 143-149). The influence of atomic arrangement on refractive index, A106, 346-368.

Bragg W.L. and S. Chapman (1924) A theoretical calculation of the rhombohedral angle of crystals of the calcite type. Proc. Royal Soc. A106, 369-377. More by S.C. et al. in A111, 25-56, 1926 and by J.E. Lennard-Jones and B.M. Dent in A113, 673-689, 1927.

Brand K. (1925) Zur Kenntnis der Halochromie bei Triphenylmethan- und Azoverbindungen. J. Prakt. Chemie 109, 1-40.

Branly É. (1882) Dosage de l´hémoglobine dans le sang par les procédés optiques. Ann. Chim. 27, 238-273, abstract in J. Pharm. 7, 144-146, 1883.

Braun F. (1905) Der Hertz'sche Gitterversuch im Gebiete der sichtbaren Strahlung. Ann. Phys. 16, 1-19. Continued in 16, 238-277, 278-28 and 17, 364-366.

Brauns R. (1891) Die Optischen Anomalien der Krystalle. S. Hirzel, Leipzig, 370 p.

Brauns R. (1903a) Das Mineralreich. F. Lehmann, Stuttgart, 440 p.

Brauns R. (1903b) Ein Projectionsapparat für den mineralogischen Unterricht. N. Jahrb. Mineral. 1903(2), 1-10.

Bravais A. (1851) Études cristallographiques. J. École Polytechnique 20, 101-276.

Bravais A. (1855) Description d´un nouveau polariscope, et recherches sur les doubles réfractions peu énergiques. Ann. Chim. 43, 129-149, transl. Ann. Phys. 96, 395-414. Extract in Comptes Rendus Acad. Sci. Fr. 32, 112-116, 1851. Describes the Bravais compensating plate (made of quartz).

Bredig G. and P.S. Fiske (1912) Durch Katalysatoren bewirkte asymmetrische Synthese. Biochem. Zeitschr. 46, 7-23.

Brenni P. (1996) 19th century French Instrument makers XIII. Soleil, Duboscq, and their successors. Bull. Sci. Instrument Soc. no. 51, 7-16.

Bréon R. (1882) Rapport sur une mission en Islande. Arch. Miss. Sci. Litt. 8, 101-118.

Brewster D. (1813a) A Treatise on New Philosophical Instruments for Various Purposes in the Arts and Sciences. J. Murray, London & W. Blackwood, Edinburgh, 442 p.

Brewster D. (1813b) On some properties of light. Phil. Trans. Royal Soc. 103, 101-109.

Brewster D. (1814) Results of some recent experiments on the properties impressed upon light by the action of glass raised to different temperatures, and cooled under different circumstances. Phil. Trans. Royal Soc. 104, 436-439. More in 105, 1-8, 1815.

Brewster D. (1815a) On the laws which regulate the polarisation of light by reflexion from transparent bodies. Phil. Trans. Royal Soc. 105, 125-159.

Brewster D. (1815b) On the multiplication of images, and the colours which accompany them in some specimens of calcareous spar. Phil. Trans. Royal Soc. 105, 270-292.

Brewster D. (1815c) On the effects of simple pressure in producing that species of crystallization which forms two oppositely polarised images, and exhibits the complimentary colours by polarised light. Phil. Trans. Royal Soc. 105, 60-64.

Brewster D. (1816a) On new properties of heat, as exhibited in its propagation along plates of glass. Phil. Trans. Royal Soc. 106, 46-114.

Brewster D. (1816b) On the communication of the structure of doubly-refracting crystals to glass, muriate of soda, fluor spar and other substances by mechanical compression and dilatation. Phil. Trans. Royal Soc. 106, 157-178.

Brewster D. (1816c) On the structure of the crystalline lens in fishes and quadrupeds, as ascertained by its action on polarised light. Phil. Trans. Royal Soc. 106, 311-317. More on that subject in 127, 253-258, 1837.

Brewster D. (1818a) On a new optical and mineralogical property of calcareous spar. Trans. Royal Soc. Edinb. 8, 165-169. Color phenomena.

Brewster D. (1818b) On the laws of polarisation and double refraction in regularly crystallized bodies. Phil. Trans. Royal Soc. 108, 199-273.

Brewster D. (1819) On the action of crystallized surfaces upon light. Phil. Trans. Royal Soc. 109, 145-160. More on Iceland spar in Trans. Royal Soc. Edinb. 24, 233-246, 1866.

Brewster D. (1819-20) On the connection between the primitive forms of crystals, and the number of their axes of double refraction. Mem. Wernerian Nat. Hist. Soc. 3, 50-74 and 337-350, translation in Ann. Phys. 69, 1-29, 1821.

Brewster D. (1820) On the absorption of polarised light in doubly refracting crystals. Edinb. Philos. J. 2, 341-348.

Brewster D. (1822-23) Account of the experiments of Mr. Benjamin Martin. Edinb. Philos. J. 8, 150-160, 245-257. Reissue of pamphlets by B. Martin of 1774, plus preface.

Brewster D. (1823) Historical account of discoveries respecting the double refraction and polarisation of light. Sect. IV.- Account of the experiments of Abbé Hauy. Edinb. Philos. J. 9, 148-152.

Brewster D. (1829a) On the double refraction and polarisation of light. A chapter in the Library of Useful Knowledge (Natural Philosophy I). Baldwin & Cradock, London, 64 p.

[Brewster D.] (1829b) Account of two remarkable cases of insensibility in the eye to particular colours. Edinb. J. Sci. 10, 153-159.

Brewster D. (1830a) Microscope. An entry in vol. 14 of the Edinburgh Encyclopaedia, 215-232. W. Blackwood & J. Waugh, Edinburgh.

Brewster D. (1830b) On the phenomena and laws of elliptic polarization, as exhibited in the action of metals upon light. Phil. Trans. Royal Soc. 120, 287-326.

Brewster D. (1831) A Treatise on Optics. A volume in D. Lardner's Cabinet Cyclopaedia. Longman, Rees, Orme, Brown, Green and Taylor, London, 383 p.

Brewster D.B. (1833) Observations on the absorption of specific rays, in reference to the undulatory theory of light. Phil. Mag. 2, 360-363.

Brewster D. (1841) On the compensations of polarised light, with the description of a polarimeter for measuring degrees of polarisation. Proc. Royal Soc. 4, 306-307, more details in Trans. Irish Acad. 19, 377-392, 1843.

Brewster D. (1842) On the existence of a new neutral point and two secondary neutral points. British Assoc. Report 12, pt. ii, 13. See also correspondence in C.R. 20, 801-804, 1845.

Brewster D. (1843) Notice of an experiment on the ordinary refraction of Iceland Spar. British Assoc. Report 13, pt. ii, 7.

Brewster D. (1848a,b) On the distinctness of vision produced in certain cases by the use of the polarizing apparatus in microscopes. Phil. Mag. 32, 161-165. On the phenomenon of luminous rings in calcareous spar and beryl, as produced by tubular cavities containing the two new fluids. 33, 489-493.

Brewster D. (1860) Observations sur un point de l´histoire de l´optique. Comptes Rendus Acad. Sci. Fr. 51, 425-429. Relates to the discovery of the different interference figures seen in plates of uni- and biaxial crystals in convergent linearly polarized light.

Brezina A. (1866) Ueber eine neue Modification des Kobell'schen Stauroskops und des Nörremberg'schen Polarisationsmikroskops. Ann. Phys. 128, 446-452 and 130, 141-143.

Brezina A. (1880) Ueber künstliche Kalkspathzwillinge. Zeitschr. Kristallogr. 4, 518-519, extract from Verhandl. der Geol. Reichsanstalt in Wien.

Bridges T.J. and J.W. Kluwer (1965) Dichroic calcite polarizers for the infrared. Applied Optics 4, 1121-1125.

Brill O. (1905) Über die Dissoziation der Karbonate der Erdalkalien und des Magnesiumkarbonats. Zeitschr. Anorg. Chemie 45, 277-292.

Brill R. (1962) Von optischen Arbeiten M. v. Laues im sichtbaren und besonders im Röntgen-Gebiet. Naturwissensch. 49, 25-27.

Brillouin M. (1911) Polymorphisme et orientations moléculaires. Comptes Rendus Acad. Sci. Fr. 153, 240-242.

Briot C. (1867) Sur la réflexion et la réfraction cristallines. Comptes Rendus Acad. Sci. Fr. 64, 956-960. See also his papers in 49, 888-892, 1859 and 63, 1112-1116, 1866.

Broadbent S.R. and A.J. Shaw (1955) Reflectance of coal. Fuel 34, 385-403.

Broch O.J. (1842) Om lovene for lysets forplantelse i isophane og eenaxig krystaliserede media.

Skandin. Naturf. Forhandl. 3, 283-302. More in Nyt Magazin f. Naturvidensk. 5, 49-88, 89-170, 215-252, 1848.

Broch O.J. (1846) Besondere Gesetze der Wellenbewegung V.2. Dove´s Repertorium 7, 113-119. Extract: Détermination du pouvoir rotatoire moléculaire du quartz, par une méthode applicable à tous les phénomènes chromatiques. Ann. Chim. 34, 119-121, 1852.

Brodhun E. (1888) Ueber das Leukoskop. Ann. Phys. 34, 897-918. Nicol-prism device.

Brodhun E. (1913) Die Physikalisch-Technische Reichsanstalt. Fünfundzwanzig Jahre ihrer Tätigkeit. 4. Optik. Naturwissensch. 1, 321-325.

Brodsky G. (1919) A new polariser. Nature 103, 97 and Proc. Phys. Soc. 31, 230. Also British patent no. 121906 and U.S. patent no. 1,358,413 granted 1920.

Brotherus H.v. (1912) Experimentelle und theoretische Untersuchungen über die Spektrallinien D_1 und D_2. Ann. Phys. 38, 397-433.

Brougham H. (1796) Experiments on the inflection, reflection and colours of light. Phil. Trans. Royal Soc. 86, 227-277.

Brougham H. (1797) Further experiments and observations on the affections and properties of light. Phil. Trans. Royal Soc. 87, 196-213.

Brougham H. (1803a) Anonymous criticism of papers by T. Young in Phil. Trans. 1802, The Bakerian lecture on light and colours, and An account of some cases of the production of colors. Edinb. Rev. 1, 450-460. Continued in 5, 97-103, 1804.

Brougham H. (1803b) Anonymous review of W.H. Wollaston's papers in Phil. Trans. 1802, A method of examining… and On the oblique refraction of Iceland crystal, Edinb. Rev. 2, 97-99.

Brown A.J. (1902) Enzyme action. J. Chem. Soc. 81, 373-388. On kinetics.

Brown F.C. (1914) The crystal forms of metallic selenium and some of their physical properties. Phys. Rev. 4, 85-98. More e.g. 507-516 and in 5, 404-411, 1915.

Brown F.L. and J.W. Beams jr. (1925) The order of appearance of certain lines in the spark spectra of cadmium and magnesium. J. Opt. Soc. Am. 11, 11-15.

Brown H.T. and J. Heron (1879) Contributions to the history of starch and its transformations. J. Chem. Soc. Trans. 35, 596-654. Translation in Liebig's Ann. 199.

Brown H.T. and J. Heron (1880) Ueber die hydrolytischen Wirkungen des Pankreas und des Dünndarms. Liebig's Ann. Chemie 204, 228-251.

Brown H.T. and G.H. Morris (1885) On the non-crystallisable products of the action of diastase upon starch. J. Chem. Soc. Trans. 47, 527-570. More in 55, 449-461, 1889.

Brown H.T. and G.H. Morris (1893) A contribution to the chemistry and physiology of foliage leaves. J. Chem. Soc. Trans. 63, 604-677.

Brown H.T. and S. Pickering (1897) Thermal phenomena attending the change in rotatory power of freshly prepared solutions of certain carbohydrates, with some remarks on the cause of multirotation. J. Chem. Soc. Trans. 71, 756-783, more 783-795.

Brown H.T., G.H. Morris and J.H. Millar (1897) The specific rotation of maltose and soluble-starch. J. Chem. Soc. Trans. 71, 109-114, more 115-123 and 75, 315-337, 1899.

Browne C.A. (1912) Handbook of Sugar Analysis, 1st ed., corrected. Wiley, New York, 787 + 101 + lxxxi p.

Browne C.A. (1918) The polariscope situation and the need of an international saccharimetric scale. J. Ind. Eng. Chem. 10, 916-918, see also Stanley 1919.

Brownmiller L.T. and R.H. Bogue (1931) System $CaO\text{-}Na_2O\text{-}Al_2O_3$. J. Res. Bur. Std. 8, 289-307.

Brücke E. (1848) Ueber die Aufeinanderfolge der Farben in den Newton´schen Ringen. Ann. Phys. 74, 582-586. More on interference of polarized light in 88, 363-385, 1853.

Brücke E. (1858) Untersuchungen über den Bau der Muskelfasern mit Hülfe des polarisirten Lichtes. Denkschr. Akad. Wiss. Wien 15, 69-84.

Brücke E. (1866) Die Physiologie der Farben. S. Hirzel, Leipzig, 298 p.

Bruhat G. (1915) Recherches expérimentales et théoriques sur les corps possédant une dispersion anormale du pouvoir rotatoire. Ann. de Phys. 3, 232-282, 417-489.

Bruhat G. (1920) Recherches sur la dispersion rotatoire anormale. Ann. de Phys. 13, 25-48.

Bruhat G. (1930) Traité de Polarimétrie. Revue d´Optique, Paris, 447 p. Major review.

Bruhat G. (1942) Cours d' Optique, 3rd ed. Masson et Cie, Paris, 776 p.

Bruhat G. and P. Chatelain (1933) Essais de polarimétrie photoélectrique. Revue d´Optique 12, 1-20. More by G.B. and A. Guinier on p. 396-416.

Bruhat G. and M. Pauthenier (1927) Le problème de l'analyse d'une vibration rectiligne ultraviolette. Revue d'Optique 6, 163-184. Extract in C.R. 182, 888-891, 1926.

Bruhl-Metzger H. (1914) Une théorie de la double réfraction chez Buffon. Bull. Soc. Fr. Minéral. 37, 162-176.

Brunck O. (1906) Zur gewichtsanalytischen Bestimmung des Kalziums. Zeitschr. Anal. Chemie 45, 77-87.

Brunhes B. (1893) Étude expérimentale sur la réflexion cristalline interne. Ann. Chim. 30, 98-141, 145-245.

Brunhes B. (1900) Une méthode de mesure de la vitesse des rayons Röntgen. Comptes Rendus Acad. Sci. Fr. 130, 127-130. See also Rev. Gén. Sci. 12, 344-345, 1901.

Bruyn C.A. Lobry de (1895) Derivé ammoniacal de la d-glucose. Rec. Trav. Chim. Pays-Bas 14, 98-105. More by him and F.H. v. Leent on other sugars p. 134-149.

Bruyn C.A. Lobry de and W. A. van Ekenstein (1895) Einwirkung von Alkalien auf Kohlehydrate. Ber. Deutsch. Chem. Gesellsch. 28, 3078-3082. Also in Rec. Trav. Chim. Pays-Bas 14, 156-165, 203-216 with continuation in 15 and 16.

Bryan A.H. (1911) Composition of American commercial glucose and starch sugars. J. Franklin Inst. 172, 337-343.

Bryson A. (1850) Description of new optical instruments. Edinb. New Philos. J. 48, 19-20.

Buchner E. and R.v.d. Heide (1905) Spiegelbildisomerie bei Carbonsäuren des Cyclopropans. Ber. Deutsch. Chem. Gesellsch. 38, 3112-3119.

Bucholz C.F. (1805) Analysen verschiedener Kalkarten. Gehlen's J. Chemie 4, 410-425.

Buchwald J.Z. (1980) Experimental investigations of double refraction from Huygens to Malus. Arch. Hist. Exact Sci. 21, 311-373.

Buchwald J.Z. (1989) The Rise of the Wave Theory of Light. Optical Theory and Experiment in the Early Nineteenth Century. Univ. of Chicago Press, Chicago, 474 p.

Buchwald J.Z. and K. M. Pedersen (1991), see Bartholin 1669.

Budker D., W. Gawlik, D.F. Kimball, S.M. Rochester, V.V. Yaschuk and A. Weis (2002) Resonant nonlinear magneto-optical effects in atoms. Revs. Mod. Phys. 74, 1153-1201.

Buffon G. de (1786) Du spath appelé cristal d'Islande. Chapter in: Histoire Naturelle des Minéraux, vol. 4. Imprimerie Royale, Paris, 113-122.

Buignet H. (1861a) Application de la physique à la solution de quelques problèmes de chimie et de pharmacie. III. Pouvoir rotatoire. J. Pharm. 40, 252-276.

Buignet H. (1861b) Recherches sur la matière sucrée contenue dans les fruits acides; son origine, sa nature et ses transformations. Ann. Chim. 61, 233-308.

Bunsen R.W. (1849) On the colour of water. Edinb. New Philos. J. 47, 95-98. This was investigated further e.g. by W. Spring and by G. Hüfner around 1890.

Bureau of Standards (1914, 1918) Polarimetry. Circular no. 44, 140 p. and 2nd ed. 196 p. Bureau of Standards, Washington D.C.

Burgess G.K. and H. Le Chatelier (1912) The Measurement of High Temperatures, 3rd ed. J. Wiley, New York, 510 p.

Burian R. (1897) Über Sitosterin. Monatsh. Chemie 18, 551-574.

Bürker K. (1911) Prüfung und Eichung des Sahli'schen Hämometers. Pflüger's Arch. Physiol. 142, 273-290.

Buron -. (1844) Prix-courant de la Manufacture d'Instruments d'Optique et de Mathématiques. Paris, 112 p.

Busch F. and C. Jensen (1911) Tatsachen und Theorien der atmosphärischen Polarisation nebst Anleitung zu Beobachtungen verschiedener Art. 5. Beiheft zum Jahrbuch der Hamburgischen Wissenschaftlichen Anstalten 28, 1910, 532 p.

Bütschli O. (1908) Untersuchungen über organische Kalkgebilde, nebst Bemerkungen über organische Kieselgebilde. Abh. Kön. Gesellsch. Wiss. Göttingen 6(3), 177 p.

Butterfield E.E. (1909) Über die Lichtextinktion, das Gasbindungsvermögen und den Eisengehalt des menschlichen Blutfarbstoffs in normalen und krankhaften Zuständen. Zeitschr. Physiol. Chemie 62, 173-225.

Cabannes J. (1915) Sur la diffusion de la lumière par l'air. Comptes Rendus Acad. Sci. Fr. 160, 62-63. Continued in 168, 430-433, 1919.

Cabannes J. (1920) Relation entre le degré de polarisation et l'intensité de la lumière diffusée par les molécules anisotropes. J. Phys. Radium 1, 129-142.

Cabannes J. (1921) Sur la diffusion de la lumière par les molécules des gaz transparents. Ann. de Phys. 15, 5-149. More in J. Phys. Radium 3, 429-442.

Cabannes J. (1922) Polarisation et intensité de la lumière diffusée par les liquides transparents. Comptes Rendus Acad. Sci. Fr. 175, 875-877.

Cabannes J. (1929a) Polarisation of Raman radiations in liquids and crystals. Trans. Faraday Soc. 25, 813-825; on quartz in Comptes Rendus Acad. Sci. Fr. 188, 249-250.

Cabannes J. (1929b) Les radiations secondaires dans la lumière diffusé par le spath calcaire. Comptes Rendus Acad. Fr. 188, 1041-1043. More in 193, 156-158, 1931.

Cabannes J. and J. Granier (1923) Nouvelles recherches expérimentales sur la diffusion de la lumière par les gaz transparents. Polarisation de la lumière diffusée latéralement. J. Phys. Radium 4, 429-450.

Cajori F.A. (1922) The use of iodine in the determination of glucose, fructose, sucrose, and maltose. J. Biol. Chem. 54, 617-627.

Calderón L. (1878) Ueber einige Modificationen des Groth´schen Universalapparats und über eine neue Stauroskopvorrichtung. Zeitschr. Kristallogr. 2, 68-73.

Caldwell R.J. (1906) The hydrolysis of sugars. British Assoc. Report 76, 267-292.

Caldwell R.J. and S.L. Courtauld (1907) The hydrolysis of amygdalin by acids. J. Chem. Soc. Trans. 91, 666-671.

Callier A. (1909) Absorption und Diffusion des Lichtes in der entwickelten photographischen Platte, nach Messungen mit dem Martens'schen Polarisationsphotometer. Zeitschr. Wissensch. Photogr. 7, 257-272.

Camichel C. (1895) Étude expérimentale sur l'absorption de la lumière par les cristaux. Ann. Chim. 5, 433-493.

Camichel C. (1905) Recherches expérimentales sur la fluorescence. Ann. Fac. Sci. Toulouse 7, 417-442. Extract in Comptes Rendus Acad. Sci. Fr. 140, 139-141.

Camichel C. and P. Bayrac (1901) Nouvelle méthode de caractériser les matières colorantes. Ann. Fac. Sci. Toulouse 3, 433-456.

Carion K. Stellwag v. (1853) Über doppelte Brechung und davon abhängige Polarisation des Lichtes im menschlichen Auge. Denkschr. Akad. Wiss. Wien 5(2), 1-72.

Carl P. (1870) Ein einfacher kleiner Polarisationsapparat. Carl's Repertorium 6, 403-404.

Carpenter R.O'B. (1953) Electro-optic sound-on-film modulator. J. Acoust. Soc. Am. 25, 1145-1148.

Carpenter W. (1844) On the microscopic structure of shells. British Assoc. Report 14, 1-24.

Carpenter W.B. (1856, 1868) The Microscope and its Revelations. Blanchard and Lea, Philadelphia, 724 p. 4th edition, J. Churchill & Sons, London, 796 p.

Carus-Wilson C. (1891) The influence of surface loading on the flexure of beams. Phil. Mag. 32, 481-503. Photoelasticity.

Carvallo E. (1890) Influence du terme de dispersion de Briot sur les lois de la double réfraction. Ann. École Normale Sup. 7 (Suppl.), 3-123.

Carvallo E. (1892) Sur la polarisation rotatoire du quartz. Ann. Chim. 26, 113-144.

Carvallo E. (1900) Sur la dispersion exceptionelle du spath d´Islande. J. Phys. 9, 465-479. UV light. For IR see Comptes Rendus Acad. Sci. Fr. 126, 950-953, 1898.

Casamajor P. (1881) Detection of starch sugar syrup mixed with sugar-house molasses. J. Am. Chem. Soc. 3, 87-88.

Cauchy A. (1813) Recherches sur les polyèdres. J. École Polytechnique 9, 68-86.

Cauchy A. (1823) Recherches sur l´équilibre et le mouvement intérieur des corps solides, ou fluides élastiques ou non élastiques. Essay presented to the Academy, extract in Bull. Soc. Philom. 1823, 9-13.

Cauchy A. (1828) Sur l´équilibre et le mouvement d´un système de points matériels sollicités par les forces d´attraction ou de répulsion mutuelle. Exerc. Mathém. 3, 188-212.

Cauchy A. (1831) Mémoire sur la théorie de la lumière. Mém. Acad. Sci. 10, 293-316. Also in 9, 114-116, 1830. Cauchy's first theory on light, later revised.

Cauchy A. (1836) Notes sur l´optique, adressées à M. Libri. Comptes Rendus Acad. Sci. Fr. 2, 341-349.

Cauchy A. (1839a) Mémoire sur la polarisation rectiligne et la double réfraction. Mém. Acad. Sci. 18, 153-216.

Cauchy A. (1839b) Note sur la quantité de la lumière réfléchie sous les diverses incidences par les surfaces des corps opaques et spécialement des métaux. Comptes Rendus Acad. Sci. Fr. 8, 553-561, more on polarization 658-659.

Cauchy A. (1849) Démonstration simple de cette proposition que, dans un rayon de lumière polarisé rectilignement, les vibrations des molecules sont perpendiculaires au plan de polarisation. Comptes Rendus Acad. Sci. Fr. 29, 645.

Cauchy A. (1850a) Mémoire sur la propagation de la lumière dans les milieux isophanes. Comptes Rendus Acad. Sci. Fr. 30, 33-41. Opaque materials, etc.: 465-467.

Cauchy A. (1850b) Sur les rayons réfléchis et réfractés par la surface d´un corps transparent. Comptes Rendus Acad. Sci. Fr. 31, 160-166, 225-232. More later on reflection from crystals, etc.

Central Scientific Company (1909, 1912) Catalogue M of Physical and Chemical Apparatus. Chicago, 392 p. and 515 p.

Ceraski V.K. (1902) [Photometric observations on the Coma Berenices star cluster] Ann. Observ. Moscou 4, 87- , referred to in J.B. Hearnshaw's book The Measurement of Starlight, Cambridge 1996.

Cesaro G. (1889) Note sur la vitesse d´attaque du marbre et du spath d´Islande par quelques acides. Ann. Soc. Géol. Belg. 15, 219-268 and Ann. Chim. 17, 5-36, 37-52.

Cesaro G. (1890) Production mécanique des faces e1 et d1 dans le spath d´Islande. Bull. Soc. Fr. Minéral. 13, 192-199.

Challenger F. and F.S. Kipping (1910) Optically active compounds containing one asymmetric silicon group. J. Chem. Soc. Trans. 97, 755-773.

Challis J. (1847) A theory of luminous rays on the hypothesis of undulations. Trans. Cambr. Philos. Soc. 8, 363-370. On double refraction: 371-378, 524-532, 584-594, 1849.

Challis J. (1863) The theory of double refraction on the undulatory hypothesis of light. Phil. Mag. 26, 466-483. See also 24, 462-474, 1862.

Chamot É.M. (1915, 1921) Elementary Chemical Microscopy. J. Wiley & Sons, New York, 410 p. Second edition, 479 p.
Chandler H.W. (1970) Method of growing crystals. U.S. patents no. 3,489,665, 3 p. and 3,502,556, 4 p. Both filed in 1967.
Chardonnet H. de (1881) Sur l'absorption des rayons ultra-violets par quelques milieux. Comptes Rendus Acad. Sci. Fr. 93, 406-408.
Chardonnet H. de (1883) Pénétration des radiations actiniques dans l'oeil d'homme et des animaux vertébrés. Comptes Rendus Acad. Sci. Fr. 96, 441-444. Continued 509-511.
Charpy G. (1896) Appareils pour l'examen microscopique des corps opaques. Rev. Gén. Sci. 7, 1260-1262.
Chaudun A. (1920) Recherches physico-chimiques sur l'inversion diastasique du saccharose. Ann. Chim. 13, 301-349.
Chaumont L. (1915) Recherches expérimentales sur le phénomène électro-optique de Kerr et sur les méthodes servant à l'étude de la lumière polarisée elliptiquement. Ann. de Phys. 4, 61-206.
Chautard J. (1858) Nouvelles recherches sur les propriétés optiques des différentes espèces de camphre et en particulier sur celles du camphre de matricaire. Mém. Acad. Stanislas (Nancy) 1857, 207-232. See also C.R. 37, 166-167, 1853.
Chautard J. (1863) Nouvelles études sur le camphre gauche de matricaire et sur les huiles essentielles, au point de vue de la production du camphre. J. Pharm. 44, 13-33.
Chauvin -. (1889) Recherches sur la polarisation rotatoire magnétique dans le spath d´Islande. Ann. Fac. Sci. Toulouse 3(J), 49 p. Extracts in Comptes Rendus Acad. Sci. Fr. 108, 1097-1100 and in J. Phys. 9, 5-34, 1890.
Chemnitz J.H. (1799) Mineralogische Bemerkungen. Der Naturforscher 28, 138-153.
Cheshire F.J. (1906-07) Some new projection apparatus. Trans. Opt. Soc. 9, 154-166.
Cheshire F.J. (1923) The President´s Address: The early history of the polariscope and the polarizing microscope. J. Royal Microsc. Soc. 43, 1-18.
Chevalier C. (1839) Des Microscopes et leur Usage. Manuel Complet du Micrographie. Charles Chevalier and Libraire Crochard, Paris, 284 p.
Maison Charles-Chevalier (1860) Catalogue Explicatif et Illustré des Instruments de Physique Expérimentale. Paris, 147 p.
Chevalier S. (1906) Hélioscope polariseur. Bull. Astron. 23, 359-361. This method of attenuating the Sun's image in astronomical equipment was invented by I. Porro, see L'Année Scient. 3(I), 96-97, 1858 and Mon. Not. Royal Astr. Soc. 18, 148-150, 1858.
Maison l'Ingenieur Chevallier (1845) Catalogue et Prix des Instruments d'Optique, de Physique, de Mathématiques, d'Astronomie et de Marine. Paris, 70 p.
Chevallier-Baudrimont (1882) Dictionnaire des Altérations et Falsifications des Substances Alimentaires, Médicamenteuses et Commerciales, avec l'Indication des Moyens de les Reconnaître, 6th ed. Asselin & C^{ie}, Paris, 1501 p.
Chevron L. and S. Droixhe (1890) Sur la matière polarisante du marc de betterave épuisé à l'alcool. Pouvoir rotatoire des matières pectiques. Bull. Acad. Roy. Belg. 19, 207-218.
Chibret P. (1885) [A paper on his chromato-photoptometer] Bull. Mém. Soc. Fr. d'Ophthalmol. (Séance du 20. janvier). See description on p. 44-48 of the 2nd edition of L. Mauthner's book: Farbenlehre, publ. by J.F. Bergmann, Wiesbaden.
Christiansen C. (1884, 1885) Untersuchungen über die Eigenschaften von fein vertheilten Körpern. Ann. Phys. 23, 298-306 and 24, 439-446.
Christie H. (1864-65) Lærebog i Fysik. P.T. Malling, Christiania, 387 + 298 p.
Christoffel E.B. (1877) Ueber die Fortpflanzung von Stössen durch elastische feste Körper. Ann. Matem. Pura Appl. 8, 193-243.

Chwolson O. (1886) Photometrische Untersuchungen über die innere Diffusion des Lichtes. Bull. Acad. Impér. Sci. St.-Pétersb. 31, 213-261.

Claassen H. (1894) Sur les pertes indéterminées dans la fabrication des sucres de betteraves, notamment à la diffusion. Moniteur Scient. 43, 131-133 (from Sucrerie Belge 22). See also a note on a related subject by -. Felcman and -. Herles, p. 134.

Clark E.P. (1921) Preparation of galactose. J. Biol. Chem. 47, 1-2.

Clark E.P. (1922) The structure of fucose. J. Biol. Chem. 54, 65-73.

Clark H.A. (1906) Optical properties of carbon films. Phys. Rev. 23, 422-443.

Clausius R. (1847) Über die Lichtzerstreuung in der Atmosphäre und über die Intensität des durch die Atmosphäre reflektierten Sonnenlichtes. Ann. Phys. 72, 294-314.

Cleary F.J. (1914) Optical glass. J. Am. Soc. Naval Engineers 26, 724-768.

Clebsch A. (1860) Theorie der circularpolarisirenden Medien. Crelle’s J. Reine Angew. Mathem. 57, 319-358.

Clément L. and C. Rivière (1913) L’acétate de cellulose. Fabrication, propriétés et usages. Bull. Soc. Encouragem. 1913 (2. sem.), 53-75.

Clerget T. (1846) Analyse des sucres. Comptes Rendus Acad. Sci. Fr. 23, 256-260. On industrial uses: 16, 1000-1001, 1843.

Clerget T. (1849) Analyse des substances saccharifères au moyen des propriétés optiques de leurs dissolutions et l´évaluation de leur rendement industriel. Ann. Chim. 26, 175-207. Important work on optical activity of sugars.

Clough G.W. (1918) The relationship between the optical rotatory powers and the relative configurations of optically active compounds. J. Chem. Soc. Trans. 113, 526-554.

Coblentz W.W. (1903) Some optical properties of iodine. II. Phys. Rev. 16, 72-93.

Coblentz W.W. and W.B. Emerson (1918) Relative sensibility of the average eye to light of different colors and some practical applications to radiation problems. Bull. Bureau of Standards 14, 167-236.

Coetzee C.B., ed. (1976) Mineral Resources of the Republic of South Africa. 5th edition, a chapter on Iceland spar p. 375 is by A.J.M. Brabers. Handbook 7, Geological Survey, Department of Mines, Pretoria, 462 p.

Coker E.G.(1910) The optical determination of stress. Phil. Mag. 20, 740-751.

Coker E.G. (1912) The application of optical methods to technical problems of stress distribution. Nature 90, 383-386.

Coker E.G. (1916) Polarized light and its applications to engineering. Proc. Royal Inst. 21, 573-599. See Coker and Filon 1931 for various papers by Coker and collaborators.

Coker E.G. (1923) Engineering problems solved by photo-elastic methods. J. Franklin Inst. 196, 433-478.

Coker E.G. and S.P. Thompson (1912) The design and construction of large polariscopes. Engineering 94, 134-135. Also published in Proc. II. Optical Convention, 213-219.

Coker E.G. and L.N.G. Filon (1931) A Treatise on Photo-Elasticity. Cambridge Univ. Press, Cambridge, 720 p. A second edition revised by H.T. Jessop appeared in 1957, and in 1949 Jessop published a book on the same topic with F.C. Harris.

Colin H. (1931). Les Diastases I. Les Hydrolases. G. Doin & Cie, Paris, 319 p.

Collett E. (1993) Polarized Light. M. Dekker, New York, 581 p.

Colson A. (1896) Dosage polarimetrique de l’acide tartrique. Bull. Soc. Chim. 15, 158-162.

Compan P. (1899) Transmission de la lumière par les milieux troubles. Comptes Rendus Acad. Sci. Fr. 128, 1226-1229.

Compton A.H. (1916) A recording X-ray spectrometer, and the high frequency spectrum of tungsten. Phys. Rev. 7, 646-659.

Compton A.H. (1918) Note on the grating space of calcite and the X-ray spectrum of gallium. Phys. Rev. 11, 430-432.

Compton A.H. (1923) The spectrum of scattered X-rays. Phys. Rev. 22, 409-413. See also 21, 483-502 and a note by him and Y.H. Woo in Proc. Nat. Acad. Sci. 10, 271-273, 1924.

Compton A.H. (1931) A precision X-ray spectrometer and the wave length of Mo Kα1. Rev. Sci. Instr. 2, 365-376.

Compton A.H., H.N. Beets and O.K. DeFoe (1925) The grating space of calcite and rock salt. Phys. Rev. 25, 625-629.

Conroy J. (1886) On the polarisation of light by reflection from the surface of a crystal of Iceland spar. Proc. Royal Soc. 40, 173-191.

Cooksey C.D. and D. Cooksey (1930) Precision measurements of the glancing angle of reflection from calcite for silver X-rays. Phys. Rev. 36, 85-109.

Copeland R. (1900) Preliminary note on observations of the total solar eclipse of 1900 May 28, made at Santa Pola (Casa del Pleito), Spain. Monthly Not. Royal Astr. Soc. 60, 385-391.

Cork J.M. (1932) Variation in the effective lattice constant of crystals with wave-lengths. Phys. Rev. 39, 193-196.

Cornu A. (1866) Théorie nouvelle de la réflexion cristalline d´aprés les idées de Fresnel. Comptes Rendus Acad. Sci. Fr. 63, 1058-1061.

Cornu A. (1867) Recherches sur la réflexion cristalline. Ann. Chim. 11, 283-389.

Cornu A. (1870) Appareil destiné aux mesures des pouvoirs rotatoires. Bull. Soc. Chim. 14, 140-142. Also in J. Pharm. 12, 345-348.

Cornu A. (1872, 1874a) De la réfraction à travers un prisme suivant un loi quelconque. Ann. École Normale 1, 231-272 and 3, 1-46.

Cornu A. (1874b, 1880) Sur le spectre normal du soleil, partie ultra-violette. Ann. École Normale 3, 421-434 and 9, 21-106. More on uv-absorption in the atmosphere and other related topics: 88, 1101-1108 and 1285-1290, 1879, 89, 808-814, 1879, and 90, 940-946, 1880.

Cornu A. (1878) Étude du spectre solaire ultra-violet. Comptes Rendus Acad. Sci. Fr. 86, 101-104.

Cornu A. (1879) Spectroscope destiné à l´observation des radiations ultra-violettes. J. Phys. 8, 185-193.

Cornu A. (1881) Sur l'absorption atmosphérique des radiations ultra-violettes. J. Phys. 10, 5-17.

Cornu A. (1882, 1890) Sur un nouveau photopolarimètre. C.R. Assoc. Fr. 11, 253-255. Sur l´application du photopolarimètre à la météorologie. 19 (pt. 2), 267-270. Much later, E.O. Hulburt designed a similar instrument for estimating the degree of polarization of sky light (U.S. patent no. 1,976,728 of 1934).

Cornu A. (1884) Sur les coefficients d´absorption de l´atmosphère pour les rayons ultra-violets et l´influence probable de l´ozone sur la variation de ces coefficients. C.R. Assoc. Fr. 13 (pt. 2) 103-112. See also W.N. Hartley in J. Chem. Soc. 39, 1881.

Cornu A. (1886) Sur le spectre ultra-violet d´hydrogène. J. Phys. 5, 341-354.

Cornu A. (1889) Résultats numériques obtenus dans l'étude de la réflexion vitreuse et métallique des radiations ultra-violettes. Comptes Rendus Acad. Sci. Fr. 108, 1211-1217.

Cornu A. (1899) La théorie des ondes lumineuses: son influence sur la physique moderne. Rev. Gén. 10, 541-548. Translation in Nature, 27 July, and in the Annual Report of the Smithsonian Institution for 1899, 93-105, 1901.

Coster D. (1921) Präzisionsmessungen in der L-Serie der schwereren Elemente. Zeitschr. Phys. 4, 178-188.

Cotes R. (1775) Hydrostatical and Pneumatical Essays, 3rd. ed. with notes by R. Smith. J. Nourse, London, 288 p. Cotes died in 1716.

Cotton A. (1895a,b) Absorption inégale des rayons circulaires droit et gauche dans certains corps actifs. Comptes Rendus Acad. Sci. Fr. 120, 989-991. Dispersion rotatoire anomale des corps absorbants, 1044-1046. First description of the Cotton effect.

Cotton A. (1896) Recherches sur l´absorption et la dispersion de la lumière par les milieux doués du pouvoir rotatoire. Ann. Chim. 8, 347-432.

Cotton A. (1899) The present status of Kirchhoff's law. Astrophys. J. 9, 237-268.

Cotton A. (1914) Pourquoi faut-il construire un très gros électro-aimant? Rev. Sci. 52, 513-519.

Cotton A. (1931) Prismes polariseurs à champ normal fondés sur la réflexion cristalline interne. Comptes Rendus Acad. Sci. Fr. 192, 268-271.

Cotton A. and P. Manigault (1946) Microscopes polarisants utilisants la réflexion vitreuse. Comptes Rendus Acad. Sci. Fr. 222, 345-348.

Cotton A. and H. Mouton (1903) Les objets ultramicroscopiques. Rev. Gén. Sci. 14, 1184-1193. They published a book on the subject in 1906.

Cotton A. and H. Mouton (1905) Sur le phénomène de Majorana. Comptes Rendus Acad. Sci. Fr. 141, 317-319. Sur le biréfringence magnétique, 349-351. Continued in 142.

Cotton A. and H. Mouton (1907a) Sur les propriétés magnéto-optiques des colloides et des liqueurs hétérogènes. Ann. Chim. 11, 145-203 and 289-339.

Cotton A. and H. Mouton (1907b) Nouvelle propriété optique (biréfringence magnétique) de certains liquides organiques non colloidaux. Comptes Rendus Acad. Sci. Fr. 145, 229-230 and (with P. Weiss) 870-872. Also Ann. Chim. 19, 153-186 and 20, 194-275, 1910.

Cotton A. and H. Mouton (1913) Biréfringence magnétique et constitution chimique. Ann. Chim. 28, 209-243. See also C.R. 154, 818-821 and 930-933, 1912.

Credner H. (1870) Ueber gewisse Ursachen der Krystallverschiedenheiten des kohlensauren Kalkes. J. Prakt. Chem. 110, 292-318.

Crehore A.C. and G.O. Squier (1895) Experiments with a new polarizing photo-chronograph as applied to the measurement of the velocity of projectiles. Phys. Rev. 3, 63-70. Also 2, 122-137, 1894 and La Nature 26(I), 97-99, 1898. U.S. patent no. 548700 on this Faraday-effect oscillograph was granted to A.C.C. in 1895. The instrument was later re-invented by S. Smith, see Astrophys. J. 68, 165-168, 1928.

Crehore A.C. and G.O. Squier (1897) The synchronograph. Trans. AIEE 14, 93-123 and discussions 124-154. See also their U.S. patent no. 698260 granted in 1902, 8 p.

Creveld S. van (1923) Some experiments and remarks on the possible transformation of d-glucose in the intestine and on the nature of blood-sugar. Biochem. J. 17, 860-871.

Cronstedt A.F. (1758) Försök til Mineralogie, eller Mineral-Rikets Upställning. Stockholm, 251 p. Translated e.g. into Danish in 1770 and German in 1780.

Crookes W. (1868) On the measurement of the luminous intensity of light. Proc. Royal Soc. 17, 358-370.

Crookes W. (1885) On radiant matter spectroscopy. Part II. Samarium. Phil Trans. Royal Soc. 176, 691-723.

Cross C.F. (1905) Improved manufacture of a crystalline sugar from a form of cellulose. British patent no. 8544, 2 p.

Crova A. (1878) Étude spectrométrique de quelques sources lumineuses. Comptes Rendus Acad. Sci. Fr. 87, 322-325; more on high-temperature emission 979-981.

Crova A. (1880) Étude des radiations émises par les corps incandescents. Mesure optique des hautes températures. Ann. Chim. 19, 472-550. See also Comptes Rendus Acad. Sci. Fr. 90, 252-254. Includes Nicol-prism photometer.

Crova A. (1881) Comparaison photométrique des sources lumineuses de teintes différentes. Comptes Rendus Acad. Sci. Fr. 93, 512-513, continued 959-961. See also his paper on the same subject in Ann. Chim. 6, 528-545, 1885.

Crova A. (1883) Description d´un spectrophotomètre. Ann. Chim. 29, 550-573. Improvements were suggested by W. Zenker in Zeitschr. Instrumentenk. 4, 83-87, 1884.

Crova A. (1890) Sur l´analyse de la lumière bleue diffusée par le ciel. Ann. Chim. 20, 480-504. Additional studies are in 25, 534-567, 1892.

Crova A. and H. Lagarde (1881) Détermination du pouvoir éclairant des radiations simples. Comptes Rendus Acad. Sci. Fr. 93, 959-961.

Crova A. and F. Houdaille (1890) Observations faites au sommet du mont Ventoux sur l'intensité calorifique de la radiation solaire. Ann. Chim. 21, 188-205.

Cuisinier L. (1882) Les saccharines. Moniteur Scient. 24, 520-523.

Cunningham M. (1918) A reinvestigation of the cellulose-dextrose relationship. J. Chem. Soc. Trans. 113, 173-181.

Curie J. (1889) Recherches sur le pouvoir inducteur spécifique et la conductibilité des corps cristallisés. Ann. Chim. 17, 385-434, more on conductivity in 18, 203-269.

Curie J. and P. (1880) Développement par compression de l'électricité polaire dans les cristaux hemièdres à faces inclinées. Bull. Soc. Minéral. Fr. 3, 90-93.

Currie J.N. (1911) A study of the optical forms of lactic acid produced by pure cultures of Bacillus bulgaricus. J. Biol. Chem. 10, 201-211.

Cushny A.R. (1926) Biological Relations of Optically Isomeric Substances. Bailliere, Tindall & Cox, London, 80 p.

Cuvier G. (1829) Eloge historique de M. Hauy. Mém. Acad. Sci. 8, clxiv-clxxviii. 1823 eulogy, also in Edinb. J. Sci. 4, 1826.

Czapski S. (1891a,b) Mikroskope der optischen Werkstätte von Carl Zeiss in Jena für krystallographische und petrographische Untersuchungen. N. Jahrb. Mineral. Beilageb. 7, 497-505. Totalreflectometer nach Abbe, 175-200.

Czapski S. (1891c) Über die Doppelbrechung schnell gekühlter Glasplatten. Ann. Phys. 42, 319-331.

Czerny M. (1924) Über die Strahlungsemission des Platins. Zeitschr. Phys. 26, 182-187.

Dahlander G.R. (1902) Lärobok i Fysik, 2nd ed. A. Bonniers Förlag, Stockholm, 902 p.

Daish A.J. (1916) The distribution of maltase in plants. II-III. Biochem. J. 10, 49-55, 56-76.

Dakin H.D. (1903) The hydrolysis of optically inactive esters by means of enzymes. J. Physiol. 30, 253-263. Continued in 32, 199-206, 1905.

Dakin H.D. (1912) The racemization of proteins and their derivatives resulting from tautomeric change. I. J. Biol. Chem. 13, 357-362, continued in 15, 263-269, 1913.

Dakin H.D. (1918) On amino-acids. Biochem. J. 12, 290-317, continued in 13, 398-429, 1919.

Dakin H.D. (1920) Amino-acids of gelatin. J. Biol. Chem. 44, 499-529.

Dakin H.D. and H.H. Dale (1919) Chemical structure and antigenic specificity. A comparison of the crystalline egg-albumins of the hen and the duck. Biochem. J. 19, 248-257.

Dammer B. and O. Tietze (1913) Die Nutzbaren Mineralien. I. Band. F. Enke Verlag, Stuttgart, 501 p. Calcite is mostly on p. 384-389.

Daniell J.F. (1816) On some phenomena attending the process of solution, and on their application to the laws of crystallization. Quart. J. Sci. Arts 1, 24-49.

Danjon A. (1926) Description et usage d'un microphotomètre différentiel. Revue d'Optique 5, 55-62.

Danjon A. (1928) Recherches de photométrie astronomique. Ann. Observ. Strasbourg, t. II, fasc. 1, 184 p.

Danker J. (1886) Experimentelle Prüfung der aus den Fresnel´schen Gesetzen der Doppelbrechung abgeleiteten Gesetze der Totalreflexion. N. Jahrb. Mineral. Beilageb. 4, 241-290. See T. Liebisch in 1886(2), 47-66.

Dareste C. (1871) Recherches sur l'amidon animal. Comptes Rendus Acad. Sci. Fr. 72, 845-848. See also A. Dastre and J.P. Morat: De la nature chimique des corps qui, dans l'organisme, présentent la croix de polarisation, in 79, 1081-1083, 1874.

Darmois E. (1911) Recherches sur la polarisation rotatoire naturelle et la polarisation rotatoire magnétique. Ann. Chim. 22, 247-281, 495-590.

Darmois E. (1922) La dispersion rotatoire naturelle. Rev. Gén. Sci. 33, 670-677, 710-716.

Darrigol O. (2012) A History of Optics from Greek Antiquity to the Nineteenth Century. Oxford University Press, Oxford, 327 p.

Daumas M. (1987) Arago. La Jeunesse de la Science, 2nd ed. Belin, Paris, 303 p.

Davies H.G., M.H.F. Wilkins, J. Chayen and L.F. La Cour (1954) The use of the interference microscope to determine dry mass in living cells and as a quantitative cytochemical method. Quart. J. Microsc. Sci. 95, 271-304.

Davis B. and C.M. Slack (1926) Measurement of the refraction of X-rays in a prism by means of the double X-ray spectrometer. Phys. Rev. 27, 18-22.

Davis B. and W.M. Stempel (1921) An experimental study of the reflection of X-rays from calcite. Phys. Rev. 17, 608-623.

Davis B. and H.M. Terrill (1922) The refraction of X-rays in calcite. Proc. Nat. Acad. Sci. 8, 357-361.

Day A.L. and E.S. Shepherd (1906) The lime-silica series of minerals (with optical study by F.E. Wright). Am. J. Sci. 22, 265-302.

Dayton R.W. (1935) Theory and use of the metallurgical polarization microscope. Trans. Am. Inst. Mining and Metallurgical Engineers 117, 119-155, with discussion.

Debye P. (1944) Light scattering in solutions. J. Appl. Phys. 15, 338-342.

Debye P. (1947) Molecular-weight determination by light scattering. J. Phys. Chem. 51, 18-32.

Dehn W.M. and F.A. Hartman (1914) The picrate colorimetric method for the estimation of carbohydrates. J. Am. Chem. Soc. 36, 403-409.

Delanghe G. (1928) La photo-élasticimétrie. Théorie, méthodes et applications. Revue d´Optique 7, 237-265, 285-313.

De la Rive A. (1871) Recherches sur la polarisation rotatoire magnétique des liquides. Ann. Chim. 22, 5-48.

Delbrueck R. (1907, 1912) Hellenistische Bauten im Latium I-II. K.J. Trübner, Strassburg, 92 + 190 p.

Deleuil (1848) Catalogue d'Instruments de Physique, de Chimie, de Mathématiques, de Chirurgie, d´Hygiène et d'Économie Domestique. Paris, 63 p.

Delezenne C. (1834) Notes sur la polarisation. Mém. Soc. Sci. Agric. Arts Lille 11, 283-386. Additions 594-616 and in 12, 5-108, 1835.

Dember H. and M. Uibe (1918) Über die spektrale Polarisation des diffusen Sonnenlichts in der Erdatmosphäre. Ann. Phys. 56, 208-224.

DeMille J.B. (1947) Strategic Minerals. McGraw-Hill, New York, 626 p.

Dempster A.J. (1929) Reflection of protons from crystals. Phys. Rev. 34, 1493-1494. More in 35, 1405-1406, 1930.

Denigès G. (1893) Identification et dosage des lactoses dans les differents laits. J. Pharm. 27, 113-117.

Desains E. (1851) Mémoire sur la polarisation de la lumière réfléchie par le verre. Ann. Chim. 31, 286-295.

Desains P. (1862) Description et discussion de quelques expériences de double réfraction. Comptes Rendus Acad. Sci. Fr. 54, 457-459. See also Provostaye and Desains.

Descamps R. (1926) Sur un spectro-polarimètre photographique pour l´ultraviolet. Revue d'Optique 5, 482-501.

Descamps R. (1930) Methods for measuring rotatory power in the ultra-violet region of the spectrum. Trans. Faraday Soc. 26, 357-371.

Des Cloizeaux A. (1843) Observations sur la calcite. Ann. Chim. 7, 494-497.

Des Cloizeaux A. (1846-47) Note sur le gisement du spath d´Islande. Bull. Soc. Géol. Fr. 4, 768-773. A similar account is in Arch. Missions Scient. Litt. 1, 587-593, 1850.

Des Cloizeaux A. (1855) Mémoire sur la cristallisation et la structure intérieure du quartz. Ann. Chim. 45, 129-316. Also in Mém. Savants Étr. 15, 1858.

Des Cloizeaux A. (1857a) De l'emploi des propriétés biréfringentes en minéralogie. Ann. Mines 11, 261-342. Extract in Comptes Rendus Acad. Sci. Fr. 44, 322-325. More in Ann. Mines 14, 339-420, 1858.

Des Cloizeaux A. (1857b) Note sur l´existence de la polarisation circulaire dans le cinabre. Comptes Rendus Acad. Sci. Fr. 44, 876-878. More 909-912 and in Ann. Chim. 51, 361-367.

Des Cloizeaux A. (1861) Mémoire sur un nouveau procédé propre à mesurer l´indice moyen et l´écartement des axes optiques… Comptes Rendus Acad. Sci. Fr. 52, 784-790.

Des Cloizeaux A. (1862, 1874) Manuel de Minéralogie. Vols. I, II. Dunod, Paris, 572 + 544 p. and 84 plates. Important work on optical properties of hundreds of minerals.

Des Cloizeaux A. (1864) Mémoire sur l´emploi du microscope polarisant et sur l´étude des propriétés optiques biréfringentes propres à déterminer le système cristallin dans les cristaux naturels ou artificiels. Ann. Mines 6, 557-595, translated in Ann. Phys. 126, 387-424, 1865. Drawings of polarizing microscope. See also Ann. Mines 16, 219-242, 1859.

Des Cloizeaux A. (1866) Nouvelles recherches sur les propriétés optiques des cristaux naturels ou artificiels et sur les variations que ces propriétés éprouvent sous l'influence de la chaleur. Comptes Rendus Acad. Sci. Fr. 62, 987-990. Lots more in Mém. Savants Étr. 18, 511-732, 1868.

Des Cloizeaux A. (1875) Mémoire sur les propriétés optiques biréfringentes caractéristiques des quatre principaux feldspaths tricliniques, et sur un procédé pour les distinguer immédiatement les uns des autres. Comptes Rendus Acad. Sci. Fr. 80, 364-371.

Deslandres H. (1886) Spectre du pôle negatif de l'azote. Loi génerale de répartition des raies dans les spectres de bandes. Comptes Rendus Acad. Sci. Fr. 103, 375-379.

Deslandres H. (1888) Spectres des bandes ultra-violets des métalloides avec une faible dispersion. Ann. Chim. 15, 5-86. Also e.g. Spectre de bandes ultra-violet des composés hydrogénés et oxygénés du carbone. Comptes Rendus Acad. Sci. Fr. 106, 842-846.

Deslandres H. (1893) Contribution à la recherche de la couronne solaire en dehors des éclipses totales. Comptes Rendus Acad. Sci. Fr. 116, 126-128. See also his paper on an eclipse in Senegal in 120, 707-709, 1895.

Dessaignes J.P. (1809) Mémoire sur l'influence conductrice ou indéférente des corps pour le fluide de la phosphorescence. J. Phys. 69, 169-200. Additions in 70, 109-128, 1810.

Deussen E. (1909) Ueber die quantitative Bestimmung des Kampfers im officinellen Kampferspiritus. Arch. Pharmazie 247, 307-313.

Deutsche Gesellschaft für Mechanik und Optik (1893) Special Catalogue of the Collective Exhibition of Scientific Instruments and Appliances. German Exhibition, Group 21, The World's Columbian Exposition, Chicago 1893. Berlin, 182 p.

Dick A.B. (1889) A new form of microscope. Mineral. Mag. 8, 160-163. An improved version of this microscope is described by G.W. Grabham in 15, 335-349, 1910.

Dickson W. (1925) The quantitative determination of cotton, linen and wood fibres in paper pulp. Analyst 50, 317-323.

Dictionary of Scientific Biography (1980-90), vols. 1-18. C. Scribner & Sons, New York.

Diderot D. (ed., 1754) Encyclopédie, ou Dictionnaire Raisonné des Sciences, des Arts et des Métiers, t.2, 524-525. Paris.

Diels O. and K. Linn (1908) Zur Kenntnis des Cholesterins V, VI. Ber. Deutsch. Chem. Gesellsch. 41, 260-266 and 544-550.

Dietrich W. (1881) Ueber das Verhältniss der Intensitäten der beiden Natriumlinien. Ann. Phys. 12, 519-526.

Dijksterhuis F.J. (2004) Lenses and Waves. Christiaan Huygens and the Mathematical Science of Optics in the Seventeenth Century. Kluwer, Dordrecht, 289 p.

Dill D.B. and C.L. Alsberg (1925) Preparation, solubility, and specific rotation of wheat gliadin. J. Biol. Chem. 65, 279-304.

Dimmer G. (1908) Über die Polarisation des Lichtes bei der inneren Diffusion. Sitzungsber. Akad. Wiss. Wien 117(2a), 913-924. Continued in subsequent volumes.

Dippel L. (1867) Das Mikroskop und seine Anwendung. Erster Theil. F. Vieweg & Sohn, Braunschweig, 490 p.

Disch J. (1903) Über Beziehungen zwischen natürlicher und elektromagnetischer Rotationsdispersion. Ann. Phys. 12, 1153-1157.

Disney A.L., C.F. Hill and W.E.W. Baker (1928) Origin and Development of the Microscope. Royal Microscopical Society, London, 303 p.

Ditscheiner L. (1871) Über eine einfache Vorrichtung zur Herstellung complementärer Farbenpaare mit Brücke's Schistoskop. Sitzungsber. Akad. Wiss. Wien 63(2), 554-564.

Dittler E. and H. Hueber (1931) Über eine neue Methode zur Bestimmung kleiner und kleinster Wasser- und Kohlensäuremengen in Silikaten. Zeitschr. Anorg. Chemie 199, 17-27.

Djerassi C. (1960) Optical Rotatory Dispersion. Applications to Organic Chemistry. McGraw-Hill, New York, 293 p.

Dobrowolsky W. (1872) Zur Kenntnis über die Empfindlichkeit des Auges gegen Farbentöne, and four other papers, in Graefe's Arch. Ophthalmol. 18(I), 53-103. A short account by H. v. Helmholtz is in Monatsber. Akad. Wiss. Berlin 1872, 119-122.

Dobrowolsky W. (1876) Ueber die Empfindlichkeit des Auges gegen die Lichtintensität der Farben (Farbensinn) im Centrum und auf der Peripherie der Netzhaut. Pflüger's Arch. Physiol. 12, 441-471. More in 24, 189-202, 1881.

Dobson H.J.E. and I. Masson (1924) The activity of water in hydrochloric acid. J. Chem. Soc. Trans. 125, 668-676.

Dodge F.D. (1915) The standardization of alkalimetric solutions. J. Ind. Eng. Chem. 7, 29-30.

Doelter C. (1884) Zur Synthese des Pyroxens. N. Jahrb. Mineral. 1884(2), 51-66.

Doelter C. (1885) Ueber die Abhängigkeit der optischen Eigenschaften von der chemischen Zusammensetzung beim Pyroxen. N. Jahrb. Mineral. 1885(1), 43-68.

Doelter C. (1888) Sur la reproduction des micas. Bull. Soc. Fr. Min. 11, 225-230.

Doelter C. (1904) Die Silikatschmelzen, I-II. Sitzungsber. Akad. Wiss. Wien 113(1), 177-249, 495-511.

Doelter C. (1909) Ein neues Erhitzungsmikroskop. Sitzungsber. Akad. Wiss. Wien 118(1), 489-499. Heizmikroskop mit elektrischer Heizung. Centralbl. Mineral. 1909, 567-571.

Doelter C. (1912) Handbuch der Mineralchemie. Band I. Th. Steinkopf Verlag, Dresden, 1008 p.

Dollond G. (1821) An account of a micrometer made of rock crystal. Phil. Trans. 111, 101-103.

Donath J. (1905) Detection of choline in the cerebro-spinal fluid by means of the polarisation microscope. J. Physiol. 33, 211-219.

Dongier R. (1898) Pouvoir rotatoire du quartz dans l´infra-rouge. Ann. Chim. 14, 331-391.

Dorée C. (1909) The occurrence and distribution of cholesterol and allied bodies in the animal kingdom. Biochem. J. 4, 72-106. More in 7, 616-621, 1913.

Dorno C. (1919) Über Beobachtungen der Sonnen- und Himmelsstrahlung und ihre Bedeutung für die Klimatologie und Biologie sowie für die Geophysik und Astronomie. Naturwissensch. 7, 973-976, 1007-1012.

Doty P. and H.S. Kaufman (1945) The depolarization of light scattered from polymer solutions. J. Phys. Chem. 49, 583-595.

Douglas B. (1994) Optical activity in coordination chemistry. In: Coordination Chemistry, a Century of Progress (ed. G.B. Kauffman). A.C.S. Symposium Series 565. Am. Chem. Soc., Washington D.C., 275-285.

Dove H.W. (1835) Beschreibung eines Apparats für geradlinige, elliptische und circulare Polarisation des Lichtes. Ann. Phys. 35, 596-608. Mentions that several scientists already possess Nicol prisms supplied by a Berlin instrument maker.

Dove H.W. (1847a,b) Ueber Darstellung des Weiss aus Complementarfarben und über die optischen Erscheinungen, welche sich in rotirenden Polarisationsapparaten zeigen. Ann. Phys. 71, 97-111. Ueber Depolarisation des Lichtes, 115-118.

Dove H.W. (1853) Darstellung der Farbenlehre und Optische Studien. G.W.F. Müller, Berlin, 292 p. Largely a reprint of papers published by him since 1835, on experiments with polarized light and color phenomena. A 51-p. Fortsetzung appeared in 1859.

Dove H.W. (1860) Das Dichrooskop. Ann. Phys. 110, 265-278. A much larger instrument than that invented by Haidinger in 1845.

Dove H.W. (1861) Beschreibung eines Photometers. Ann. Phys. 114, 145-163.

Dove H.W. (1864) Ueber ein neues polarisirendes Prisma. Ann. Phys. 122, 18 and 456.

Dowell J.H. (1931) A new polarizing system for spectrophotometers. J. Sci. Instr. 8, 382-384, with more technical details in 10, 153-156, 1933.

Dox A.W. and R.E. Neidig (1914) The soluble polysaccharides of lower fungi. II. J. Biol. Chem. 19, 235-237.

Drabkin D.L. and J.H. Austin (1932) Spectrophotometric studies I. Spectrophotometric constants for common hemoglobin derivatives in human, dog and rabbit blood. J. Biol. Chem. 98, 719-733.

Draper H., C.A. Young and E.C. Pickering (1884) Researches upon the photography of planetary and stellar spectra. Proc. Am. Acad. 19, 231-261.

Dreser H. (1891) Zur Toxikologie des Kohlenoxyds. Arch. Exper. Pathol. Pharmakol. 29, 119-134.

Drude P. (1887) Ueber die Gesetze der Reflexion und Brechung des Lichtes an der Grenze absorbirender Krystalle. Ann. Phys. 32, 584-625. More in 40, 665-680, 1890.

Drude P. (1889a) Ueber Oberflächenschichten. Ann. Phys. 36, 532-560, 865-877.

Drude P. (1889b) Ueber die Reflexion des Lichtes am Kalkspath. Ann. Phys. 38, 265-287.

Drude P. (1890) Bestimmung der optischen Constanten der Metalle. Ann. Phys. 39, 481-554.

Drude P. (1891) Ueber die Reflexion und Brechung ebener Lichtwellen beim Durchgang durch eine mit Oberflächenschichten behaftete planparallelle Platte. Ann. Phys. 43, 126-157, more 158-176.

Drude P. (1898) Die optischen Constanten des Natriums. Ann. Phys. 64, 159-162.

Drude P. (1900a) Lehrbuch der Optik. S. Hirzel Verlag, Leipzig, 498 p.

Drude P. (1900b) Zur Elektronentheorie der Metalle. Ann. Phys. 1, 566-613 and 3, 369-402. More in 7, 687-692, 1902.

Drude P. (1904) Optische Eigenschaften und Elektronentheorie. Ann. Phys. 14, 677-726, 936-961. See also his note in Nachr. Gesellsch. Wiss. Göttingen 1904, 1-8 and the chapters 26-28 written by him in Winkelmann 1906.

Drude P. and W. Nernst (1891) Ueber die Fluorescenzwirkung stehender Lichtwellen. Nachr. Gesellsch. Wiss. Göttingen 1891, 346-358. Also in Ann. Phys. 45, 1892.

Duane W. and K.-F.-Hu (1919) On the X-ray absorption frequencies characteristic of the chemical elements. Phys. Rev. 14, 516-521, more 522-524.

Duane W. and F.L. Hunt (1915) On X-ray wavelengths. Phys. Rev. 6, 166-171. Improvements were made by F.C. Blake and W.D. in 10, 624-637, 1917.

Du Bois H.E.G.J. (1890) Das Kerr’sche magnetooptische Phänomen. Ann. Phys. 39, 25-42.

Dubois W.L. (1907) Estimation of lactose and butter fat in milk chocolate. J. Am. Chem. Soc. 29, 556-561.

Duboscq J. (1851) Catalogue des Instruments d´’Optique. Paris, 16 p.

Duboscq J. (1859, 1870) Catalogue Systématique des Appareils d’Optique. Paris, 36 p.

Duboscq J. (1885) Historique et Catalogue de tous les Instruments d’Optique Supérieure Appliqués aux Sciences et à l’Industrie. Paris, 114 p.

Duboscq J. and H. Soleil (1850) Note sur un nouveau compensateur pour le saccharimètre. Comptes Rendus Acad. Sci. Fr. 31, 248-250.

Dubrunfaut A.P. (1846) Note sur quelques phénomènes rotatoires et sur quelques propriétés des sucres. Comptes Rendus Acad. Sci. Fr. 23, 38-44.

Dubrunfaut A.P. (1847) Note sur le glucose. Ann. Chim. 21, 178-180, see also his paper on p. 169-178. First observation of maltose.

Dubrunfaut A.P. (1849) Mémoire sur les sucres. Comptes Rendus Acad. Sci. Fr. 29, 51-55.

Dubrunfaut A.P. (1869) Note sur la présence des glucoses dans les sucres bruts et raffinés de betteraves. Comptes Rendus Acad. Sci. Fr. 68, 546-547, 663-666. See also a note in Moniteur Scient. 11, p. 296.

Dubrunfaut A.P. (1870) Méthode de séparation du lévulose et du sucre interverti. J. Pharm. 11, 394-397.

[Ducretet E.] (1889) The optical pyrometer. Manufacturer and Builder 21, 81. Translated from La Nature 17, 139-140.

Dudley H.W. and H.E. Woodman (1915) The specificity of casinogens. Biochem. J. 9, 97-102. More in 12, 339-350, 1918 and 15, 187-201, 1921.

Dufet H. (1881) Influence de la température sur la double réfraction du gypse. Bull. Soc. Minéral. Fr. 4, 113-120. More in 8, 171-304, 1885.

Dufet H. (1886) Sur un nouveau microscope polarisant. Bull. Soc. Fr. Minéral. 9, 275-281.

Dufet H. (1891, 1893) Mesures comparatives d’indices par le prisme et la réflexion totale. Bull. Soc. Fr. Minéral. 14, 130-148. Sur les indices de réfraction du spath d´Islande. 16, 149-178.

Dufet H. (1898-1900) Optique, 3 volumes. Gauthier-Villars et Fils, Paris, 1313 p.

Dufet H. (1904a,b) Étude cristallographique et optique du rhamnose. Bull. Soc. Fr. Minéral. 27, 146-156. Recherches expérimentales sur l’existence de la polarisation rotatoire dans les cristaux biaxes, 156-168.

Dugan R.S. (1911) Photometric researches. The Algol System RT Persei. Contrib. Princeton Observ. 1, 60 p.

Duhamel J.M.C. (1832) Sur les équations générales de la propagation de la chaleur dans les corps solides dont la conductibilité n´est pas la même dans tous les sens. J. École Polytechnique 13 (cah. 21), 356-399. More: C.R. 2, 180-182, 1836, Liouville J. Math. 4, 63-78, 1839. This early theoretical work on anisotropy was ignored.

Duhamel J.M.C. (1848) Mémoire sur la propagation de la chaleur dans les cristaux. J. École Polytechnique 19 (cah. 32), 155-188. Extracts in C.R. 25 and 27.

Dujardin F. (1843) Nouveau Manuel Complet de l’Observateur au Microscope. Librairie Roret, Paris, 330 p.

Dumas J.B. (1842) Recherches sur la composition de l´eau (Extrait). Comptes Rendus Acad. Sci. Fr. 14, 537-547, transl. J. Prakt. Chem. 26, 449-460. Includes calcium.

DuMond J.W.M. (1933) The linear momenta of electrons in atoms and in solid bodies as revealed by X-ray scattering. Revs. Mod. Phys. 5, 1-33.

DuMond J.W.M. (1959) A survey of our present sources of information on the conversion constant Λ and the absolute wavelengths of X-ray lines. Proc. Nat. Acad. Sci. 45, 1052-1080.

Dunbar P.B. and R.F. Bacon (1911) Determination of malic acid. J. Ind. Eng. Chem. 3, 826-831.

Duncan R.W. and R.C. Duncan (1912) The optical constants of sodium and potassium. Phys. Rev. 1, 294-308.

Dunn G. (2005) Transmitted-light interference microscopy: a technique born before its time. http://members.aol.com/hbronstein/index/aobaker/article.htm, 10 p.

Duparc L. and F. Pearce (1907) Traité de Technique Minéralogique et Pétrographique, I. Veit & Co., Leipzig, 483 p.

Eadie G.S. (1923) The behaviour of the blood sugar under the action of insulin and other agents. British Medical J. 1923(2), 60-61.

Ebbers C.A. (1999) Optical polarizer material. U.S. patent no. 5,945,037, 4 p.

Ebner V. v. (1874) Untersuchungen über das Verhalten des Knochengewebes im polarisirten Lichte. Sitzungsber. Akad. Wissensch. Wien 70(3), 105-143. Continuation in 72(3), 49-138, 1876 and 75(3), 155-163, 1877.

Ebner V. v. (1882) Untersuchungen über die Ursachen der Anisotropie Organisirter Substanzen. W. Engelmann, Leipzig, 243 p.

Ebner V. v. (1884, 1885) Die Lösungsflächen des Kalkspathes und des Aragonites, I-III. Sitzungsber. Akad. Wiss. Wien 89(2), 368-458 and 91(2), 760-835.

Ebner V. v. (1892) Ueber A. Fromme's Einrichtung des Polarisationsapparates zu histologischen Zwecken. Zeitschr. Wissensch. Mikrosk. 9, 161-168.

Ebner V.v. (1906) Über die histologischen Veränderungen des Zahnschmelzes während der Erhärtung, insbesondere beim Menschen. Arch. Mikrosk. Anatomie 67, 18-81.

Ebstein W. (1888) Zur Naturgeschichte der Concremente im Thierkörper, insbesondere der Harnsteine. Naturwiss. Rundschau 3, 105-111.

Eddy C.E., T.H. Laby and A.H. Turner (1929) Analysis by X-ray spectroscopy. Proc. Royal Soc. A124, 249-269. More e.g. in 127, 20-42, 1930 and 135, 637-656, 1932.

Edlbacher S. (1927) Die Strukturchemie der Aminosäuren und Eiweisskörper. F. Deuticke, Leipzig, 188 p.

Edmunds C.K. (1904) The metallic reflection of selenium. Phys. Rev. 18, 193-229. Continuation 385-402.

Effront J. (1897) Sur le dosage des matières fermentescibles dans les céréales, Moniteur Scient. 49, 270-275.

Ehrenberg C.G. (1848, 1849) Über eine neue einflussreiche Anwendung des polarisirten Lichtes für mikroskopische Auffassung des Organischen und Anorganischen. Ber. Akad. Wiss. Berlin 1848, 238-247. Continued in 1849, 55-76, extract in J. Prakt. Chem. 49, 1850.

Ehrenhaft F. (1903) Das optische Verhalten der Metallkolloide und deren Teilchengrösse. Ann. Phys. 11, 489-511.

Ehringhaus A. (1920) Ein neues anastigmatisches Polarisationsprisma zum Gebrauch als Tubusanalysator im Polarisationsmikroskop. Centralbl. Mineral. 1920, 175-182. See also U.S. patent no. 1,527,848, 3 p., applied for in 1921 by A.E. and granted in 1925.

Ehringhaus A. (1940) Drehkompensatoren mit besonders grossen Messbereich. Zeitschr. Kristallogr. 102, 85-111. Accessories for microscope work, from quartz and calcite.

Ehrlich F. (1904) Über das natürliche Isomere des Leucins. Ber. Deutsch. Chem. Gesellsch. 37, 1809-1840. Continued in 40, 2538-2562, 1907.

Ehrlich F. (1906) Über eine Methode zur Spaltung racemischer Aminosäuren mittels Hefe. Biochem. Zeitschr. 1, 8-31.

Ehrlich F. (1907) Über die Bedingungen der Fuselölbildung und über ihren Zusammenhang mit dem Eiweissaufbau der Hefe. Ber. Deutsch. Chem. Gesellsch. 40, 1027-1047. See also 39, 4072-4075 and papers in Biochem. Zeitschr. 1906.

Einstein A. (1905a) Über einen die Erzeugung und Verwandlung des Lichtes betreffenden heuristischen Gesichtspunkt. Ann. Phys. 17, 132-148. On quantum theory.

Einstein A. (1905b) Zur Elektrodynamik bewegter Körper. Ann. Phys. 17, 891-921, with addition in 18, 639-641. Relativity theory, resolving a conflict between Newton´s mechanics and Maxwell´s electromagnetism.

Einstein A. (1907) Die Plancksche Theorie der Strahlung und die Theorie der spezifischen Wärme. Ann. Phys. 22, 180-190. Correction p. 800.

Einstein A. (1910) Theorie der Opaleszenz von homogenen Flüssigkeiten und Flüssigkeitsgemischen in der Nähe des kritischen Zustandes. Ann. Phys. 33, 1275-1298.

Einstein A. (1911) Eine Beziehung zwischen dem elastischen Verhalten und der spezifischen Wärme bei festen Körpern mit einatomigem Molekül. Ann. Phys. 34, 170-174. More in 35, 679-694.

Einstein A. (1912) Thermodynamische Begründung des photochemischen Äquivalentgesetzes. Ann. Phys. 37, 832-838, with addition in 38, 881-884.

Einstein A. (1917) Zur Quantentheorie der Strahlung. Phys. Zeitschr. 18, 121-128.

Eiríksson H.H. (1920) The spar-mine at Helgustadir, Iceland. Trans. Inst. Mining Eng. 59, 56-63.

Eiríksson H.H. (1922) Silfurbergsnáman á Helgustöðum. Tímarit Verkfræðingafél. Íslands 7, 62-68. A description of the Iceland spar quarry.

Eiríksson H.H. (1930) Iðja á Íslandi. Tímarit Verkfræðingafél. Íslands 15, 38-42.

Eiríksson H.H. (1943) Silfurberg (a chapter on calcite mining, in Icelandic) p. 74-80 of "The History of Industries in Iceland" , vol. 2. Idnadarmannafélagid, Reykjavík.

Eisenlohr W. (1857) Lehrbuch der Physik, 7th ed. Krais & Hoffmann, Stuttgart, 663 p.

Eitel E.H. (1920) American progress in the bacteriological sugars. J. Ind. Eng. Chem. 12, 1202-1205.

Ekenstein W.A.v. (1896) Sur la d-mannose cristallisée. Rec. Trav. Chim. Pays-Bas 15, 221-224.

Eldridge J.A. and H.F. Olson (1926) Polarization by electron impact. Phys. Rev. 28, 1151-1156.

Ellmer A. (1931) Otto Wallach und seine Bedeutung für die Industrie der ätherischen Öle. Zeitschr. Angew. Chemie 44, 929-932.

Elster J. and H. Geitel (1894) Weitere lichtelektrische Versuche. Ann. Phys. 52, 433-454. More in Sitzungsber. Akad. Wiss. Berlin 1894(I), 133-135 and 1895(I), 209-216.

Elster J. and H. Geitel (1895) Lichtelektrische Untersuchungen an polarisirtem Lichte. Ann. Phys. 55, 684-700, with additional results in 61, 445-465, 1897.

Elster J. and H. Geitel (1909) Über den Einfluss des Polarisationszustandes des erregenden Lichtes auf die Elektronenemission an Alkalimetallflächen. Phys. Zeitschr. 10, 457-465.

Elster J. and H. Geitel (1912) Der photoelektrische Effekt am Kalium bei sehr geringen Lichtstärken. Phys. Zeitschr. 13, 468-476.

Elster J. and H. Geitel (1913) Die Proportionalität von Lichtstärke und Photostrom in Alkalimetallzellen. Phys. Zeitschr. 14, 741-752.

Emerson R. (1929) Photosynthesis as a function of light intensity and of temperature with different concentrations of chlorophyll. J. Gen. Physiol. 12, 623-639.

Emery J.A. (1904) Estimation of nicotine in presence of pyridine. J. Am. Chem. Soc. 26, 1113-1119.

Emich F. (1911) Lehrbuch der Mikrochemie. J.F. Bergmann, Wiesbaden, 212 p. A second edition appeared in 1926, 273 p.

Emich F. (1916) Über mikrochemische Arbeitsmethoden. Naturwissensch. 4, 625-632. Mentions use of polarized-light microscopes by E. Fischer and other chemists for the identification of minute crystals. See also Ber. Deutsch. Chem. Ges. 43, 10-45, 1910.

Endell K. (1921) Über ein neues Erhitzungsmikroskop für hohe Temperaturen mit synchroner Nikoldrehung. Zeitschr. Kristallogr. 56, 191-193.

Endell K. and H. Hanemann (1913) Über die optische Orientierung einiger Metallschmelzen.

Zeitschr. Anorg. Chemie 83, 267-274. More by H.H. in 88, 265-268, 1914, and he obtained in 1923 a German patent no. 378834 on a polarizing system for metal microscopes.
Engelking E. (1925) Die Tritanomalie, ein bisher unbekannter Typus anomaler Trichromasie. Graefe's Arch. Ophthalmol. 116, 196-244.
Engelmann T.W. (1873) Mikroskopische Untersuchungen über die quergestreifte Muskelsubstanz. Pflüger's Arch. Physiol. 7, 33-71 and 155-188.
Engelmann T.W. (1875) Contractiliteit en dubbelbrekend vermogen. Onderzoek. Physiol. Lab. Utrecht Hoogesch. 3 (Afl. 2), 1-44, transl. in Pflüger's Arch. Physiol. 11, 432-465.
Engelmann T.W. (1895) On the nature of muscular contraction. Proc. Royal Soc. 57, 411-433.
Engeln O.D.v. (1915) Experimental studies and observations on ice structure. Am. J. Sci. 40, 449-473.
Epstein P.S. (1916) Zur Theorie des Starkeffektes. Ann. Phys. 50, 489-520.
Erdmann O.L. and R.F. Marchand (1842) Ueber die Atomgewichte des Wasserstoffes und des Calciums. J. Prakt. Chem. 26, 461-478. Extract in Ann. Chim. 8, 207-216.
Erdmann O.L. and R.F. Marchand (1844) Ueber das Atomgewicht des Calciums. J. Prakt. Chem. 31, 257-271. More in 37, 65-80, 1846. Uses Iceland spar as raw material.
Erdmann O.L. and R.F. Marchand (1850) Nachträgliche Bemerkung über das Aequivalent des Calciums. J. Prakt. Chem. 50, 237-238.
Erlach K. v. (1847) Mikroskopische Beobachtungen über organische Elementartheile bei polarisirtem Lichte. Arch. Anat. Physiol. Wiss. Medicin 1847, 313-337.
Erlenmeyer E. and C. Hell (1871) Über Valeriansäuren verschiedenen Ursprungs. Liebig's Ann. Chemie 160, 281-303.
Erlenmeyer E. and A. Arnold (1904) Eine neue Trennungsmethode racemischer Verbindungen. Liebig's Ann. Chemie 337, 307-328.
Erman P. (1819) Ueber die Frage: ob polarisirte Strahlen eine Glasfläche durch Absorption mehr erwärmen als nicht polarisirte. Abh. Akad. Wiss. Berlin 1818-19, 404-410.
Ernecke F. (1902) Preis-Liste No. 18 über Physikalische Apparate. Berlin, 382 p.
Errera G. (1891) Lezioni sulla Polarimetria. Guadagnini & Candellero, Torino, 228 p.
Esselbach E. (1856) Anhang I. Ueber die Anwendbarkeit der Talbot´schen Linien, als Mittel zur Messung optischer Constanten, mit Bezug auf Airys Theorie derselben. Ann. Phys. 98, 527-541, part of a paper on ultraviolet radiation p. 513-541.
Ettingshausen A. v. (1856) Über die neueren Formeln für das an einfach brechenden Medien reflectirte und gebrochene Licht. Sitzungsber. Akad. Wiss. Wien 18, 369-391.
Eucken A. (1911) Über die Temperaturabhängigkeit der Wärmeleitfähigkeit fester Nichtmetalle. Ann. Phys. 34, 185-221.
Euler H. and B. af Ugglas (1910) Untersuchungen über die chemische Zusammensetzung und Bildung der Enzyme I. Zeitschr. Physiol. Chemie 65, 124-140. First of a long series.
Euler H. and I. Laurin (1920) Temperature-coefficients of the action of saccharase. Zeitschr. Physiol. Chemie 110, 55-92.
Euler H. and K. Myrbäck (1923) Kinetische Untersuchungen an Saccharase. Zeitschr. Physiol. Chemie 124, 159-170.
Euler H.v., A. Ölander and E. Rudberg (1925) Kinetik der Mutarotation. Zeitschr. Anorg. Chemie 146, 45-68. More in 152, 113-132, 1926 and 156, 143-153, 1926.
European Union (1999) Commission Directive 1999/79/EC of 27 July 1999 …establishing Community methods of analysis for the official control of feedingstuffs. Official J. European Communities L 209, 23-27.
Evans C. L. (1912) The amyloclastic property of saliva. J. Physiol. 44, 191-202.
Evans J.W. (1949) The birefringent filter. J. Opt. Soc. Am. 39, 229-242.

Ewald A. (1886) Polari-spectroskopische Untersuchungen an Blutkrystallen. Zeitschr. Biol. 22, 459-476.

Ewald P.P. (1923) Kristalle und Röntgenstrahlen. J. Springer, Berlin, 327 p.

Ewell A.W. (1903) Rotatory polarization mechanically produced. Am. J. Sci. 15, 363-388.

Ewers E. (1908) Über die Bestimmung des Stärkegehaltes auf polarimetrischem Wege. Zeitschr. Öffentl. Chem. 14, 8-19, 150-157.

Exner F. (1902) Über die Grundempfindungen im Young-Helmholtz'schen Farbensystem. Sitzungsber. Akad. Wiss. Wien 111(2a), 857-877.

Fabry C. and H. Buisson (1921) A study of the ultra-violet end of the solar spectrum. Astrophys. J. 54, 297-322, translated from J. Phys.

Fabry C. and A. Perot (1900) Sur la constitution des raies jaunes de sodium. Comptes Rendus Acad. Sci. Fr. 130, 653-655.

Fales H.A. and J.C. Morrell (1922) The velocity of inversion of sucrose as a function of the thermodynamic concentration of hydrogen ion. J. Am. Chem. Soc. 44, 2071-2091.

Faraday M. (1846a, 1849) Experimental researches in electricity. A long series of papers in Phil. Trans Royal Soc. Those most relevant here are no. 19 on the Faraday magneto-optic effect, in 136, 1-20, 1846, followed by nos. 20 and 21 on diamagnetic and paramagnetic materials, 21-40 and 41-62 respectively, and no. 22 on the magnetic properties of crystals including Iceland spar, in 139, 1-18 and 19-42, 1849 (with additions in no. 26). Papers 1 to 29 were also reprinted in book form (3 volumes) along with various other writings.

Faraday M. (1846b) Thoughts on ray-vibrations. Phil. Mag. 28, 345-350.

Faraday M. (1856) Experimental researches in electricity, 30th series. Phil. Trans. Royal Soc. 146, 159-180. Includes studies on an Iceland spar sphere in a magnetic field.

Fau J. and Chevalier C. (1854) Nouveau Manuel Complet du Physicien-Préparateur II. Roret, Paris, 530 p.

Fechner G.T. (1832) Repertorium der Experimentalphysik, vol. 2. L. Voss, Leipzig, 498 p. The chapter Lehre vom Lichte covers p. 71-393.

Feder E. (1914) Die Bestimmung des Milchzuckers in der Milch auf polarimetrischem Wege. Zeitschr. Unters. Nahr.-Genussm. 28, 20-29.

Federico R. and P. Baccei (1899) Über den elektrolytischen Unterbrecher von Wehnelt. Phys. Zeitschr. 1, 137-138.

Fedorow E. v. (1891) Eine neue Methode der optischen Untersuchung von Krystallplatten in parallellem Lichte. Mineral. Petrogr. Mitth. 12, 505-509. On the Universal stage.

Fedorow E.v. (1893) Universal- (Theodolith-) Methode in der Mineralogie und Petrographie. Zeitschr. Kristallogr. 21, 574-714 and 22, 229-268.

Fedorow E. v. (1901) Einige neue Hülfsapparate für das Polarisationsmikroskop. Translated from a Russian publication in Zeitschr. Kristallogr. 37, 413-414, 1903 (more in 40, 297-298, 1904-05).

Fedorow N.T. and V.J. Fedorowa (1929) Untersuchungen auf dem Gebiete des Farbensehens. Zeitschr. Phys. 57, 855-864.

Fellinger R. (1902) Bestimmung der Dielektricitätsconstante von Krystallen im homogenen elektrischen Felde. Ann. Phys. 7, 333-357.

Fenner C.N. (1912) The various forms of silica and their mutual relations. J. Wash. Acad. Sci. 2, 471-480.

Ferguson J.B. and H.E. Merwin (1919) The ternary system CaO-MgO-SiO_2. Am. J. Sci. 48, 81-123.

Fermi E. and F. Rasetti (1925) Über den Einfluss eines wechselnden magnetischen Feldes auf die Polarisation der Resonanzstrahlung. Zeitschr. Phys. 33, 246-250.

Fermi E. and L. Marshall (1947) Interference phenomena of slow neutrons. Phys. Rev. 71, 666-677.

Feussner K. (1884) Ueber die Prismen zur Polarisation des Lichtes. Zeitschr. Instrumentenk. 4, 41-50. Summarized by P.R. Sleeman in Nature 29, 514-517, 1884.

Fieldner A.C. and A.E. Hall (1915) The fusibility of coal ash in various atmospheres. J. Ind. Eng. Chem. 7, 399-406. More 474-481, 742-747 and 829-835.

Filon L.N.G. (1907) On the dispersion in artificial double refraction. Phil. Trans. Royal Soc. A207, 263-306. Extract in Proc. Royal Soc. A79, 200-202, 440-442.

Filon L.N.G. (1912) The investigation of stresses in a rectangular bar by means of polarized light. Phil. Mag. 23, 1-25.

Fischer E. (1890a,b,c,d) Synthese der Mannose und Lävulose. Ber. Deutsch. Chem. Gesellsch. 23, 370-394. Synthese des Traubenzuckers, 799-805. Synthesen in der Zuckergruppe, 2114-2141 (abstract in J. Am. Chem. Soc. 12, 340-348). Ueber die optischen Isomeren des Traubenzuckers, der Gluconsäure und der Zuckersäure. 2611-2624.

Fischer E. (1894a) Synthesen in der Zuckergruppe II. Ber. Deutsch. Chem. Gesellsch. 27, 3189-3232. One of many important papers by Fischer on sugar synthesis.

Fischer E. (1894b) Einfluss der Configuration auf die Wirkung der Enzyme. Ber. Deutsch. Chem. Gesellsch. 27, 2985-2993, 3479-3483.

Fischer E. (1895) Ueber die Isomaltose. Ber. Deutsch. Chem. Gesellsch. 28, 3024-3028.

Fischer E. (1898-99) Bedeutung der Stereochemie für die Physiologie. Zeitschr. Physiol. Chemie 26, 60-87.

Fischer E. (1899) Ueber die Spaltung einiger racemischer Amidosäuren in die optisch-aktiven Componenten. Ber. Deutsch. Chem. Gesellsch. 32, 2451-2471. More in paper II 3638-3846, and III in 33, 2370-2382, 1900.

Fischer E. (1905, with several co-authors) Synthese von Polypeptiden. XI. Liebig's Ann. Chemie 340, 123-204.

Fischer E. (1906) Synthese von Polypeptiden. XV. Ber. Deutsch. Chem. Gesellsch. 39, 2893-2931. See also his review lecture p. 530-610.

Fischer E. (1907) Zur Kenntnis der Waldenschen Umkehrung. Ber. Deutsch. Chem. Gesellsch. 40, 489-508.

Fischer E. (1911) Über Mikropolarisation. Ber. Deutsch. Chem. Gesellsch. 44, 129-132.

Fischer E. and O. Piloty (1891) Ueber eine neue Pentonsäure und die zweite inactive Trioxyglutarsäure. Ber. Deutsch. Chem. Gesellsch. 24, 4214-4225.

Fischer E. and H. Thierfelder (1894) Verhalten der verschiedenen Zucker gegen reine Hefen. Ber. Deutsch. Chem. Gesellsch. 27, 2031-2037.

Fischer E. and A. Mouneyrat (1900) Spaltung einiger racemischer Aminosäuren in die optisch-aktiven Komponenten. IV. Ber. Deutsch. Chem. Gesellsch. 33, 2383-2393, continued in paper V by E.F. and R. Hagenbach 34, 3764-3767, 1901.

Fischer E. and E.F. Armstrong (1901) Ueber die isomeren Acetohalogen-Derivate des Traubenzuckers und die Synthese der Glucoside. Ber. Deutsch. Chem. Gesellsch. 34, 2885-2900. Continued in 35, 833-843, 1902.

Fischer E. and E.F. Armstrong (1902) Synthese einiger neuer Disaccharide. Ber. Deutsch. Chem. Gesellsch. 35, 3144-3153.

Fischer E. and H. Leuchs (1902, 1903) Synthese des Serins, der l-Glucosaminsäure und anderer Oxyaminosäuren. Ber. Deutsch. Chem. Gesellsch. 35, 3787-3805. Synthese des d-Glucosamins. 36, 25-29.

Fischer E. and E. Abderhalden (1905) Über das Verhalten verschiedener Polypeptide gegen Pankreassaft und Magensaft. Zeitschr. Physiol. Chemie 46, 52-82. More in 51, 264-268, 1907 and in papers by Abderhalden.

Fischer E. and O. Warburg (1905) Spaltung des Leucins in die optisch-aktiven Komponenten. Ber. Deutsch. Chem. Gesellsch. 38, 3997-4005.

Fischer E. and W.A. Jacobs (1906, 1907) Spaltung des racemischen Serins in die optisch-activen Componenten. Ber. Deutsch. Chem. Gesellsch. 39, 2942-2950. Über die optisch-aktiven Formen des Serins, Isoserins und der Diamino-propionsäure. 40, 1057-1070.

Fischer E. and K. Raske (1907) Verwandlung des l-Serins in d-Alanin. Ber. Deutsch. Chem. Gesellsch. 40, 3717-3724. More in 41, 893-897, 1908.

Fischer E. and K. Raske (1909) Synthese einiger Glucoside. Ber. Deutsch. Chem. Gesellsch. 42, 1465-1476.

Fischer E. and G. Zemplén (1909) Synthese der beiden optisch-aktiven Proline. Ber. Deutsch. Chem. Gesellsch. 42, 2989-2997.

Fischer E. and K. Freudenberg (1912) Über das Tannin und die Synthese ähnlicher Stoffe I. Ber. Deutsch. Chem. Gesellsch. 45, 915-935. II, 2709-2726.

Fischer E. and M. Bergmann (1917) Synthese des Mandelnitril-glucosids, Sambunigrins und ähnlicher Stoffe. Ber. Deutsch. Chem. Gesellsch. 50, 1047-1069.

Fischer E. and M. Bergmann (1919) Über das Tannin und die Synthese ähnlicher Stoffe. VI. Ber. Deutsch. Chem. Gesellsch. 52, 829-854.

Fischer H. (1911) Zur Kenntnis der Gallenfarbstoffe. I. Zeitschr. Physiol. Chemie 73, 204-239.

Fisk H.G. (1934) The nature of Portland cement clinker. J. Chem. Educ. 11, 195-203.

FitzGerald G.F. (1877) On the rotation of the plane of polarization of light by reflection from the pole of a magnet. Proc. Royal Soc. 25, 447-450. His first scientific paper.

FitzGerald G.F. (1880) On the electromagnetic theory of the reflection and refraction of light. Phil. Trans. Royal Soc. 171, 691-711.

Fizeau H. (1860) Sur une méthode propre à rechercher si l'azimut de polarisation du rayon réfracté est influencé par le mouvement du corps réfringent. Ann. Chim. 58, 129-163. Also in C.R. 49, 717-723, 1859, transl. in Ann. Phys. 114, 160-169, 554-587.

Fizeau H. (1861) Recherches sur plusieurs phenomenes relatifs à la polarisation de la lumière. Ann. Chim. 63, 385-414. Extract in Comptes Rendus Acad. Sci. Fr. 52.

Fizeau H. (1862) Recherches sur les modifications que subit la vitesse de la lumière dans le verre et plusieurs autres corps solides sur l´influence de la chaleur. Ann. Chim. 66, 429-482. Transl. in Ann. Phys. 119, 87-114, 297-317, 1863. Includes measurements on Iceland spar. Further discussion in a paper on quartz, Ann. Chim. 2, 143-185, 1864.

Fizeau H. (1866) Mémoire sur la dilatation des corps solides par le chaleur. Comptes Rendus Acad. Sci. Fr. 62, 1101-1106, 1133-1148. More: 66, 1005-1014, 1072-1086, 1868. Includes calcite. The same method was applied by R. Benoît 1888.

Fizeau H. and L. Foucault (1845) Sur le phénomène des interférences entre deux rayons de lumière dans le cas de grandes différences de marche. Comptes Rendus Acad. Sci. Fr. 21, 1155-1158. More in Ann. Chim. 26, 138-148, 1849 and 30, 146-159, 1850. Their versatile apparatus was also described by J. Müller in Ann. Phys. 69, 98-109, 1846.

Fizeau H. and L. Foucault (1847) Recherches sur les interférences des rayons calorifiques. Comptes Rendus Acad. Sci. Fr. 25, 447-450.

Flächer F. (1908) Über die Spaltung des synthetischen dl-Suprarenins in seine optisch aktiven Komponenten. Zeitschr. Physiol. Chemie 58, 189-194.

Flechsig E. (1883) Ueber Darstellung und chemische Natur des Cellulosezuckers. Zeitschr. Physiol. Chemie 7, 523-540.

Fleischl E.v. (1885) Das Spectro-Polarimeter. Exner's Repertorium der Physik 21, 323-331. Intended for measurements on diabetic urine. See also German patent no. 33039.

Fletcher L. (1891) The optical indicatrix and the transmission of light in crystals. Mineral. Mag. 9, 278-388.

Fletcher L. (1893) On baddeleyite (native zirconia), a new mineral, from Rakwana, Ceylon. Mineral. Mag. 10, 148-160.

Fleury G. (1876) Recherches sur l'inversion du sucre de canne par les acides et les sels. Ann. Chim. 7, 381-405.
Fleury P. (1930) Couleurs et colorimétrie. Text of a lecture, published as Conférences d'actualités scientifiques et industrielles 12. Hermann & Cie, Paris, 33 p.
Flint E. (1971) Essentials of Crystallography. Mir, Moscow, 232 p.
Fogelberg I. (1904) Über Bestimmung von Saccharose und Raffinose in Gegenwart von Dextrose und Invertzucker. Deutsche Zucker-Ind. 29, 761-766.
Foote H.W. and W.M. Bradley (1926) The determination of calcium by the conversion of the oxalate to the carbonate. J. Am. Chem. Soc. 48, 676-678.
Foote P.D. (1927) Depolarization of resonance radiation. Phys. Rev. 30, 300-304.
Föppl L. and E. Mönch (1959) Praktische Spannungsoptik, 2nd ed. Springer, Berlin, 209 p.
Forbes D. (1867) The microscope in geology. Popular Science Review 6, 355-368.
Forbes J. D. (1835) On the refraction and polarization of heat. Phil. Mag. 6, 134-142, 205-214, 284-291, 366-371 (also in Trans. Royal Soc. Edinb. 13, 131-168, 1836) and Note relative to the polarization of heat. Phil. Mag. 7, 349-352.
Forbes J.D. (1836a,b) Researches on heat. Second series. Trans. Royal Soc. Edinb. 13, 446-471 (also in Phil. Mag. 12, 545-559, 1838). On the undulatory theory of heat, and on the circular polarization of heat by total reflexion. Phil. Mag. 8, 246-249.
Forbes J.D. (1838) Researches on heat. Third series. Phil. Mag. 13, 97-113, 180-192.
Forge F.B. La and C.S. Hudson (1917) Sedoheptose, a new sugar from Sedum spectabile. I. J. Biol. Chem. 30, 61-77. Continued in 42, 367-374, 1920.
Förster F. (1890) Eine Methode zur quantitativen Bestimmung von Campher. Ber. Deutsch. Chem. Gesellsch. 23, 2981-2989.
Försterling K. (1928) Lehrbuch der Optik. S. Hirzel, Leipzig, 610 p.
Foster L.V. (1938) A polarizing vertical illuminator. J. Opt. Soc. Am. 28, 124-126. A study of polarized vertical illumination, 127-129. U.S. patent no. 2,074,106.
Foucault L. (1857) Nouveau polariseur en spath d´Islande. Expérience de fluorescence. Comptes Rendus Acad. Sci. Fr. 45, 238-241. Transl. in Ann. Phys.
Foucault L. and J. Regnauld (1849) Note sur quelques phénomènes de la vision au moyen des deux yeux. Comptes Rendus Acad. Sci. Fr. 28, 78-80.
Fouqué F. (1876) Détermination des minéraux microscopiques des roches. Rev. Sci. 11, 589-596.
Fouqué F. (1879) Les applications modernes du microscope à la géologie. Revue des deux Mondes 34, 406-431.
Fouqué F. (1882) Reproduction artificielle des roches éruptives. Rev. Sci. 2, 834-837 and 3, 133-143, extract from a book on the synthesis of minerals and rocks.
Fouqué F. and A. Michel-Lévy (1879) Minéralogie Micrographique. Roches Éruptives Françaises. A. Quantin, Paris, 509 p. and atlas of 55 plates.
Fourcroy A.F. de and L.N. Vauquelin (1804) Expériences comparées sur l´arragonite d´Auvergne, et le carbonate de chaux d´Islande. Ann. du Muséum d´Hist. Nat. 4, 405-411. Chemical analyses.
Franck J. and G. Hertz (1912) Über durch polarisiertes Licht erregte Fluorescenz von Joddampf. Verh. Deutsch. Phys. Gesellsch. 18, 423-425.
Françon M. (1952) Interférences par double réfraction en lumière blanche. J. Phys. Rad. 13(7), 99A-104A.
Françon M. (1957) Polarization apparatus for interference microscopy and macroscopy of isotropic transparent objects. J. Opt. Soc. Am. 47, 528-535.
Françon M. (1963) Modern Applications of Physical Optics. Interscience, New York, 106 p.
Fränkel S. and A. Kelly (1902) Beiträge zur Constitution des Chitins. Monatsh. Chemie 23, 123-132.

Frankenheim M.L. (1829) De crystallorum cohaesione. A. Schulz, Breslau, 45 p. Translated in Baumgartner's Zeitschr. Phys. Mathem. 9, 94-106, 194-208, 332-357, 1831.

Frankenheim M.L. (1836) Ueber die Verbindung verschiedenartiger Krystalle. Ann. Phys. 37, 516-522.

Frankenheim M.L. (1854, 1860) Ueber die Isomerie bei dem salpetersauren Kali und dem kohlensauren Kalk. Ann. Phys. 92, 354-365. Ueber das Entstehen und das Wachsen der Krystalle nach mikroskopischen Beobachtungen. 111, 1-60.

Frankland P. (1892) Micro-organisms in their relation to chemical change. Nature 46, 135-140.

Frankland P. and E. Done (1905) The resolution of inactive glyceric acid by fermentation and by brucine. J. Chem. Soc. Trans. 87, 618-625.

Franz R. (1850) Ueber die Härte der Mineralien und ein neues Verfahren dieselbe zu messen. Ann. Phys. 80, 37-55. Includes Iceland spar.

Fraunhofer J. (1823) Kurzer Bericht von den Resultaten neuerer Versuche, über die Gesetze des Lichtes, und die Theorie derselben. Ann. Phys. 74, 337-378.

Frazer J.H. (1929) An optical study of adsorbed films. Phys. Rev. 33, 97-104.

Fredericq L. (1880) Recherches sur les substances albuminoïdes du sérum sanguin. Arch. Biol. 1, 457-473. More in 2, 379-385, 1881.

Frehafer M.K. (1920) Reflection and transmission of ultra-violet light by sodium and potassium. Phys. Rev. 15, 110-125.

Fremy E. (1891) Synthèse du Rubis 1877-1890. Dunod, Paris, 58 p. including plates.

French H.S. and T.M. Lowry (1924) Studies of co-ordination I. Absorption spectra and co-ordination of some cupric compounds. Proc. Royal Soc. A106, 489-512.

Fresenius W. (1896) Ueber die Bestimmung des Rendements und die chemische Analyse von Rohzucker. Zeitschr. Anal. Chemie 35, 690-725.

Fresenius W. and L. Grünhut (1921) Beiträge zur chemischen Analyse des Weines, nos. 14 and 15. Zeitschr. Anal. Chemie 60, 168-181, 181-187.

Fresnel A. (1816, 1819) Mémoire sur la diffraction de la lumière. Ann. Chim. 1, 239-281 and 11, 246-296, 337-378. Awarded a prize by the Academy in 1819.

Fresnel A. (1817) Mémoire sur les modifications que la réflexion imprime à la lumière polarisée. Presented to the Academy in 1817-18, see also Mém. Acad. Sci. 11, 393-433, 1832. Published in Fresnel (1866-70).

Fresnel A. (1821) Note sur le calcul des teintes que la polarisation développe dans les lames cristallisées. Ann. Chim. 17, 102-111, 167-196, 312-315. See also Arago 1821.

Fresnel A. (1821-22) Various papers quoted by Buchwald 1989, incl. Note sur l´expérience des franges produites par deux rhomboïdes de chaux carbonatée. Premier mémoire sur la double refraction, and Mémoire sur la double réfraction (Extrait), with Supplements. Published in Fresnel (1866-70).

Fresnel A. (1822a) Sur la double refraction particulière que présente le cristal de roche dans la direction de son axe. Extract in Bull. Soc. Philom. 191-198 and Ann. Chim. 20, 376-382, more in Ann. Chim. 28, 147-161, 263-279, 1825.

Fresnel A. (1822b) De la lumière. First published as a supplementary chapter in the French edition of T. Thomson´s Chemistry. Reprinted in Les Classiques de la Science, Paris 1914, 132 p. A German translation was published in Ann. Phys. 1825-28, and an English translation by T. Young appeared in the Quarterly Review in 1827-29.

Fresnel A. (1822c) Extrait d'un mémoire sur la double réfraction. Bull. Soc. Philom. 1822, 63-71.

Fresnel A. (1823) Extrait d'un mémoire sur la loi de modifications imprimées à la lumière polarisée par sa réflexion totale dans l'intérieur des corps transparents. Bull. Soc. Philom. 1823, 29-36. Also in Ann. Chim. 29, 175-187, 1825.

Fresnel A. (1827) (Second) Mémoire sur la double réfraction. Mém. Acad. Sci. 7, 45-176. Transl. in Ann. Phys. 23, 1831.
Fresnel A. (1866-70) Oeuvres Complètes I-III. Edited by H. de Senarmont, É. Verdet and L. Fresnel. Imprimerie Nationale, Paris, 804+864+751 p. Reprinted 1995.
Freudenberg K. (1933) Stereochemie I-III. F. Deuticke, Leipzig, 1509 p.
Freudenberg K. and L. Purrmann (1923) Raumisomere Catechine, III. Ber. Deutsch. Chem. Gesellsch. 56, 1185-1194.
Freudenberg K. and F. Rhino (1924) Die Konfiguration des Alanins. Ber. Deutsch. Chem. Gesellsch. 57, 1547-1557.
Freudenberg K. and A. Lux (1928) Die Konfiguration der monosubstituierten Propion- und Bernsteinsäuren. Ber. Deutsch. Chem. Gesellsch. 61, 1083-1089.
Freudenberg K. and W. Kuhn (1931) Regeln und Superposition bei der optischen Drehung. Ber. Deutsch. Chem. Gesellsch. 64, 703-732.
Frey A. (1925) Zur Frage nach der Ursache des Dichroismus gefärbter Fasern. Naturwissensch. 13, 403-406.
Frey A., A. Köhler, W.J. Schmidt, K. Spangenberg and R. Zsigmondy (1926) Hermann Ambronn zum siebzigsten Geburtstage. Naturwissensch. 14, 765-771.
Frick H. (1930) Reflexionsmessungen an Erz- und Metallanschliffen mit Hilfe eines Reflexions-Photometer-Okulars. N. Jahrb. Mineral. Beilageb. 61A, 31-86.
Frick J. (1856) Die Physikalische Technik, 2nd ed. F. Vieweg & Sohn, Braunschweig, 588 p.
Friedel C. (1893) Sur un procédé de mesure des biréfringences. Bull. Soc. Fr. Minéral. 16, 19-33. Extract in C.R. 116, 272-274.
Friedel G. (1902) Sur deux clivages de la calcite. Bull. Soc. Fr. Minéral. 25, 113-115. See also J. Donnay et al., Am. Mineral. 19, 437-458, 1934.
Friedel G. (1922) Les états mésomorphes de la matière. Ann. de Phys. 18, 273-474. Review on properties of liquid crystals.
Friedel G. (1926) Leçons de Cristallographie. Berger-Levrault, Nancy, 602 p.
Fries C. (1948) Optical calcite deposits of the Republic of Mexico. Bull. U.S. Geol. Survey 954D, 113-177 + maps.
Fritze H. (1915) Die optischen Konstanten durchsichtiger Silber- und Kupferschichten. Ann. Phys. 47, 763-790.
Frocht M.M. (1941, 1948) Photoelasticity I - II. J. Wiley & Sons, New York, 411+505 p.
Fröhlich J. (1878, 1882) Experimentaluntersuchungen über die Intensität des gebeugten Lichtes. Ann. Phys. 3, 568-582 and 15, 576-613.
Fröhlich P. (1926) Die Polarisation des Fluoreszenzlichts von Farblösungen. Zeitschr. Phys. 35, 193-206.
Fry W.H. (1914) Identification of common fertilizer materials. U.S. Dept. Agriculture, Bureau of Soils, Bull. 97, 13 p.
Fuchs F. (1882) Vorschlag zur Construction eines Augenspiegels mit neuer Reflexions- und Polarisationsvorrichtung. Zeitschr. Instrumentenk. 2, 305-310.
Fuess R. (1891, 1896) Ueber Mikroskope für krystallographische und petrographische Untersuchungen. N. Jahrb. Mineral. Beilageb. 7, 55-89. More p. 406-416 (on heated stages) and in a paper with the same title in Zeitschr. Instrumentenk. 16, 16-21.
Fuess R. (c. 1910) Part of illustrated catalog (Hauptkatalog 113?) on spectrometers.
Fürth R. (1915) Spektralphotometrische Untersuchung der Opaleszenz eines binären Flüssigkeitsgemisches. Sitzungsber. Akad. Wiss. Wien 124(2a), 577-596.
Gadamer J. (1897) Über die Bestandteile des schwarzen und des weissen Senfsamens. Arch. Pharmazie 235, 44-114.

Gadamer J. (1901) Die Beziehungen des Hyoscyamins zu Atropin und des Scopolamins zu i-Scopolamin. Arch. Pharmazie 239, 294-333. More in 240, 498-504, 1902.

Gadamer J. (1913) Über die Racemisation der Tropasäure und ihrer Ester: zugleich eine Theorie der Racemisation, Substitution und Waldensche Umkehrung. J. Prakt. Chemie 87, 312-392.

Gaimard P. (1836a) Travaux de la Commission scientifique d´Islande. Comptes Rendus Acad. Sci. Fr. 3, 387 and 465-473. Extract of letter regarding the Helgustadir calcite quarry and other matters; see also letter by E. Robert, 425-430.

Gaimard P. (1836b) Lettre au Ministre de la marine. Ann. Marit. Colon. 21e année, t. II, 408-410.

Gallahan W. (1931) Sound recording system. U.S. patent no. 1,810,703, applied for in 1928 on behalf of the Westinghouse Electrical and Manufacturing Company, 3 p.

Galli N. and K. Försterling (1917) Über die Struktur der ultravioletten Quecksilberlinien. Phys. Zeitschr. 18, 155-158.

Gamgee A. and A. Croft Hill (1903) On the optical activity of hæmoglobin and globin. Proc. Royal Soc. 71, 376-385.

Gamgee A. and W. Jones (1903, 1904) On the nucleoproteids of the pancreas, thymus, and suprarenal gland, with especial reference to their optical activity. Proc. Royal Soc. 71, 385-397 (see also their paper with the same title in Am. J. Physiol. 8, 447-455). On the optical activity of the nucleic acid of the thymus gland. 72, 100-103.

Gans R. (1920) Ultramikroskopische Studien. Methoden zur Formbestimmung subultramikroskopischer Teilchen. Ann. Phys. 62, 331-357. Uses polarization of scattered light.

Gans R. (1921) Asymmetrie von Gasmolekeln. Ein Beitrag zur Bestimmung der molekularen Form. Ann. Phys. 65, 97-123.

Gans R. (1923) Das Tyndallphänomen in Flüssigkeiten. Zeitschr. Phys. 17, 353-397. More in 30, 231-239, 1924.

Garbe P. (1887) Recherches expérimentales sur le rayonnement. Ann. Fac. Sci. Toulouse 1 (2-3), 91 p. Extract in J. Phys. 5, 245-258, 1886.

Garboe A. (1918) Af dobbeltspatens historie. Fysisk Tidsskrift 1918, 163-165. See also a paper in Naturens Verden 18, 255-257, 1934.

Garboe A. (1949) Fra krystal-optikens barndom. Naturens Verden 33, 121-125. Also: Fra et besøg i Leiden. Bartholinernes studieby. 38, 224-232, 1954. Dobbeltspat fra forekomster udenfor Island, 38, 313-314, 1954. Et manuskript til Erasmus Bartholins afhandling om lysets dobbeltbrydning 1669, in: Fund og Forskning i det Kgl. Bibl. Samlinger 8, 15-23, 1961. Papers in Danish on Erasmus Bartholin and his relatives.

Garboe A. (1959, 1961) Geologiens Historie i Danmark (History of Geology in Denmark). I. Fra Myte til Videnskab. II. Forskere og Resultater. C.A. Reitzels Forlag, Copenhagen, 283 + 522 p.

Gårding L. (1989) History of the mathematics of double refraction. Arch. Hist. Exact Sci. 40, 355-385.

Gast W. (1917) Quantitative Untersuchungen über den Kohlenhydratstoffwechsel im Laubblatt. Zeitschr. Physiol. Chemie 99, 1-53.

Gatin-Gruzewska Z. (1904) Das reine Glykogen. Pflüger's Arch. Physiol. 102, 569-591.

Gattermann L. and A. Ritschke (1890) Ueber Azoxyphenoläther. Ber. Deutsch. Chem. Gesellsch. 23, 1738-1750.

Gaubert P. (1901) Sur les faces de dissolution de la calcite et sur les figures de corrosion des carbonates rhomboèdriques. Bull. Soc. Fr. Minéral. 24, 326-350.

Gaubert P. (1905) Cristaux liquides et liquids cristallins. Rev. Gén. Sci. 16, 983-993. See also his paper in Comptes Rendus Acad. Sci. Fr. 145, 722-725, 1907.

Gaubert P. (1912) De l'influence de la vitesse d'attaque de la calcite par les acides sur la forme des figures de corrosion de ce minéral. Comptes Rendus Acad. Sci. Fr. 155, 547-549.

Gaviola E. (1926) Die Abklingungszeiten der Fluorescenz von Farbstofflösungen. Ann. Phys. 81, 681-710. Also in Zeitschr. Phys. 35, 748-756. Uses Kerr cells.

Gaviola E. (1927) Ein Fluorometer. Apparat zur Messung von Fluoreszenz-Abklingungszeiten. Zeitschr. Phys. 42, 853-861.

Gaviola E. (1929) On time-lags in fluorescence and in the Kerr and Faraday effects. Phys. Rev. 33, 1023-1034.

Gaviola E. and P. Pringsheim (1924) Über die Polarisation der Natrium-Resonanzstrahlung in magnetischen Feldern. Zeitschr. Phys. 25, 367-377.

Gay-Lussac J.L. (1816) Expériences pour déterminer la quantité de strontiane contenue dans plusieurs espèces d´arragonite. Ann. Chim. 2, 176-182, transl. Ann. Phys. 54, 232-239, comments by F. Stromeyer are on p. 239-244.

Gayon U. (1877) Sur la transformation du sucre cristallisable en glucose inactif dans les sucres bruts de canne. Comptes Rendus Acad. Sci. Fr. 84, 606-609, more e.g. in 87, 407-408 and in 91, 993-995, 1880.

Gayon U. (1882) Recherches sur la formation du sucre réducteur dans les sucres bruts de canne. J. Pharm. 5, 440-446. The problem of cane sugar deterioration during transportation and storage is also discussed by C.A. Browne in J. Ind. Eng. Chem. 10, 178-190, 1918.

Gayon U. and G. Dupetit (1886) Sur un moyen nouveau d'empêcher les fermentations secondaires dans les fermentations alcooliques de l'industrie. Comptes Rendus Acad. Sci. Fr. 103, 883-885. More 885-887 and in 110, 865-868, 1890.

Geduld R. (1891) Ein neues Enzym, die Glykase. Chem. Centralbl. 62(II), 323-324.

Gehlhoff G. and H. Schering (1920) Über ein neues Photometer sehr hoher Empfindlichkeit und einige Anwendungen. Zeitschr. Techn. Physik 1, 247-256.

Gehrcke E., ed. (1927) Handbuch der Physikalischen Optik I-II. J.A. Barth, Leipzig, 957 + 807 p.

Geiger L. (1907) Über die Begleiterscheinungen des inversen longitudinalen Zeemaneffektes. Ann. Phys. 23, 758-794.

Geoffroy É.F. (1741) Tractatus de Materia Medica. Tomus Primus. De Fossilibus. Desaint & Saillant, Paris, 197 + 317 p.

Gerber -. (1896) Récentes études sur les essences et parfums naturels ou artificiels. Moniteur Scient. 47, 5-18, 98-117. Continued in 50, 707-729, 787-797, 1897, 53, 313-324, 1899, 54, 477-487, 853-867, 1899 and in later volumes.

Gerhard C.A. (1782) Versuch einer Geschichte des Mineralreichs, Part 2. C.F. Himburg, Berlin, 424 p.

Gerlach W. and O. Brezina (1924) Eine neue Methode zur direkten Messung des Intensitätsverhältnisses von Mehrfachlinien. Zeitschr. Phys. 22, 215-221.

Gerlach W. and O. Stern (1922) Der experimentelle Nachweis der Richtungsquantelung im Magnetfeld. Zeitschr. Phys. 9, 349-352, continued directly by: Das magnetische Moment der Silberatoms, 353-355.

Gernez D. (1864) Recherches sur le pouvoir rotatoire des liquides actifs et de leurs vapeurs. Ann. Sci. École Normale Sup. 1, 1-38. Extract in Comptes Rendus Acad. Sci. Fr. 58, 1108-1111.

Gernez D. (1866) Séparation des tartrates gauches et les tartrates droits, à la aide des solutions sursaturées. Comptes Rendus Acad. Sci. Fr. 63, 843. More in 66, 853-856, 1868.

Gernez D. (1887) Recherches sur l'application du pouvoir rotatoire à l'étude de certains composés qui se produisent dans les solutions d'acide tartrique. Comptes Rendus Acad. Sci. Fr. 104, 783-785.

Getman F.H. (1922) A spectrophotometric study of solutions of cupric chloride. J. Phys. Chem. 26, 217-246.

Gibbs J.W. (1882) Notes on the electromagnetic theory of light. I. On double refraction and dispersion of colors in perfectly transparent media. Am. J. Sci. 23, 262-275. II. On double refraction in perfectly transparent media which exhibit the phenomena of circular polarisation, 460-476.

Gibbs J.W. (1888) A comparison of the elastic and electrical theories of light with respect to the law of double refraction and the dispersion of colors. Am. J. Sci. 35, 467-475.

Gibbs J.W. (1889) A comparison of the electric theory of light and Sir W. Thomson´s theory of a quasi-labile ether. Am. J. Sci. 37, 129-144.

Gibson F. (1929) Germany's talking films. New York Times, 8 Dec., p. X5.

Gibson I.L. (1963) The Reydarfjordur acid volcanic centre of Eastern Iceland. Ph.D. thesis, University of London, 267 p.

Gibson K.S. and F.K. Harris (1927) The Lovibond color system I. Spectrophotometric analysis of the Lovibond glasses. Sci. Pap. Bur. Std. 22, 1-46.

Gibson K.S., H.J. McNicholas, E.P.T. Tyndall and M.K. Frehafer (1922) The spectral transmissive properties of dyes I. Sci. Pap. Bureau of Standards 18, 121-184 (no. 440).

Giemsa G. and J. Halberkann (1920) Nitro-und Amino-sulfonsäuren, Nitro- und Amino-basen einiger hydrierter China-Alkaloide. Ber. Deutsch. Chem. Gesellsch. 53, 732-750.

Gifford J.W. (1902) The refractive indices of fluorite, quartz and calcite. Proc. Royal Soc. 70, 329-340. More in A84, 193, 1910.

Gillett H.W. (1911) Temperature measurements in an experimental carborundum furnace. J. Phys. Chem. 15, 213-305.

Gillispie C.C. (1997) Pierre-Simon Laplace 1749-1827. Princeton University Press, Princeton, 322 p. Chapter on p. 209-215 is by R. Fox.

Girard A., rapporteur (1877) Les procédés saccharimétriques et le rendement des sucres bruts au raffinage. Moniteur Scient. 19, 357-380.

Girard J. (1875) La minéralogie microscopique. La Nature 3(I), 388-389, see also 1, 365 and 2(II), 341, 1874.

Giraud-Teulon M. (1875) Sur une nouvelle méthode et sur un nouvel instrument de télémétrie (mesure rapide des distances). Comptes Rendus Acad. Sci. Fr. 80, 1379-1381.

Gladstone J.H. (1864) On essential oils. Part 1. J. Chem. Soc. 17, 1-21.

Glan P. (1870) Ueber die Absorption des Lichtes. Ann. Phys. 141, 58-83.

Glan P. (1874) Über die Intensität des vom Glase reflectirten Lichtes. Monatsber. Akad. Wiss. Berlin 1874, 511-516.

Glan P. (1877) Ueber ein neues Photometer. Ann. Phys. 1, 351-360. Utilizes Nicol prisms. Improved by W. Zenker in Zeitschr. Instrumentenk. 4, 83-87, 1884.

Glan P. (1878) Ueber den Einfluss der Dichtigkeit eines Körpers auf die Menge des von ihm absorbirten Lichtes. Ann. Phys. 3, 54-82.

Glan P. (1880) Ueber einen Polarisator. Carl's Repertorium 16, 570-573, more in 17, 195, 1881. Much-used variety of Nicol prism.

Glan P. (1881) Ueber Apparate zur Untersuchung von Farbenempfindungen. Pflüger's Arch. Physiol. 24, 307-328. Two new instruments, see application in 39, 53-61, 1886.

Glan P. (1891) Ein Spectrosaccharimeter. Ann. Phys. 43, 441-448.

Glan P. (1893) Ueber die Änderung der Intensität des parallel der Einfallsebene polarisirten Lichtes durch Reflexion an Glas. Ann. Phys. 50, 590-594.

Glaser L. C. (1924) Metallographie im polarisierten Licht. Zeitschr. Techn. Phys. 5, 253-260.

Glattfeld J.W.E. and G.E. Miller (1920) The C4-saccharinic acids I. The resolution of dl-2,3-dioxybutyric acid into the optically-active components. The derivatives of these acids. J. Am. Chem. Soc. 42, 2314-2321. More in 43, 2675-2682, 1921.

Glazebrook R.T. (1878) An experimental investigation into the velocities of normal propagation of plane waves in a biaxal crystal, with a comparison of the results with theory. Proc. Royal Soc. 27, 496-502. Details in Phil. Trans. 170, 287-377, 1880.

Glazebrook R.T. (1880a) Double refraction and dispersion in Iceland spar: an experimental investigation, with a comparison with Huygens´ construction for the extraordinary wave. Phil. Trans. Royal Soc. 171, 421-449. Extract in Proc. Royal Soc. 29, 202-205, 1879. See Hastings.

Glazebrook R.T. (1880b) Notes on Nicol´s prism. Phil. Mag. 10, 247-254.

Glazebrook R.T. (1882) On the refraction of plane polarized light at the surface of a uniaxial crystal. Phil. Trans. Royal Soc. 173, 595-620. More in Proc. R.S. 34, 393-394, 1882-83, noting defects in his equipment.

Glazebrook R.T. (1883a) On polarizing prisms. Phil. Mag. 15, 352-362.

Glazebrook R.T. (1883b) On a spectrophotometer. Proc. Cambr. Philos. Soc. 4, 304-308. See favorable comments on this instrument by S. Lea in J. Physiol. 1885.

Glazebrook R.T. (1885) Report on optical theories. British Assoc. Report 55, 157-261. Extensive review.

Glazebrook R.T. (1888, 1889) On the application of Sir W. Thomson´s theory of a contractile aether to double refraction, dispersion, metallic reflexion, and other optical problems. Phil. Mag. 26, 521-540. On the reflexion and refraction of light at the surface of crystals on the quasi-labile aether theory. 28, 110-117, 1889.

Glazebrook R.T. (1903) Theoretical optics since 1840. A survey. Phil. Mag. 5, 537-543.

Glazebrook R.T. (editor, 1923) Dictionary of Applied Physics, vol. IV. Macmillan & Co., London, 914 p.

Glocker R. and W. Traub (1921) Das photographische Schwärzungsgesetz der Röntgenstrahlen. Phys. Zeitschr. 22, 345-352.

Glocker R. and W. Frohnmayer (1925) Über die röntgenspektroskopische Bestimmung des Gewichtsanteiles eines Elementes in Gemengen und Verbindungen. Ann. Phys. 76, 369-395.

Gmelin P. (1909) Der Zeemaneffekt einiger Quecksilberlinien in schwachen Magnetfeldern. Absolut gemessen. Ann. Phys. 28, 1079-1087.

Godard L. (1886) Double lunette photométrique à lumière polarisée. Soc. Phys. Séances 1886, 83-84. See also J. Phys. 5, 173-175. Advertised in Pellin 1889, 1899.

Goddard J.F. (1839) On the polarizing property of living animals and animal substances upon the rays of transmitted light. Proc. Zool. Soc. 7, 109-110.

Goddard J.F. (1842) Polarization of light. Mag. Sci. 3, 37-38, 68-69, 100-102, 113-114. Probably also by him: Apparatus for the polarization of light, 327-328.

C.P. Goerz Optische Anstalt (1922) Röhrenpolarisationsapparat. German patent no. 358994, 1 p.

Goldhammer D.A. (1892) Das Kerr'sche magnetooptische Phänomen und die magnetische Circularpolarisation nach der electrischen Lichttheorie. Ann. Phys. 46, 71-98. More in 65, 111-115, 1898.

Goldschmidt V. (1907) Ueber Composite, Composit-Zwillinge und Viellinge. Zeitschr. Kristallogr. 43, 347-355.

Goldschmidt V. (1913) Atlas der Krystallformen, vol. 2. Carl Winter, Heidelberg.

Goldschmidt V. and F.E. Wright (1903, 1904) Ueber Aetzfiguren, Lichtfiguren und Lösungskörper, mit Beobachtungen am Calcit. N. Jahrb. Mineral. Beilageb. 17, 355-390. Continued in Beilageb. 18, 335-376. Contains review of previous work.

Goldschmidt V.M. (1912) Über die Winkelveränderung der Krystalle bei tiefen Temperaturen. Zeitschr. Kristallogr. 51, 1-27.

Goldschmidt V.M. (1920) Compound of titanium and process for the manufacture of same. U.S. patent no. 1,348,129, 6 p. See also patents no. 1,343,447 and 1,343,469 granted in 1920, and 1,389,191 for a titanium pigment in 1921.

Goldstein R. (1986) Electro-optic devices in review. Lasers and Applications, April issue 1986, 6 p.

Goodwin H.M. and R.D. Mailey (1906) On the physical properties of fused magnesium oxide. Phys. Rev. 23, 22-30.

Goring C.R. and A. Pritchard (1837) Micrographia. Whittaker & Co., London, 231 p.

Goring C.R. and A. Pritchard (1838) Microscopic Illustrations of Living Objects, new ed. Whittaker & Co., London, 248 p. plus 4-p. List of new optical instruments constructed by A.P. A page of Addenda to the list is included in an 1840 reprint.

Göthlin G.F. (1913) Die doppelbrechenden Eigenschaften des Nervengewebes. Kungl. Sv. Vetenskapsakad. Handlingar 51(1), 92 p.

Göthlin G.F. (1925) Das Polarisationsanomaloskop, ein Apparat für die diagnostische Untersuchung des Farbensinns. Skand. Arch. Physiol. 46, 181-192.

Gottling P.F. (1923) The determination of the time between excitation and emission for certain fluorescent solids. Phys. Rev. 22, 566-573. Uses a Kerr cell.

Gouy L.G. (1876) Recherches photométriques sur les flammes colorées. Comptes Rendus Acad. Sci. Fr. 83, 269-272. More in 85, 70-72, 1877 and 86, 878-880, 1078-1080, 1878. Gouy L.G. (1879) Recherches photométriques sur les flammes colorées. Ann. Chim. 18, 5-101, includes description of polarization photometers. Gouy's results were found to be in excellent agreement with a theoretical analysis by R. Ladenburg and F. Reiche in Ann. Phys. 42, 181-209, 1913.

Govi G. (1860a,b) Note sur un photomètre analyseur. Comptes Rendus Acad. Sci. Fr. 50, 156-158. De la polarisation de la lumière par diffusion. 51, 360-361 and 669-670.

Govi G. (1880) Sur une nouvelle expérience destinée à montrer le sens de la rotation imprimée par les corps à la lumière polarisée. Comptes Rendus Acad. Sci. Fr. 91, 517-519.

Grabau M. (1938) Polarized light enters the world of everyday life. J. Appl. Phys. 9, 215-225. On Polaroid applications.

Graff K. (1931) Eine neue Kolorimeterform für Sternmessungen. Sitzungsber. Akad. Wiss. Wien 140(2a), 481-484. Numerous measurements are found in 142(2a).

Grailich J. (1853) Bestimmung der Zwillinge in prismatischen Krystallen mit Hilfe des polarisirten Lichtes. Sitzungsber. Akad. Wiss. Wien 10, 193-210. Theoretical continuation in 11, 817-841 and 12, 230-263, 1854.

Grailich J. (1856) Ueber die Brechung und Reflexion des Lichts an Zwillingsflächen optisch-einaxiger vollkommen durchsichtiger Medien. Denkschr. Akad. Wiss. Wien 9(2), 57-120 and 11(2), 41-59, see also Ann. Phys. 28, 203-214.

Grailich J. (1858) Krystallographisch-optische Untersuchungen. E. Hölzel, Wien, 236 p.

Grailich J. and F. Pekárek (1854) Das Sklerometer, ein Apparat zur genaueren Messung der Härte der Krystalle. Sitzungsber. Akad. Wiss. Wien 13, 410-436.

Gramont A. de (1909) Recherches sur les spectres de dissociation dans la partie visible et dans l'ultra-violet. Ann. Chim. 17, 437-477.

Gratacap L.P. (1907) The minerals of Iceland with a note on zeolitic occurrences and associations. Bull. N.Y. Mineralogical Club 1, no. 1, 1-9.

Grattan-Guinness I. (1990) Convolutions in French Mathematics, 1800-1840, vols. I-III. Birkhäuser, Basel, 1601 p.

Green G. (1842a,b) On the laws of reflexion and refraction of light at the common surface of two non-crystalline media. Trans. Cambr. Philos. Soc. 7, 1-24, 113-120. On the propagation of light in crystallized media. 7, 121-140.

Greenwood H.C. (1909) An approximate determination of the boiling points of metals. Proc. Royal Soc. A82, 396-408. More in A83, 483-491, 1910 and in Chemical News 104, 31-33, 42-45, 1911.

Greenwood J.N. (1918) Applications of optical pyrometry in steel works practice. Trans. Faraday Soc. 13, 295-308.

Grew N. (1681) Musæum Regali Societatis, or a Catalogue & Description of the Natural and Artificial Rarities Belonging to the Society and Preserved at Gresham Colledge. Printed for the Author, London, 386 p.

Griffin J.J. (1855) Catalogue of microscopes, microscopic objects, and apparatus for the polarisation of light. London, 16 p.

Griffiths J.H.E. (1934) The mean lives of excited neon atoms. Proc. Royal Soc. A143, 588-604. The mean lives of excited hydrogen atoms, A147, 547-555.

Grimaux E. (1881) Sur le pouvoir rotatoire de la codéine artificielle. Comptes Rendus Acad. Sci. Fr. 92, 1228-1229, see also 1140-1143 and Ann. Chim. 27, 273-288, 1882.

Grimaux E. and A. Arnaud (1891) Transformation de la cupréine en quinine. Comptes Rendus Acad. Sci. Fr. 112, 774-775. More in Bull. Soc. Chim. 7, 304-312, 1892.

Grimsehl E. (1905) Neue Apparate und Versuchsanordnungen für die Polarisation des Lichtes. Zeitschr. Phys. Chem. Unterricht 18, 321-331.

Groddeck A. v. (1883) Zur Kenntniss einiger Sericitgesteine, welche neben und in Erzlagerstätten auftreten. N. Jahrb. Mineral. Beilageb. 2, 72-138.

Grosse W. (1887) Ueber eine neue Form von Photometern. Zeitschr. Instrumentenk. 7, 129-145, continued in 8, 95-102, 129-135, 1888. See also H. Krüss in 8, 347-353 and A. Palaz in Lum. Électr. 31, 220-227, 1889.

Grosse W. (1890) Ueber Polarisationsprismen. Zeitschr. Instrumentenk. 10, 445-446. See also his paper in Verh. Gesellsch. Deutsch. Naturf. Ärzte 63(II), 33-36.

Grossmann H. and M. Wrechsner (1917) Über Drehungsumkehrung und anomale Rotationsdispersion. J. Prakt. Chemie 96, 125-165.

Grossfeld J. (1918) Bestimmung der Lactose in Gemischen mit Saccharose und Invertzucker. Zeitschr. Unters. Nahr.- Genussm. 35, 249-256.

Groth P. (1871) Ueber Apparate und Beobachtungsmethoden für krystallographisch-optische Untersuchungen. Ann. Phys. 144, 34-55.

Groth P. (1885, 1905) Physikalische Krystallographie, 2nd ed. W. Engelmann, Leipzig, 710 p. 4th ed., 811 p.

Groth P. (1926) Entwicklungsgeschichte der Mineralogischen Wissenschaften. J. Springer, Berlin, 261 p.

Grubenmann U. (1887) Einige Methoden und Ziele der neueren Petrographie. Verhandl. Schweiz. Naturf. Gesellsch. 70, 7-22.

Grumell E.-S. (1911) Observations comparées entre la vitesse des réactions et la fluidité du milieu. J. Chim. Phys. 9, 143-159.

Grünbaum F. (1903) Absorptionsmessungen an wässerigen Farbstofflösungen. Ann. Phys. 12, 1004-1011. See the preceding paper by Martens and Grünbaum.

Gruner G.S. (1775) Versuch eines Verzeichnisses der Mineralien des Schweizerlandes. Bern, 183 p.

Grünhut L. (1901) Die Pentosen und Pentosane. Zeitschr. Anal. Chemie 40, 542-560.

J. & W. Grunow (1856) Catalogue of achromatic microscopes, &c. New Haven, Conn., 8 p. and illustrations.

Grünwald J. (1902) Über die Ausbreitung elastischer und elektromagnetischer Wellen in einaxig-krystallinischen Medien. Sitzungsber. Akad. Wiss. Wien 111, 411-485.

Gsell H. (1916) Die spektralanalytische Identifikation der Phenole. Zeitschr. Anal. Chemie 55, 417-426.

Gubbe O. (1885) Ueber das optische Drehungsvermögen des Invertzuckers. Ber. Deutsch. Chem. Gesellsch. 18, 2207-2219.

Gudmundsson A.T. (2003) Chapter in: Steinuð hús (Roughcast Buildings). Húsafridunarnefnd ríkisins, Report no. 6, 22-26.

Guichard -. (1892) Dosage de l'amidon et action des acides étendus sur la cellulose. Bull. Soc. Chim. 7, 554-560.

Guldberg C.M. and P. Waage (1864) Studier over affiniteten I-III. Forhandlinger i Videnskabsselskabet i Christiania 1864, 35-45, 92-94, 111-120. These papers which introduce their Law of Mass Action, may in part have been based on the polarimeter studies of reaction kinetics made by Wilhelmy 1850. See however Ostwald 1884.

Gullstrand A. (1906) Die Farbe der Macula centralis retinae. Graefe's Arch. Ophthalmol. 62, 1-72.

Gümbel C.W. (1880) Das Verhalten der Schichtgesteine in gebogenen Lagen. Sitzungsber. Bayer. Akad. Wiss., Math.-Phys. Klasse, 4, 596-623. Extract in N. Jahrb. Mineral. 1882(1), 221-223. On deformation of calcite and other materials.

Gumlich E. (1894) Notiz über Auerbacher Kalkspath. Zeitschr. Instrumentenk. 14, 54.

Gumlich E. (1896) Optisches Drehungsvermögen des Quarzes für Natriumlicht. Zeitschr. Instrumentenk. 16, 97-115.

Gumlich E. (1898) Rotationsdispersion und Temperaturcoefficient des Quarzes. Ann. Phys. 64, 333-359.

Guthnick P. (1910) Ergebnisse aus photometrischen Messungen der Saturntrabanten.1. Beob.-Ergebn. Kön. Sternw. Berlin No. 14, 65 p.

Gutton C. (1911a) Comparaison des vitesses de propagation de la lumière et des ondes électromagnétiques le long des fils. Comptes Rendus Acad. Sci. Fr. 152, 685-688, and 153, 1002-1004. Uses Kerr cells.

Gutton C. (1911b) Expériences sur la vitesse de la lumière dans les milieux réfringents. Comptes Rendus Acad. Sci. Fr. 152, 1089-1091.

Guye C.-E. (1889) Sur la polarisation rotatoire du chlorate de soude. Arch. Sci. Phys. Nat. 22, 130-169. Extract in C.R. 108.

Guye Ph.-A. (1891) Étude sur la dissymétrie moléculaire. Arch. Sci. Phys. Nat. 26, 97-126, 201-228, 333-369. A similar paper also appears in Ann. Chim. 25, 145-226, 1892.

Guye Ph.-A. and L. Chavanne (1896) Étude sur la dissymétrie moléculaire. Deuxième mémoire. Arch. Sci. Phys. Nat. 1, 54-76, 121-158.

Haase M. (1936-39) Dichroitische Kristalle und ihre Verwendung für Polarisationsfilter. Zeiss Nachrichten, 2. Folge, 55-64.

Hachette J.N.P. (1833) L'appareil de polarisation que M. Noremberg, professeur de physique, a imaginé... Bull. Soc. Philom. 1833, 86-87.

Haensch H. (1889) Die Schwierigkeiten bei Beschaffung von Doppelspath. Zeitschr. Instrumentenk. 9, 391-393.

Hagalín G. Gíslason (1970) Eldur er beztur. Biography of the mining engineer H.H. Eiríksson who was in charge of re-opening the Helgustadir Iceland spar quarry in 1920-25. Idunn, Reykjavík, 283 p.

Hagen E. and H. Rubens (1910) Über die Änderung des Emissionvermögens der Metalle mit der Temperatur im kurzwelligen ultraroten Spektrum. Sitzungsber. Akad. Wiss. Berlin 1910(I), 467-487.

Hagen G. (1925) Versuche über den Comptoneffekt. Ann. Phys. 78, 407-420.

Hagen O. (1859) Ueber die Absorption des Lichtes in Krystallen. Ann. Phys. 106, 33-55.

Hagenbach E. (1882, 1890) Le grain du glacier. Arch. Sci. Phys. Nat. 8, 343-366 and 23, 373-390.

Hahn T.M. (1934) The absorption of monochromatic X-rays of short wave-length. Phys. Rev. 46, 149-153.

Haidinger W. (1844) Ueber das directe Erkennen des polarisirten Lichts und der Lage der Polarisationsebene. Ann. Phys. 63, 29-39. Discovery of "Haidinger´s brushes". Mentions his dichroscope, and shows a simple diagram of it in a paper on p. 147-152.

Haidinger W. (1845) Ueber den Pleochroismus der Krystalle. Ann. Phys. 65, 1-30. Describes his dichroscope and its use. More: Ueber die dichroskopische Loupe, Sitzungsber. Akad. Wiss. Wien 1, 70-75, 1848.

Haidinger W. (1853) Über die von Herrn Dr. Herapath und Herrn Prof. Stokes in optischer

Beziehung untersuchte Jod-Chinin-Verbindung. Ann. Phys. 89, 250-258. More on herapathite in 90, 616-622.

Haidinger W. (1855a) Die Richtung der Schwingungen des Lichtaethers im polarisirten Lichte. Ann. Phys. 172, 287-305. See also Sitzungsber. Akad. Wiss. Wien 15, 6-17, 86-90. An earlier note appeared in Sitzungsber. 8, 52-63, 1852.

Haidinger W. (1855b) Herapathit-Zangen, geschenkt von Herrn Professor v. Nörrenberg. Sitzungsber. Akad. Wiss. Wien 15, 82-85.

Haiser F. and P. Wenzel (1909) Über Karnin und Inosinsäure. III. Monatsh. Chemie 30, 377-386. See also IV in 31, 357-361, 1910.

Hakenbeck E. (1929) Über polarisierte Fluorescenz. Ann. Phys. 1, 457-496.

Hale G.E. (1908) On the probable existence of a magnetic field in sunspots. Astrophys. J. 28, 315-343. Observations of Zeeman effect, see also Smithsonian Inst. Report 1908.

Hale G.E. (1913) Preliminary results of an attempt to detect the general magnetic field of the Sun. Astrophys. J. 38, 27-98. Continuation by F.H. Seares on equipment, 99-125.

Hale G.E. and S.B. Nicholson (1925) The law of sun-spot polarity. Astrophys. J. 62, 270-300. Preliminary version in Nature 113 (Suppl.), 105-112, 1924.

Hall A.R. (1993) All was Light. An Introduction to Newton´s *Opticks*. Clarendon Press, Oxford, 252 p.

Hall E.H. (1881) On the "rotational coefficient" in nickel and cobalt. Phil. Mag. 12, 157-172. Continued in 15, 341-346, 1883.

Hall T.P. (1892) Direct reflecting polariscopes. Science 19, 323. See also a description by O. Knipe in 22, 272, 1893 of a projector using this type of polarizer.

Halle B. (c. 1895) Preis-Liste von Bernhard Halle Optische Werkstatt, Steglitz bei Berlin. 19 p. Large selection of prisms, plates etc. from calcite, quartz etc.

Halle B. (1896, 1908) Ueber Herstellung Nicol'scher Prismen. Beiblatt Zeitschr. Instrumentenk. 1896, 143-145. Über Polarisationsprismen, 1908, 6-7 and 16-19.

Halle B. (1921) Handbuch der Praktischen Optik, 2nd ed. Verlag Zeitschr. f. Feinmechanik, Berlin, 136 p.

B. Halle Nachfolger (c. 1930) Katalog 6. Berlin-Steglitz, 112 p.

B. Halle Nachfolger (1963) 90 Jahre im Dienste der Optik. Berlin-Steglitz, 85 p.

Halle G. (1910) Neuer Hand-Demonstrationsapparat für alle Erscheinungen der Doppelbrechung im Kalkspat. Zeitschr. Kristallogr. 47, 376-377.

Haller A. (1892) Contribution à l´étude des camphols et des camphres. Ann. Chim. 27, 392-432.

Haller A. (1896) Sur la transformation de l'acide camphorique droit en camphre droit: synthese partielle du camphre. Comptes Rendus Acad. Sci. Fr. 122, 446-449.

Haller A. (1897) Revue des progrès accomplis dans l'industrie des essences et des parfums. Bull. Soc. Encouragem. 2, 14-46, 356-383.

Haller A. (1909) Camphre naturel et camphre artificiel. Rev. Sci. 47, 449-455.

Hallimond A.F. (1944) Use of "Polaroid" for the microscope. Nature 154, 369-371.

Hallimond A.F. and E.W. Taylor (1946) An improved polarizing microscope. Mineral. Mag. 27, 175-185. Continued in vols. 28 and 29.

Hamberg A. (1890, 1895) Bemerkungen über den Einfluss, welchen die Konzentration des Ätzmittels auf die Umgestaltung eines Krystalles beim Ätzen ausübt. Geol. Fören. Förh. 12, 617-632. Etsförsök på kalkspat. 17, 53-73 and 453-473.

Hamilton B.M. (1992) The influence of the polarising microscope on late nineteenth century geology. Janus 69, 51-68.

Hamilton F. (1922) A Review of Mining in California during 1921. California State Mining Bureau, San Francisco. Preliminary Report no. 8, 68 p.

Hámos L. v. (1930) Optische Untersuchung der Funkenzündung in Luft von Atmosphärendruck mittels des Kerreffektes. Ann. Phys. 7, 857-888.

Hanawalt J.D. (1931) Der Einfluss der Temperatur auf die K-Absorption des Eisens. Zeitschr. Phys. 70, 293-305.

Hankel W.G. (1862) Messungen über die Absorption der chemischen Strahlen des Sonnenlichtes. Abh. Sächs. Gesellsch. Wiss. 6, 54-90.

Hanle W. (1924) Über magnetische Beeinflussung der Polarisation der Resonanzfluoreszenz. Zeitschr. Phys. 30, 93-105.

Hanle W. (1926) Die elektrische Beeinflussung der Polarisation der Resonanzfluoreszenz von Quecksilber. Zeitschr. Phys. 35, 346-364.

Hanle W. (1931) Über eine Anomalie bei der Polarisation der Ramanstrahlung. Naturwissensch. 19, 375. See also a note by R. Bär on p. 463.

Hansen G. (1925) Die Feinstruktur der Balmerlinien. Ann. Phys. 78, 558-600.

Hantzsch A. and A. Werner (1890) Ueber räumliche Anordnung der Atome in stickstoffhaltigen Molekülen. Ber. Deutsch. Chem. Gesellsch. 23, 11-30. More in 1243-1253, 2764-2769 and 2769-2773.

Hantzsch A. and W.H. Glover (1906) Ueber Veränderung der Farbe bei constitutiv unveränderlichen Stoffen. Ber. Deutsch. Chem. Gesellsch. 39, 4153-4174.

Hanus J. and F. Bien (1906) Zur Kenntnis der Zuckerarten der Gewürze. I. Weisser Zimt. Zeitschr. Unters. Nahr.- Genussm. 12, 395-407.

Harden A. and W.J. Young (1902) Glycogen from yeast. J. Chem. Soc. Trans. 81, 1224-1233, see also their paper in 101, 1928-1930, 1912.

Harden A. and W.J. Young (1913) The enzymatic formation of polysaccharides by yeast preparations. Biochem. J. 6, 630-636.

Harden A. and S.S. Zilva (1914) The enzymes of washed zymin and dried yeast (Lebedeff). III. Peroxidase, catalase, invertase and maltase. Biochem. J. 8, 217-226.

Harding T.S. (1922) The preparation of fructose. J. Am. Chem. Soc. 44, 1765-1768.

Hardy A.C. (1935) A new recording spectrophotometer. J. Opt. Soc. Am. 25, 305-311.

Hardy A.C. (1938) History of the design of the recording spectrophotometer. J. Opt. Soc. Am. 28, 360-364. J.L. Michaelson's description of the instrument follows on p. 365-371.

Hári P. (1917) Beiträge zur Lichtabsorption des Oxyhämoglobins. Biochem. Zeitschr. 82, 229-281. More in 95, 257-265, 1919 and later.

Harkányi B. (1902) Ueber die Temperaturbestimmung der Fixsterne auf spectral-photometrischem Wege. Astron. Nachr. 158, 17-24. More theory in 185, 33-48, 1910.

[Harley G.] (1865) Prof. Harley's compendiöses Mikroskop. Arch. Mikrosk. Anat. 1, 440-442.

Harrington W.F., P. Johnson and R.H. Ottewill (1956) An improved method for measuring degree of polarization. Biochem. J. 63, 349-352. See also Weber 1952.

Harrison W. (1918) Investigations on textile fibres. Proc. Royal Soc. A94, 460-469.

Hartley W.N. (1881) On the absorption of solar rays by atmospheric ozone. J. Chem. Soc. Trans. 39, 111-128.

Hartley W.N. (1882) Note on certain photographs of the ultra-violet spectra of elementary bodies. J. Chem. Soc. Trans. 41, 84-90.

Hartley W.N. (1883) Description of the instruments and processes employed in photographing ultraviolet spectra. Sci. Proc. Royal Dublin Soc. 3, 93-107.

Hartnack E. and A. Prazmowski (1866) Prisme polarisateur. Ann. Chim. 7, 181-189. Popular type of Nicol´s prism.

Hartshorne N.H. and A. Stuart (1950) Crystals and the Polarising Microscope, 2nd ed. E. Arnold, London, 473 p. Covers e.g. work on cements, slags, and refractories.

Hasert B. (1861) Verbesserte Construction des Nicol´schen Prismas. Ann. Phys. 113, 188-190.

Hassenstein W. (1932) Untersuchungen über einige halbregelmässige veränderliche Sterne. Publ. Astrophys. Observ. Potsdam 26(4) no. 87, 76 p. See also no. 85, 1927.

Hastings C.S. (1888) On the law of double refraction in Iceland spar. Am. J. Sci. 35, 60-73. Improvement on the study by Glazebrook in 1880.

Hattwich J. (1913) Über den Zusammenhang zwischen der Intensität des Fluoreszenzlichtes und der des erregenden Lichtes. Sitzungsber. Akad. Wiss. Wien 122(2a), 1829-1834.

Hauer F.v. and J.v. Kowalski (1914) Zur Photometrie der Lumineszenzerscheinungen. Phys. Zeitschr. 15, 322-327.

Hauschild H. (1920) Beiträge zur Kenntnis der Oberflächenschichten auf Metallen. Ann. Phys. 63, 816-844.

Haushofer K. (1865) Ueber den Asterismus und die Brewster´schen Lichtfiguren am Calcit. Habilitationsschrift. M. Rieger, München, 44 p.

Haushofer K. (1883) Beiträge zur mikroskopischen Analyse. Sitzungsber. Bayer. Akad. Wiss. 13, 436-448.

Hauswaldt H. (1904) Interferenz-erscheinungen im polarisirten Licht. J.G. Hauswaldt, Magdeburg, 29 p. and 80 plates.

Hautefeuille P. (1880) Sur la réproduction de quelques minéraux et sur une nouvelle méthode pour obtenir les combinaisons cristallisées par la voie sèche. Ann. École Normale 9, 363-408.

Hauy R.J. (1782) Extrait d´un mémoire sur la structure des spaths calcaires. J. Phys. 20, (Observations sur …..), part 2, 33-39.

Hauy R.J. (1784) Essai d´une Théorie sur la Structure des Crystaux. Gogué & Née, Paris, 236 p. A reprint of a shorter paper in J. Hist. Nat., Exposition abrégée de la théorie sur la structure des cristaux, was published in Paris 1792, 52 p.

Hauy R.J. (1785) Mémoire sur les propriétés électriques de plusieurs minéraux. Mém. Acad. Sci. 1785, 206-209.

Hauy R.J. (1788) Mémoire sur la double réfraction du spath d´Islande. Mém. Acad. Sci. 1788, 34-61, published 1791. Also in Ann. Chim. 17.

Hauy R.J. (1792) Sur la double réfraction du spath calcaire transparent. J. Hist. Nat. 1, 63-80 and 2, 157-175. Reprinted in Séances École Normale 3 (App.), 1-16, 16-30, 1801.

Hauy R.J. (1793a) Sur la double réfraction de plusieurs substances minérales. Ann. Chim. 17, 140-156. A note of the same title appeared in Mém. Soc. d'Hist. Nat. 1799, 25-27.

Hauy R.J. (1793b) Exposition de la théorie sue la structure des cristaux. Ann. Chim. 17, 225-319. Translaution in Phil. Mag. 1, 35-46, 153-169, 287-303, 376-392, 1798.

Hauy R.J. (1796) Exposé d'une méthode simple et facile pour représenter les différentes formes cristallines par des signes très-abrégés, qui expriment les lois de décroissement auxquelles est soumise la structure. J. Mines no. 23, 15-36. Translation in Phil. Mag. 2, 398-413, 1799.

Hauy R.J. (1801) Traité de Minéralogie, vols. 1-5. Conseil des Mines, Paris, 494 + 617 + 588 + 592 p. and 86 plates.

Hauy R.J. (1803) Traité Élémentaire de Physique I-II. 426 + 447 p., Paris.

Hauy R.J. (1815) Mémoire sur une loi de la cristallisation, appelée loi de symétrie. Mém. Mus. Nat. Hist. Nat. 1, 81-101, 206-225, 273-298, 341-352, extract in Bull. Soc. Philom., Ser. 2, 32-34.

Hauy R.J. (1817) Sur l´électricité produite dans les minéraux à l´aide de la pression. Ann. Mines 2, 59-64. Edited extract on p. 244-250 of Hauy 1822. Includes spath d´Islande.

Hauy R.J. (1822) Traité de Minéralogie, vol. 1, 2nd edition. Bachelier, Paris, 594 p.

Havens W.W., L.J. Rainwater, C.S. Wu and J.R. Dunning (1948) Slow neutron velocity spectrometer studies of Cu, Ni, Bi, Fe, Sn, and calcite. Phys. Rev. 73, 963-972.

Havighurst R.J. (1926) The intensity of reflection of X-rays by powdered crystals II. The effect of crystal size. Phys. Rev. 28, 882-890. See also Proc. Nat. Acad. Sci. 12, 375-380 and 477-479 where he mentions the narrowness of beams reflected from calcite.

Haworth W.N. (1920) The constitution of the disaccharides. Part IV. The structure of the fructose residue in sucrose. J. Chem. Soc. Trans. 117, 199-208.

Haworth W.N. (1929) The Constitution of Sugars. E. Arnold & Co., London, 100 p.

Haworth W.N. (1932) Die Konstitution einiger Kohlenhydrate. Ber. Deutsch. Chem. Gesellsch. 65A, 43-65.

Haworth W.N. and J. Law (1916) The constitution of the disaccharides. Part I. The structure of sucrose. J. Chem. Soc. Trans. 109, 1314-1325.

Haworth W.N. and E.L. Hirst (1921) The constitution of the disaccharides. V. Cellobiose (cellose). J. Chem. Soc. Trans. 119, 193-201.

Haworth W.N. and E.L. Hirst (1926) The structure of fructose, γ-fructose, and sucrose. J. Chem. Soc. 1926, 1858-1868.

Haworth W.N. and E.L. Hirst (1930) The structure of carbohydrates and their optical rotatory power. Part I. General introduction. J. Chem. Soc. 1930, 2615-2635.

Haworth W.N., E.L. Hirst and D.A. Ruell (1923) The constitution of raffinose. J. Chem. Soc. Trans. 123, 3125-3131.

Hecht S. (1924) Photochemistry of visual purple. III. J. Gen. Physiol. 6, 731-740.

Hecht S. and R.E. Williams (1922) The visibility of monochromatic radiation and the absorption spectrum of visual purple. J. Gen. Physiol. 5, 1-33.

Hecht S. and S. Shlaer (1936) The color vision of dichromats. J. Gen. Physiol. 20, 57-82.

Hedenburg O.F. (1915) On the esters, as well as the monomolecular β- and γ-lactones, of d-mannonic and d-gluconic acids;... J. Am. Chem. Soc. 37, 345-372.

Heele H. (1900) Preis-Verzeichnis der Werkstätten für Präzisions-optik und Mechanik. Berlin, 32 p. and separate booklet with illustrations.

Heidelberger M. and W.A. Jacobs (1919) Syntheses in the cinchona series. I. The simpler cinchona alkaloids and their dihydro derivatives. J. Am. Chem. Soc. 41, 817-833.

Heidenhain H. (1896) On the determination of carbon dioxide by absorption. J. Am. Chem. Soc. 18, 1-7.

Henry Heil Chemical Company (c. 1903) Illustrated Catalogue and Price List of Chemical Apparatus....St. Louis, Mo., 521 p.

Heinemann P.G. (1907) The kinds of lactic acid produced by lactic acid bacteria. J. Biol. Chem. 2, 603-612.

Helferich B. and H. Bredereck (1928) Zuckersynthesen VIII. Liebig's Ann. Chemie 465, 167-184.

Helland A. (1884) Studier over Islands petrografi og geologi. Archiv f. Mathematik og Naturvidenskab 9, 69-154 (short description of the calcite quarry at Helgustadir on p. 152-154, Pl. III).

Hellerich J. (1937) Visuelle Photometrie. In: Wien-Harms Handbuch der Experimentalphysik, vol. 26 (Astrophysik, ed. B. Strömgren), 565-646.

Helmholtz H. (1851) Beschreibung eines Augen-Spiegels zur Untersuchung der Netzhaut im lebenden Auge. A. Förstner, Berlin, 43 p.

Helmholtz H. (1875) Zur Theorie der anomalen Dispersion. Ann. Phys. 154, 582-596.

Helmholtz H. v. (1892) Elektromagnetische Theorie der Farbenzerstreuung. Sitzungsber. Akad. Wiss. Berlin 1892(II), 1093-1109.

Helmick P.S. (1918) The variation in the blackening of a photographic plate with time of exposure, total energy remaining constant. Phys. Rev. 11, 372-375. More in 17, 135-146, 1921.

Hendricks S.B. and R.W.G. Wyckoff (1927) The positions of the K-absorption limits of vanadium in various of its compounds. J. Phys. Chem. 31, 703-712.

Henri V. (1901) Über das Gesetz der Wirkung des Invertins. Zeitschr. Physikal. Chemie 39, 194-216. See also his papers in C.R. 133, 891-894, 1901 and 135, 916-919, 1902.

Henri V. (1903) Lois Générales de l'Action des Diastases. A. Hermann, Paris, 129 p.

Herapath W.B. (1853) On the manufacture of large available crystals of sulphate of iodo-quinine (herapathite) for optical purposes as artificial tourmalines. Phil. Mag. 6, 346-351. More in 7, 352-357, 1854 and 9, 366-370, 1855.

Hering E. (1890) Eine Methode zur Beobachtung des Simultancontrastes. Pflüger's Arch. Physiol. 47, 236-242. See also Pulfrich 1925.

Hering E. (1905-20) Grundzüge der Lehre vom Lichtsinn. Published in six installments by W. Engelmann, Leipzig, 294 p. Referred to in a 1921 Spindler & Hoyer catalog which offers psychological testing apparatus including Hering's polariphotometer.

Hérissey H. (1921) Action synthésisante de la méthyl-d-mannosidase α. Comptes Rendus Acad. Sci. Fr. 172, 1536-1539. More in 173, 1406-1407.

Hérissey H. and C. Lefebvre (1907) Ueber das Vorkommen der Raffinose in Taxus bacata. Arch. Pharmazie 245, 481-485.

Heron J. (1888) The polariscope and its applications to brewing. J. Soc. Chem. Ind. 7, 259-276.

Herring P.T., J.C. Irvine and J.J.R. Macleod (1924) The efficiency of various sugars and their derivatives in relieving the symptoms caused by insulin in mice. Biochem. J. 18, 1023-1042.

Herschel J.F.W. (1820) On the action of crystallized bodies on homogeneous light, and on the causes of the deviation from Newton´s scale in the tints which many of them develop on exposure to a polarised ray. Phil. Trans. Royal Soc. 110, 45-100.

Herschel J.F.W. (1822) On the rotation impressed by plates of rock crystal on the planes of polarization of rays of light, as connected with certain peculiarities in its crystallization. Trans. Cambr. Philos. Soc. 1, 43-52. Extract in Ann. Phys. 21, 288-290, 1831. See also a paper by H.W. Dove in Ann. Phys. 40, 607-621, 1837.

Herschel J.F.W. (1833) On the absorption of light in coloured media, viewed in connexion with the undulatory theory. Phil. Mag. 3, 401-412.

Herschel W. (1800) Experiments on the solar, and on the terrestrial rays that occasion heat; with a comparative view of the laws to which light and heat, or rather the rays which occasion them, are subject, in order to determine whether they are the same, or different. Phil. Trans. Royal Soc. 90, 437-538.

Hertel K.L. (1927) A study of the polarization of light from hydrogen canal rays. Phys. Rev. 29, 848-856.

Herty C.H. (1908) The optical rotation of spirits of turpentine. J. Am. Chem. Soc. 30, 863-867.

Hertz H. (1888) Über Strahlen elektrischer Kraft. Sitzungsber. Akad. Wiss. Berlin 1888(II), 1297-1307.

Herzfeld A. (1890) Die Bestimmung des Zuckergehaltes der Handelswaare. Zeitschr. Verein Rübenzuckerind. 40, 167-214.

Herzog A. (1909) Zur Kenntnis der Doppelbrechung der Baumwollfaser. Kolloid-Zeitschr. 5, 246-248.

Herzog A. (1916) Die Unterscheidung von Baumwolle und Leinen. English Translation: The Determination of Cotton and Linen. Columbia University, Teachers College Bull. 5, 52 p.

Hesse O. (1876) Studien über das Drehungsvermögen der wichtigeren Chinaalkaloide. Liebig´s Ann. Chemie 182, 128-159. He wrote at least a hundred papers on alkaloids.

Hesse O. (1878) Ueber Phytosterin und Cholesterin. Liebig's Ann. Chemie 192, 175-179.

Hesse O. (1894) Zur Kenntniss der Cocablätter. Liebig's Ann. Chemie 271, 180-228.

Hesse O. (1896) Zur Kenntniss des Hyoscins. Ber. Deutsch. Chem. Gesellsch. 29, 1771-1776. More 1776-1785 and 2439-2442.

Hesse O. (1900) Beitrag zur Kenntniss der Flechten und ihrer characteristischen Bestandtheile. IV. J. Prakt. Chemie 62, 321-363.

Hessenberg F. (1866, 1872, 1874) Mineralogische Notizen (on Iceland spar from Helgustadir). Abhandlungen der Senckenb. Naturf. Gesellsch. Notiz no. 7 in Band 6, 1-4, Notiz no. 11 in Band

8, 415-423, and Notiz no. 12 in Band 10, 13-16 (posthumous). See also comments by A. Purgold 1881.

Hevesy G. v. and S. Böhm (1927) Die quantitative Bestimmung des Tantals auf röntgenspektroskopischem Wege. Zeitschr. Anorg. Chemie 164, 69-80.

Heymans P. (1922) Photo-elasticity and its application to engineering problems. The Tech Engineering News, June issue, 80-85.

Higel F. (1883) Glucose and grape sugar. Manufacturer and Builder 15, p. 18 and 46.

Highley S. (1856) Contributions to micro-mineralogy. Quart. J. Microsc. Soc. 4, 220-224 and 277-286.

Hildebrand J. (1908) Das Königsche Spektralphotometer in neuer Anordnung, und seine Verwendung zur Bestimmung chemischer Gleichgewichte. Zeitschr. Elektrochem. 14, 349-353.

Hildebrandt G. (1995) Early experimental proofs of the dynamical theory. J. Phys. D: Appl. Phys. 28, A8-A16.

Hildebrandt G. (2002) How discoveries are made – or some remarks on the discovery of the Borrmann effect. Crystal Res. Technol. 37, 777-782.

Hill A. Croft (1898) Reversible zymohydrolysis. J. Chem. Soc. Trans. 73, 634-658.

Hill A. Croft (1903) Reversibility of enzyme or ferment action. J. Chem. Soc. Trans. 83, 578-598.

Hill B.V. (1899) Accidental double refraction in liquids. Phil. Mag. 48, 485-498.

Hill J. (1748) A General Natural History. Vol. 1, A History of Fossils. T. Osborne, London, 654 p. See also his History of the Materia Medica 1751, p. 280.

Hill J. (1772) Spatogenesia. The Origin and Nature of Spar...P. Elmsly, London, 64 p.

Hiller A. (1917) The identification of the pentose in a case of pentosuria. J. Biol. Chem. 30, 129-134.

Hiltner R.S. and R.W. Thatcher (1901) An improved method for the estimation of sugar in beets. J. Am. Chem. Soc. 23, 299-318.

Hinrichsen F.W. (1901, 1902) Über das Verbindungsgewicht des Calciums. Zeitschr. Physikal. Chemie 39, 311-322 and 40, 746-749. Uses Iceland spar as raw material.

Hinton C.L. (1930) Sugar analysis. Chapter I in Recent Advances in Analytical Chemistry, vol. I, ed. C. Ainsworth Mitchell, p. 1-53. J. & A. Churchill, London.

Hintze C. (1930) Handbuch der Mineralogie, ed. G. Linck, Erster Band, Dritte Abteilung, Erste Hälfte. Nitrate, Jodate, Karbonate, Selenite, Tellurite, Manganite, Plumbate, 2675-3656. W. de Gruyter & Co., Berlin and Leipzig.

Hirschwald J. (1904) Ueber ein neues Mikroskopmodell und ein “Planimeter-Ocular” zur geometrischen Gesteinsanalyse. Centralbl. Mineral. 1904, 626-633.

Hitchins A.B. (1917) Maintaining photographic standards. J. Franklin Inst. 184, 179-203.

Hobbs W.H. (1900) Suggestions regarding the classification of the igneous rocks. J. Geol. 8, 1-31.

Hochstetter F. (1854) Das Kalkspath-System, seine Deduction und Projection nebst einer Vergleichung mit der Entwickelung des Tesseral-Systems in rhomboëdrischer Stellung. Denkschr. Akad. Wiss. Wien 6(2), 89-124. Extract in Sitzungsber. 9, 830-833, 1852.

Hoff J.H. van´t (1874) Sur les formules de structure dans l´espace. Arch. Néerl. 9, 445-454. Famous paper on the tetrahedral configuration of the chemical bonds of carbon, discovered independently by Le Bel in the same year. A shorter version appeared in Bull. Soc. Chim. 23, 295-301, 1875. Further papers include: Ueber den Zusammenhang zwischen optischer Aktivität und Constitution. Ber. Deutsch. Chem. Gesellsch. 10, 1620-1623, 1877.

Hoff J.H. van’t (1877) Die Lagerung der Atome im Raume. Vieweg, Braunschweig, 53 p.

Hoffell G. Jonsson (1946) Skaftfellskar þjóðsögur og sagnir ásamt sjálfsævisögu höfundar. (Folk tales and autobiographical notes, including information on the Hoffell spar quarry, SE-Iceland). Akureyri, 324 p. See also a chapter by Helgi Gudmundsson in: Aldnir Hafa Ordid (ed. E. Davidsson) vol. 8, 239-278, and Arason 2004.

Hoffman E.J. and V.P. Hawse (1919) The nitration of sucrose: sucrose octanitrate. J. Am. Chem. Soc. 41, 235-247.

Hoffmann E. and A. Jenkner (1932) Die Inkohlung und ihre Erkennung im Mikrobild. Glückauf 68, 81-88. Translation in Fuel 12, 98-106.

Hoffmann F. and W. Meissner (1919) Über die relative Helligkeit schwarzer Strahlung beim Gold- und Palladiumschmelzpunkt. Ann. Phys. 60, 201-232.

Hogg J. (1854) The Microscope: its History, Construction, and Applications. The Illustrated London Library, London, 440 p. The 15th edition in 1898 was 704 p.

Holmes W.C. (1923) The spectrophotometric identification of dyes. I. Acid dyes of the Patent Blue type. Ind. Eng. Chem. 15, 833-836.

Honess A.P. (1918) On the etching figures of the dihexagonal alternating type. Am. J. Sci. 45, 201-221.

Hönig M. and S. Schubert (1886) Zur Kenntniss der Kohlenhydrate. I. Monatsh. Chemie 7, 455-483.

Hönig M. and L. Jesser (1888) Zur Kenntniss der Kohlenhydrate. III. Monatsh. Chemie 9, 562-578.

Hopkins F.G. (1900) On the separation of a pure albumin from egg-white. J. Physiol. 25, 306-330.

Hopkins F.G. (1929) On glutathione: a reinvestigation. J. Biol. Chem. 84, 269-320.

Hopkins R.H. (1928) The selective fermentation of glucose and fructose by brewer's yeast. Biochem. J. 22, 1145-1156.

Hoppe F. (1857) Ueber die Bestimmung des Eiweissgehaltes im Urine, Blutserum, Transsudaten mittelst des Ventzke-Soleil'schen Polarisationsapparates. Virchow's Arch. Pathol. Anat. 11, 547-560. More in 12, 480-481.

Hoppe F. (1858) Ueber die circumpolarisirende Eigenschaft der Gallensubstanzen und ihrer Zersetzungsproducte. Virchow's Arch. Pathol. Anat. 15, 126-141. More in J. Prakt. Chemie 89, 257-281, 281-283, 1863.

Hoppe-Seyler F. (1866) Beiträge zur Kenntniss der Diffusionserscheinungen. Med.-Chem. Unters., 1. Heft, 1-16.

Hoppe-Seyler F. and T. Araki (1895) Ueber die Einwirkung der bei Sauerstoffmangel im Harne ausgeschiedenen Milchsäure auf polarisirtes Licht und die Rotationswerthe activer Milchsäuren im Allgemeinen. Zeitschr. Physiol. Chemie 20, 365-376. For similar work on lactic acid in tissues, see a paper by J. Yoshikawa in 87, 382-417, 1913.

Hoskyns-Abrahall J.L. (1890) A visit to the calcite quarry in Iceland. Mineral. Mag. 9, 179-181.

Houben-Weyl (1955) Methoden der Organischen Chemie, 4th ed., editor E. Müller. Band III, Physikalische Forschungsmethoden. G. Thieme Verlag, Stuttgart, 954 + 1078 p.

Houstoun R.A. (1906) Untersuchungen über den Einfluss der Temperatur auf die Absorption des Lichtes in isotropen Körpern. Ann. Phys. 21, 535-573.

Houstoun R.A. (1908) A new spectrophotometer of the Hüfner type. Phil. Mag. 15, 282-287.

Houstoun R.A. (1918) A statistical survey of colour vision. Proc. Royal Soc. A94, 576-586. Continued in A102, 353-360, 1922.

Houstoun R.A. (1927) A Treatise on Light. 5th ed. Longmans, Green & Co., London, 489 p.

Houstoun R.A. and A.R. Brown (1911) The absorption of light by inorganic salts. II. Aqueous solutions of cobalt salts in the visible spectrum. Proc. Royal Soc. Edinb. 31, 530-537.

Hovestadt H. (1900) Jenaer Glas und seine Verwendung in Wissenschaft und Technik. Gustav Fischer, Jena, 429 p. An English translation appeared in 1902.

Hudson C.S. (1908) The inversion of cane sugar by invertase. J. Am. Chem. Soc. 30, 1160-1166, 1564-1583.

Hudson C.S. (1909) The significance of certain numerical relations in the sugar group. J. Am. Chem. Soc. 31, 66-86.

Hudson C.S. (1910a) The quantitative determination of cane sugar by the use of invertase. J. Ind. Eng. Chem. 2, 143-146. See also e.g. J. Am. Chem. Soc. 32, 774-779.

Hudson C.S. (1910b) A review of discoveries on the mutarotation of the sugars. J. Am. Chem. Soc. 32, 889-894.

Hudson C.S. (1917) The forms of d-glucose and their mutarotation. J. Am. Chem. Soc. 39, 320-328. See also a paper by C.S.H. and E. Yanovsky, 1013-1038.

Hudson C.S. (1918) American sources of supply for the various sugars. J. Ind. Eng. Chem. 10, 176-178.

Hudson C.S. (1926) Relations between rotatory power and structure in the sugar group. Part I. Sci. Pap. Bur. Std. 21, 241-384.

Hudson C.S. and H.S. Paine (1909) The hydrolysis of salicin by the enzyme emulsin. J. Am. Chem. Soc. 31, 1242-1249.

Hudson C.S. and T.S. Harding (1914) The preparation of raffinose. J. Am. Chem. Soc. 36, 2110-2114. Improved by E.P. Clark in Sci. Pap. Bur. Standards 17, 607-610, 1922.

Hudson C.S. and T.S. Harding (1915) The estimation of raffinose by enzymotic hydrolysis. J. Am. Chem. Soc. 37, 2193-2198.

Hüfner G. (1877) Ueber quantitative Spectralanalyse und ein neues Spectrophotometer. J. Prakt. Chem. 16, 290-313. Uses Nicol prisms. For improvements, see J.G. Otto 1885.

Hüfner G. (1889) Über ein neues Spectrophotometer. Zeitschr. Physikal. Chemie 3, 562-571.

Hüfner G. and R. Külz (1883) Untersuchungen zur physikalische Chemie des Blutes. J. Prakt. Chem. 28, 256-269. More on this by G.H. in 30, 68-84, 1884.

Hüfner G. and E. Albrecht (1891) Ueber die Durchlässigkeit des Wassers für Licht von verschiedener Wellenlänge. Ann. Phys. 42, 1-17. See also a paper by G.H. in DuBois Reymond's Arch. Physiol. 1891, 88-102.

Huggins W. (1877) Note on the photographic spectra of stars. Proc. Royal Soc. 25, 445-446. Also in Comptes Rendus Acad. Sci. Fr. 83, 1229-1230, 1876.

Huggins W. (1880a) On the photographic spectra of stars. Phil. Trans. Royal Soc. 171, 669-690. Abstract in Proc. Royal Soc. 30, 20-22, 1879 and Nature 21, 269-270, 1880.

Huggins W. (1880b) Sur le spectre lumineux de l´eau. Comptes Rendus Acad. Sci. Fr. 90, 1455-1456.

Huggins W. (1889) On the limit of solar and stellar light in the ultra-violet part of the spectrum. Proc. Royal Soc. 46, 133-135.

Huggins W. (1895) The Tulse Hill ultra-violet spectroscope. Astrophys. J. 1, 359-365.

Huggins W. and M. Huggins (1890) On a new group of lines in the photographic spectrum of Sirius. Proc. Royal Soc. 48, 216-217.

Huggins W. and M. Huggins (1899) An Atlas of Representative Stellar Spectra. W. Wesley & Son, London.

Hughes A.L. (1916) On the velocities of the electrons emitted in the normal and selective photo-electric effects. Phil. Mag. 31, 100-107.

Hughes H.H. (1931, 1941) Iceland Spar and Optical Fluorite. U.S. Bureau of Mines Information Circular 6468, 17 p. Revised version issued as I.C. 6468R, 19 p.

Hughes H.H. (1937) Iceland spar and other crystals of related use. In: Industrial Minerals and Rocks, ed. S. H. Dolbear et al. Am. Inst. Mining, Metallurgical and Petroleum Engineers (AIME), 389-394.

Hughes R.E. and F.R.L. Wilson (1892) The action of dried hydrochloric-acid gas on Iceland spar. Phil. Mag. 34, 117-120.

Hupfeld H.-H. (1929) Die Nachleuchtdauern der J_2-, K_2-, Na_2- und Na- Resonanzstrahlung. Zeitschr. Phys. 54, 484-497.

Hurion A. (1896) Sur la polarisation de la lumière diffusée par les milieux troubles. Application à la polarisation atmosphérique. Ann. Chim. 7, 456-495. Preliminary notes in Comptes Rendus Acad. Sci. Fr. 112, 1431-1434, 1891 and 116, 795-797, 1893.

Hürthle K. (1909) Über die Struktur der quergestreiften Muskelfasern von Hydrophilus im ruhenden und tätigen Zustand. Pflüger's Arch. Physiol. 126, 1-164.

Hussak E. (1885) Anleitung zum Bestimmen der Gesteinbildenden Mineralien. W. Engelmann, Leipzig, 196 p. English translation in 1886 and 1891.

Hussell A. (1891) Ueber die Drehung ultrarother Strahlen im Quarz. Ann. Phys. 43, 498-508.

Hüttel A. (1940) Eine Methode zur Bestimmung der Lichtgeschwindigkeit unter Anwendung des Kerreffektes und einer Photozelle als phasenabhängigen Gleichrichter. Ann. Phys. 37, 365-402.

Huxley F. (1957) Das Interferenz-Mikroskop und seine Anwendung in der biologischen Forschung. Naturwissensch. 44, 189-196.

Huygens C. (1690) Traité de la Lumière où sont Expliquées les Causes de ce qui luy Arrive dans la Réflexion, & dans la Réfraction, et Particulièrement dans l´Étrange Réfraction du Cristal d´Islande. P. van der Aa, Leiden, 124 p. A translation by S.P. Thompson was published in vol. 34 of Great Books of the Western World, 1954.

Ievins A. and M. Straumanis (1940) Die Gitterkonstanten des Kalkspats, bestimmt nach der Drehkristallmethode. Zeitschr. Phys. 116, 194-206. See also 126, 49-64, 1949 and Phys. Rev. 92, 1155-1157, 1953. A determination of manganese content in Iceland spar by M. S. and A. Dravnieks is in Zeitschr. Anal. Chemie 120, 168-177, 1940.

Ignatowsky W.v. (1910) Ein neuer Nicol für Projektionszwecke. Zeitschr. Instrumentenk. 30, 217-218.

Ingersoll A.W. (1925) A method for the complete mutual resolution of inactive acids and bases. J. Am. Chem. Soc. 47, 1168-1173. More in 50, 2264-2267.

Ingersoll L.R. (1906) An improved method of measuring the infra-red dispersion of magnetic rotation; and the magnetic rotatory dispersion of water. Phys. Rev. 23, 489-497.

Ingersoll L.R. (1910) The dispersion of metals in the infra-red spectrum. Astrophys. J. 32, 265-290.

Ingersoll L.R. (1914) A means to measure the glaze of paper. Electrical World 63, 645-647. Comment by P.G. Nutting on p.1156.

Ingersoll L.R. (1917) Natural and magnetic rotatory dispersion in the infra-red spectrum. Phys. Rev. 9, 257-268.

Ingersoll L.R. (1920) Polarization of radiation by gratings. Astrophys. J. 51, 129-139.

Ingersoll L.R. (1921) The glarimeter. J. Opt. Soc. Am. 5, 213-217. See also U.S. patent no. 1,225,250 granted on this device in 1917.

Ingersoll L.R. and S.S. De Vinney (1925) Non-magnetic films of nickel. Phys. Rev. 26, 86-91.

Insley H. (1928) The petrographic microscope as an instrument for the glass technologist. J. Am. Ceramic Soc. 11, 812-828.

Irby J.R.McD. (1878) On the Crystallography of Calcite. Doctoral dissertation, Göttingen. Publ. by v. Marcus, Bonn, 72 p. Extract in Zeitschr. Kristallogr. 3, 612-626, 1879.

Irvine J.C. (1906) Resolution of lactic acid by morphine. J. Chem. Soc. Trans. 89, 935- 939.

Irvine J.C. (1909) Über die Verwendung alkylierter Zucker zur Bestimmung der Konstitution von Disacchariden und Glucosiden. Biochem. Zeitschr. 22, 357-370.

Irvine J.C. and R.E. Rose (1906) The constitution of salicin. Synthesis of pentamethyl salicin. J. Chem. Soc. Trans. 89, 814-822.

Irvine J.C. and E.S. Steele (1920) The constitution of polysaccharides. I. The relationship of inulin to fructose. J. Chem. Soc. Trans. 117, 1474-1489.

Irvine J.C. and E.L. Hirst (1922) The constitution of polysaccharides. V. The yield of glucose from cotton cellulose. J. Chem. Soc. Trans. 121, 1585-1591.

Irvine J.C. and J. Patterson (1922) 1:3:4:6 - Tetramethyl fructose. J. Chem. Soc. Trans. 121, 2696-2703.

Isakson D.W. (1922) Developments in telephotography. Trans. AIEE 41, 794-801.

Irvine J.C., A.W. Fyfe and T.P. Hogg (1915) Derivatives of a new form of glucose. J. Chem. Soc. Trans. 107, 524-541.

Ives H.E. (1917) A polarization flicker photometer and some data of theoretical bearing obtained with it. Phil. Mag. 33, 360-380.

Ives H.E. (1924) Photo-electric properties of thin films of alkali metals. Astrophys. J. 60, 209-230, continued by H.E.I. and A.L. Johnsrud on p. 231-242.

Jackson R.F. and C.L. Gillis (1920) The double-polarization method for estimation of sucrose and the evaluation of the Clerget divisor. Sci. Pap. Bur. Std. 16, 125-194.

Jackson R.F. and S.M. Goergen (1929) A crystalline difructose anhydride from hydrolyzed inulin. J. Res. Bur. Std. 3, 27-39. More by R.F.J. and others in vols. 5 and 6.

Jackson R.F., C.G. Silsbee and M.J. Proffitt (1926) The preparation of levulose. Sci. Pap. Bur. Std. 20, 587-617.

Jacobs W.A. and L.C. Craig (1936) The ergot alkaloids XI. Isomeric dihydrolysergic acids and the structure of lysergic acid. J. Biol. Chem. 115, 227-238.

Jaeger F.M. and H. Haga (1916) On the Röntgen-patterns of isomorphous crystals. Proc. Sect. Sci., Koninkl. Akad. van Wetensch. 18, 1357-1364.

Jäger E. and G. Krüss (1888) Zur volumetrischen Bestimmung der Kohlensäure in Karbonaten. Zeitschr. Anal. Chem. 27, 721-724.

Jamin J. (1845) Mémoire sur la polarisation métallique. Comptes Rendus Acad. Sci. Fr. 21, 430-434. Continued in 22, 477-480 and 23, 1103-1105, 1846.

Jamin J. (1847) Mémoire sur la réflexion métallique. Ann. Chim. 19, 296-342.

Jamin J. (1850a) Mémoire sur la réflexion à la surface des corps transparents. Ann. Chim. 29, 263-305. On solids; another paper on liquids is in 31, 165-187, 1851.

Jamin J. (1850b) Mémoire sur la double réfraction elliptique du quartz. Comptes Rendus Acad. Sci. Fr. 30, 99-101.

Jamin J. (1860) Note sur la théorie de la réflexion et de la réfraction. Ann. Chim. 59, 413-426.

Jamin J. (1868, 1869) Sur un réfracteur différentiel pour la lumière polarisée. Comptes Rendus Acad. Sci. Fr. 67, 814-816 and a note in 68, 221 on using a thin plate of Iceland spar in CS_2 as replacement for Nicol prisms.

Jannettaz E. (1873) Sur la propagation de la chaleur dans les corps cristallisés. Ann. Chim. 29, 5-82. Extract or introduction in C.R. 75, 1501-1504, 1872.

Javal J. (1905) Étude de la transparence du cuivre pour les rayons visibles et infra-rouges. Ann. Chim. 5, 137-144.

Javal L. E. and H.A. Schiötz (1881) Un ophthalmomètre pratique. Ann. Oculist. 86, 5-21.

Jeancard P. and C. Satie (1901) Les méthodes d’analyse des huiles essentielles. Rev. Phys. Chim. Appl. Ind. 5, 529-536.

Jeanjean F. (1856) Sur l’huile essentielle contenue dans l’alcool de garance. Comptes Rendus Acad. Sci. Fr. 42, 857-859. Continued in 43, 103-104.

Jellett J.H. (1858-61) A new analyzing prism. Proc. Royal Irish Acad. 7, 348-350, also in British Assoc. Report 30, pt. ii, 13, 1860.

Jellett J.H. (1861-64) On a new optical saccharimeter. Proc. Royal Irish Acad. 8, 279-281. See also 1, 167-169 and 475-476, 1873-74.

Jellett J.H. (1875) Researches in chemical optics. Trans. Royal Irish Acad. 25, 371-450. A German translation appeared in the book series “Ostwald’s Klassiker” in 1908.

Jellinek K. (1906) Über Zersetzungsgeschwindigkeit von Stickoxyd und Abhängigkeit derselben von der Temperatur. Zeitschr. Anorg. Chem. 49, 229-276.

Jenkins F.A. and H.E. White (1957) Fundamentals of Optics, 3rd ed. McGraw-Hill, New York, 637 p.

Jensen C. (1928) Die Himmelsstrahlung. Chapter 4 in Handbuch der Physik vol. 19 (ed. H. Konen), 70-152. J. Springer, Berlin.

Jeremejew P. v. (1900) Ueber Zeolithe und Calcit von Island. Zeitschr. Krystallogr. 32, 428-429, extract from a paper published by the Academy of St. Petersburg in 1898.

Jerrard H.G. (1948) Optical compensators for measurement of elliptical polarization. J. Opt. Soc. Am. 38, 35-59.

Jobin A. (1922) Le spectrophotomètre Yvon. Revue d'Optique 1, 499-507.

Jobin A. and G. Yvon (1923, 1924) Procédé et appareil pour les mesures de photométrie hétérochrome. French patent no. 554635, 4 p. Improvements in apparatus for photometric, polarimetric and spectrometric determinations. British patent no. 204693, 12 p.

Joffé A. (1923) Elektrizitätsdurchgang durch Kristalle. Ann. Phys. 72, 461-500.

Johannsen A. (1914) Manual of Petrographic Methods. McGraw-Hill, New York, 649 p., reprinted 1918 and 1968.

Johnsen A. (1913) Die Struktureigenschaften der Kristalle. Fortschr. Mineral. 3, 93-140. Johnsen A. (1915) Das Raumgitter des Kalkspates. Zeitschr. Kristallogr. 54, 148-162. See also his paper in Phys. Zeitschr. 15, 712-715, 1914.

Johnson H. (1898) Hydrolysis of starch by acids. J. Chem. Soc. Trans. 73, 490-502.

Johnson J. Harlan (1940) Iceland spar in Taos County, New Mexico. Am. Mineral. 25, 151-152. Also in Mines Magazine 30, 59-60.

Jones L.A. (1914) Color analysis of two component mixtures. Phys. Rev. 4, 454-466.

Jones H.O. (1905) The stereoisomerism of substituted ammonium compounds. J. Chem. Soc. Trans. 87, 1721-1735.

Jones W. (1908) On the identity of the nucleic acids of the thymus, spleen and pancreas. J. Biol. Chem. 5, 1-26.

Jong W.F. de and E. Stradner (1954-56) Zeittafel (list of important events in the history of mineralogy). Mineral. Petr. Mitt. 5, 362-379. See also Lima-de-Faria 1990.

Jónsson S.S. (1988) Helgustaðanáma. Steinn 1, 6-7, 20. A short description of the quarry including the 1920 tunnel.

Joubin P. (1889) Sur la dispersion rotatoire magnétique. Ann. Chim. 16, 78-144.

Juckenack A. and R. Pasternack (1904) Untersuchung und Beurteilung von Fruchtsäften. Zeitschr. Unters. Nahr.- Genussm. 8, 10-26. More on marmalade and jellies 26-36.

Jungfleisch E. (1873) Sur la synthèse des matières organiques douées du pouvoir rotatoire. Production des acides tartriques droit et gauche, en partant du gaz oléfiant. Comptes Rendus Acad. Sci. Fr. 76, 286-290. First synthesis of an optically active compound.

Jüptner H.v. (1908) Heat Energy and Fuels. McGraw Co., New York, 306 p.

Kaiser W. (1896) Die Technik des Modernen Mikroskopes. M. Perles, Vienna, 226 p.

Kaiserling C. and A. Orgler (1902) Ueber das Auftreten von Myelin in Zellen und seine Beziehung zur Fettmetamorphose. Virchow's Arch. Pathol. Anat. 167, 296-310.

Kalmus H.T. (1914) The preparation of metallic cobalt by reduction of the oxide. J. Ind. Eng. Chem. 6, 107-115.

Kapitza P. and H.W.B. Skinner (1925) The Zeeman effect in strong magnetic fields. Proc. Royal Soc. A109, 224-239.

Karny H. (1913) Optische Untersuchung zur Aufklärung der Struktur der Muschelschalen. Sitzungsber. Akad. Wiss. Wien 122(3), 207-259.

Karolus A. and O. Mittelstaedt (1928) Die Bestimmung der Lichtgeschwindigkeit unter Verwendung des elektrooptischen Kerr-Effektes. Phys. Zeitschr. 29, 698-702.

Karolus A. and J. Helmberger (1967) Lichtgeschwindigkeitsmessungen mit einem He-Ne-Gaslaser als Lichtquelle. Ann. Phys. 19, 390-416.

Karrer E. (1922) Use of the Ulbricht sphere in measuring reflection and transmission factors. Sci. Pap. Bur. Std. 17, 203-225 (no. 415).

Karrer P. and W. Kaase (1919) Beiträge zur Walden'schen Umkehrung. Helv. Chim. Acta 2, 436-454. More in 3, 244-251, 1920.

Karrer P., H.R. Salomon and J. Peyer (1923) Tannins II. Chinese tannins. Helv. Chim. Acta 6, 3-36.

Karrer P., K. Escher and R. Widmer (1926) Über die Konfiguration der d-Glutaminsäure, des d-Ornithins und d-Lysins. Helv. Chim. Acta 9, 301-323.

Kaspar J. (1940) O islandském vápenci. Prague, 43 p. Most copies of this publication got lost during WWII, but a 1960 report by J.K. contained much of the material therein.

Kastler A. (1930) L'effet Raman dans les liquides doués de pouvoir rotatoire. Comptes Rendus Acad. Sci. Fr. 191, 565-566.

Kastler A. (1931) Non existence d'un spin de photons. J. Phys. Radium 2, 159-164.

Kauffman G.B. (1968) Classics in Coordination Chemistry, Part 1. Dover Publ., New York, 190 p. Translations of six papers by A. Werner, with introduction.

Kauffman G.B. (1975) The discovery of optically active coordination compounds: a milestone in stereochemistry. Isis 66, 38-62.

Kayser H. and C. Runge (1888) Ueber die Spectren der Elemente. Anhang, Abh. Akad. Wiss. Berlin 1888, Abhandlung III, 93 pp. Several more of these appeared.

Keeler C.H. (1936) Improvements in or relating to ophthalmoscopes. U.K. patent no. 440,735, 5 p. U.S. patent no. 2,111,187 was granted in 1938.

Keesom W.H. (1911) Spektrophotometrische Untersuchung der Opaleszenz eines einkomponentigen Stoffes in der Nähe des kritischen Zustandes. Ann. Phys. 35, 591-598.

Kelland P. (1838) On the transmission of light in crystallized media. Trans. Cambr. Philos. Soc. 6, 323-352, with a Supplement p. 353-360.

Kelland P. (1844) On the plane and angle of polarisation of light reflected at the surface of a crystal. Trans. Royal Soc. Edinb. 15, 37-65.

Kelley V.C. (1940) Iceland spar in New Mexico. Am. Mineral. 25, 357-367.

Kellner O., V. Mori and M. Nagaoka (1890) Beiträge zur Kenntniss der invertirenden Fermente. Zeitschr. Physiol. Chemie 14, 297-317. On koji, an important item in Japanese food culture.

Kellström G. (1927) Präzisionsmessungen in der K-Serie der Elemente Palladium und Silber. Zeitschr. Phys. 41, 516-523.

Kelly A. (1901) Beiträge zur mineralogischen Kenntniss der Kalkausscheidungen im Thierreich. Jenaische Zeitschr. f. Naturwiss. 35, 429-494.

Kendall J. (1912) The solubility of calcium carbonate in water. Phil. Mag. 23, 958-976.

Kennedy R.J. (1922) Another ether-drift experiment. Phys. Rev. 20, 26-33.

Kennedy R.J. (1928) Contribution at a conference on the Michelson-Morley experiment, reported in Astrophys. J. 68, 367-373. See also papers by R.J.K. in Proc. Nat. Acad. Sci. 12, 621-629, 1926, by K.K. Illingworth in Phys. Rev. 30, 692-696, 1927, and by R.J.K. and E.M. Thorndike in Phys. Rev. 42, 400-418, 1932.

Kennedy R.P. (1927) A spectrophotometric study of blood solutions. Am. J. Physiol. 79, 346-361.

Kenngott A. (1892) Gleitflächen am Doppelspath. N. Jahrb. Mineral. 1892(1), 219-221.

Kenrick E.B. and F.B. Kenrick (1902) The application of polarimetry to the estimation of tartaric acid in commercial products. J.Am. Chem. Soc. 24, 928-944.

Kent C.V. (1919) The optical constants of liquid alloys. Phys. Rev. 14, 459-489.

Kenyon J. and D.P. Young (1941) Retention of asymmetry during the Curtius and the Beckmann change. J. Chem. Soc. 1941, 263-267.

Kerr J. (1875) A new relation between electricity and light: dielectrified media birefringent. Phil. Mag. 50, 337-348, 446-458. Discovery of the electro-optic effect.

Kerr J. (1877) On rotation of the plane of polarization by reflection from the pole of a magnet. Phil. Mag. 3, 321-343. Abstract in B.A. Report 46, 40-41. Magneto-optic effect.

Kerr J. (1878) On reflection of polarized light from the equatorial surface of a magnet. Phil. Mag. 5, 161-177.

Kerr J. (1879, 1882) Electro-optic observations on various liquids. Phil. Mag. 8, 85-102, 229-245 and 13, 153-169, 248-262.

Kerr J. (1880) Measurements and law in electro-optics. Phil. Mag. 9, 157-174.

Kerr J. (1888) Experiments on the birefringent action of strained glass. Phil. Mag. 26, 321-342.

Kerr J. (1894) Experiments on a fundamental question in electro-optics: reduction of relative retardations to absolute. Proc. Royal Soc. 55, 252-265.

Kessler H. (1926) Polarimetrie. In: Handbuch der Biologischen Arbeitsmethoden (ed. E. Abderhalden), Abt. II, Teil 2, Heft 4, 1345-1430. Urban & Schwarzenberg, Berlin.

Kester F.E. (1899) A method for the study of phosphorescent sulphides. Phys. Rev. 9, 164-175.

Ketteler E. (1872) Ueber den Einfluss der astronomischen Bewegungen auf die optischen Erscheinungen. Ann. Phys. 147, 404-429 and 478-479, more in 148, 435-448, 1873.

Ketteler E. (1873) Astronomische Undulationstheorie. P. Neusser, Bonn, 274 p.

Ketteler E. (1874) Das spezifische Gesetz der sogenannten anomalen Dispersion. Ann. Phys. Jubelband, 166-182.

Ketteler E. (1877) Beiträge zu einer endgültigen Feststellung der Schwingungsebene des polarisirten Lichtes. Ann. Phys. 1, 206-247, 556-591.

Ketteler E. (1881) Experimentaluntersuchung über den Zusammenhang zwischen Refraction und Absorption des Lichtes. Ann. Phys. 12, 481-519. See also 363-380.

Ketteler E. (1893) Notiz, betreffend die Möglichkeit einer zugleich den elastisch-optischen wie den electromagnetischen Principien entsprechenden Dispersionsformel. Ann. Phys. 49, 382-386. See also a paper on double refraction 509-530.

Ketteler E. (1895) Ableitung der Gleichungen der electromagnetischen Lichttheorie aus den Erfahrungsthatsachen der Krystalloptik. Ann. Phys. 55, 525-539, 1895. See also 540-555 and 56, 56-77.

Ketteler E. and C. Pulfrich (1882) Photometrische Untersuchungen. Ann. Phys. 15, 337-377.

Keussler V. v. (1927) Die Polarisation der Resonanzstrahlung des Quecksilberdampfes und ihre Beeinflussung durch Magnetfelder und Zusatzgase. Ann. Phys. 82, 793-835.

Kieser K. (1919) Die Messung des Glanzes photographischer Papiere. Zeitschr. Anal. Chem. 32 (Aufsatzteil), 357-359. See also a paper by H. Schulz in Zeitschr. Techn. Phys. 5, 135-140, 1924.

Kiessig H. (1931) Untersuchungen zur Totalreflexion von Röntgenstrahlen. Ann. Phys. 10, 715-768.

Kikuchi S. and S. Nishikawa (1928) The diffraction of cathode rays by calcite. Proc. Imper. Acad. Japan 4, 475-477 and Nature 122, 726. See also a paper by A.G. Emslie in Nature 123, 977-978, 1929.

Kile D. E. (2003) The Petrographic Microscope. Mineral. Record, Special Publ. 1, 96 p., with many color photos of vintage instruments.

Kiliani H. (1882) Beitrag zur Kenntniss des Saccharins. Ber. Deutsch. Chem. Gesellsch. 15, 701-702, more 2953-2960.

Kiliani H. (1886) Ueber Arabinose. Ber. Deutsch. Chem. Gesellsch. 19, 3029-3036.

Kiliani H. (1891) Ueber Digitonin und Digitogenin. Ber. Deutsch. Chem. Gesellsch. 24, 339-347. He wrote at least 40 papers on this group of compounds to 1920.

Kimball A.L. (1921) Optical determination of stress in transparent materials. J. Opt. Soc. Am. 5, 279-289. Utilizes device described in British patent no. 164823.

King A.S. (1913) The variation with temperature of the electric furnace spectrum of iron. Astrophys. J. 37, 239-281.

King C.R. (1946,1947) How a sudden demand for optical calcite was met. Engineering and Mining J. 147(4), 80-81. Finding and mining optical calcite crystals. 148(6), 94-96.

King H.C. (1955) The History of the Telescope. C. Griffin & Co., London, 456 p.

King L.V. (1913) On the scattering and absorption of light in gaseous media, with applications to the intensity of sky radiation. Phil. Trans. Royal Soc. A212, 375-433.

Kinloch D.R., R.F. Belt and R.C. Puttbach (1974) Hydrothermal growth of calcite in large autoclaves. J. Crystal Growth 24/25, 610-613.

Kipnis N. (1991) History of the Principle of Interference of Light. Birkhäuser, Basel, 271 p.

Kipping F.S. (1900) Isomeric partially racemic salts containing quinquevalent nitrogen. Parts I-VI. J. Chem. Soc. Trans. 77, 861-923.

Kipping F.S. (1907) The synthesis of benzylethyl-propylsilicol, its sulphonation, and the resolution of the dl-sulphonic derivative into its optically active components. J. Chem. Soc. Trans. 91, 209-240.

Kipping F.S. (1921) dl-derivatives of silicoethane. J. Chem. Soc. Trans. 119, 647-653.

Kipping F.S. (1937) Organic derivatives of silicon. Proc. Royal Soc. A159, 139-148.

Kirchhoff G. (1859a) Über den Zusammenhang zwischen Emission und Absorption von Licht und Wärme. Sitzungsber. Akad. Wiss. Berlin 1859, 783-787.

Kirchhoff G. (1859b) Ueber den Winkel der optischen Axen des Aragonits für die verschiedenen Fraunhofer´schen Linien. Ann. Phys. 108, 567-573.

Kirchhoff G. (1860) Ueber das Verhältniss zwischen dem Emissionsvermögen und dem Absorptionsvermögen der Körper für Wärme und Licht. Ann. Phys. 109, 275-301. See also his paper in Dingler's Polyt. J. 157, 29-36.

Kirchhoff G. (1876) Ueber die Reflexion und Brechung des Lichtes an der Grenze krystallinischer Mittel. Abh. Akad. Wiss. Berlin 1876 (Physik, Abth. 2), 57-84.

Kirk R.J. (1897) Double spar of Iceland. Consular Reports on Commerce, Manufactures, etc. 53 (no. 199), 510-511. Washington D.C.

Kistiakowsky G.B. (1930) Photochemical decomposition of nitrosyl chloride. J. Am. Chem. Soc. 52, 102-108.

Klebs E. (1864) Die Nerven der organischen Muskelfasern. Virchow's Arch. Pathol. Anat. 32, 168-198.

Klein C. (1886) Ueber die Ziele der Mineralogie, ihre Methoden und die Anwendung ihrer Resultate auf die Gesteinskunde. Festrede, Georg-Augusts-Universität, 32 p.

Klein C. (1887) Beleuchtung und Zurückweisung einiger gegen die Lehre von den optischen Anomalien erhobenen Einwendungen. N. Jahrb. Mineral. 1887(1), 223-246.

Klein C. (1895) Der Universaldrehapparat, ein Instrument zur Erleichterung und Vereinfachung krystallographisch-optischer Untersuchungen. Sitzungsber. Akad. Wiss. Berlin 1895(I), 91-107. More on thin sections in 1895(II), 1151-1159.

Klein C. (1900) Das Krystallpolymeter, ein Instrument für krystallographischoptische Untersuchungen. Sitzungsber. Akad. Wiss. Berlin 1900, 248-259. See also a paper on this instrument by C. Leiss in Zeitschr. Instrumentenk. 22, 201-209, 1902.

Klein C. (1902) Totalreflectometer mit Fernrohr-Mikroskop. Sitzungsber. Akad. Wiss. Berlin 1902, 653-655.

Kley P. (1904) Ein Beitrag zur Analyse der Alkaloide. Zeitschr. Anal. Chemie 43, 160-167.

Klobb T. and A. Bloch (1907) Sur le phytostérol du Soja. Bull. Soc. Chim. 1, 422-428.

Klocke F. (1879) Ueber die optische Struktur des Eises. N. Jahrb. Mineral. 1879, 272-285. More in 1881(I), 23-30.

Klocke F. (1880) Über Doppelbrechung regulärer Krystalle. N. Jahrb. Mineral. 1880(1), 53-88.

Klockmann F. (1903) Lehrbuch der Mineralogie, 3rd ed. F. Enke, Stuttgart, 588 + 41 p.

Klug F. (1895) Untersuchungen über Pepsinverdauung. Pflüger's Arch. Physiol. 60, 43-70. Continued in 65, 330-342, 1896.

Knoblauch H. (1848) Ueber die Doppelbrechung der strahlenden Wärme. Ann. Phys. 74, 1-9. Ueber die Polarisation der strahlenden Wärme durch Doppelbrechung, 177-190. More on the properties of heat radiation: 9-24, 161-170, 170-177.

Knoblauch H. (1851) Ueber das Verhalten krystallisirter Körper zwischen elektrischen Polen. Ann. Phys. 83, 289-299. Also N. Jahrb. Mineral. 1851, 698-705. See Tyndall and Knoblauch on magnetic properties of Iceland spar and other crystals.

Knoblauch H. (1852) Ueber die Abhängigkeit des Durchgangs der strahlenden Wärme durch Krystalle von ihrer Richtung in denselben. Ann. Phys. 85, 169-188. More in 93.

Knoblauch O. (1895) Ueber die Fluorescenz von Lösungen. Ann. Phys. 54, 193-220.

Knochenhauer K.W. (1839) Die Undulationstheorie des Lichtes. G. Reimer, Berlin, 206 p.

Knorr L., H. Hörlein and C. Grimme (1907) Über das Allopseudokodein, ein neues Isomeres des Kodeins. Ber. Deutsch. Chem. Gesellsch. 40, 3844-3851.

Kobell F. v. (1855) Optisch-krystallographische Beobachtungen und über ein neues Polariskop, Stauroskop. J. Prakt. Chem. 64, 387-399. More e.g. in 65, 321-341.

Kobell F. v. (1862) Ueber Asterismus und die Brewster´schen Lichtfiguren. Sitzungsber. Bayer. Akad. München 1862(I), 199-209. Also Phil. Mag. 24, 497-504.

Koch J. (1909) Dispersionsmessungen an Gasen im sichtbaren und im ultraroten Spektrum. Nova Acta Reg. Soc. Sci. Ups. Ser. IV, vol. 2 no. 5, 61 p.

Koch J. (1911) Über die Reflexion des Lichtes an Kalkspat in der Nähe von dessen metallischer Reflexionsbande bei ca. 6,6 μ. Arkiv Matem. Astr. Fys. 7 no. 9, 16 p.

Koelker A.H. (1910) The study of enzymes by means of the synthetical polypeptides. J. Biol. Chem. 8, 145-175.

Koenigs W. and E. Knorr (1901) Ueber einige Derivate des Traubenzuckers und der Galactose. Ber. Deutsch. Chem. Gesellsch. 34, 957-981.

Koeppe L. (1921) Die Ultra- und Polarisationsmikroskopische Erforschung des Lebenden Auges und ihre Ergebnisse. Bircher, Berne, 269 p. See also his papers in Graefe's Arch. Ophthalmol. 98, 1919 and 102, 1920.

Max Kohl A.G. (1909) Price List no. 50 vol. I-III. Equipments for Physics and Chemistry Class Rooms. Includes 44th Notice on Kohl's Megadiascope, p. 1201-1232. Chemnitz.

Köhler A. (1926) Die Verwendung des Polarisationsmikroskops für biologische Untersuchungen. In: Handbuch der Biologischen Arbeitsmethoden (ed. E. Abderhalden), Abt. II, Teil 2, Heft 2, 908-1108. Urban & Schwarzenberg, Berlin.

Köhler J. (1912) Chemische Untersuchung des Fichtenharzes (von Picea excelsa Lk.) III. J. Prakt. Chemie 85, 534-564.

Kohler R.E. (1973) The enzyme theory and the origin of biochemistry. Isis 64, 181-196.

Kohlrausch A. (1923) Über den Helligkeitsvergleich verschiedener Farben. Pflüger's Arch. Physiol. 200, 210-215.

Kohlrausch F. (1878) Ueber die Ermittelung von Lichtbrechungsverhältnissen durch Totalreflexion. Ann. Phys. 4, 1-33.

Kohlrausch K.W.F. (1920) Beiträge zur Farbenlehre. I. Farbton und Sättigung der Pigmentfarben. Phys. Zeitschr. 21, 396-403.

Kohlrausch W. (1878) Ueber die experimentelle Bestimmung von Lichtgeschwindig-keiten in Krystallen. Ann. Phys. 6, 86-115 and 7, 427- 435. Uses total reflection.

Kolácek F. (1888) Beiträge zur electromagnetischen Lichttheorie. Ann. Phys. 34, 673-711, continued in 39, 236-257, 1890.

König A. (1882) Das Leukoskop und einige mit demselben gemachte Beobachtungen. Ann. Phys.

17, 990-1008. Also in Zeitschr. Instrumentenk. 3, and a simplified version in Verh. Phys. Gesellsch. 1884(11), 41-43. Instrument including Nicol prisms, for investigating e.g. color perception. Originally described by D. Kitao in a doctoral thesis published in 1878; developed further by Brodhun 1888 and Priest 1920.

König A. (1886) The modern development of Thomas Young's theory of colour-vision. British Assoc. Report 56, 431-439. Also in Naturwiss. Rundschau 1.

König A. (1894) Ein neues Spectralphotometer. Ann. Phys. 53, 785-792.

König A. (1897) Die Abhängigkeit der Farben- und Helligkeitsgleichungen von der absoluten Intensität. Sitzungsber. Akad. Wiss. Berlin 1897, 871-882.

König A. and E. Brodhun (1888) Experimentelle Untersuchungen über die psychophysische Fundamentalformel in Bezug auf den Gesichtssinn. Sitzungsber. Akad. Wiss. Berlin 1888, 917-931, with a supplement in 1889, 641-644.

König A. and C. Dieterici (1893) Die Grundempfindungen in normalen und anomalen Farbensystemen und ihre Intensitätsverteilung im Spektrum. Zeitschr. Psychol. Physiol. Sinnesorg. 4, 241-347.

König J. and W. Karsch (1895) Das Verhältniss von Dextrose zu Lävulose im Süsswein und Honig und die Benutzung derselben zum Nachweis von Verfälschungen dieser Genussmittel. Zeitschr. Anal. Chemie 34, 1-18.

König W. (1887) Magnetische Untersuchungen an Krystallen. Ann. Phys. 31, 273-302.

König W. (1901) Doppelbrechung in transversal schwingenden Glasplatten. Ann. Phys. 4, 1-40.

König W. (1903) Doppelbrechung in Glasplatten bei statischer Biegung. Ann. Phys. 11, 842-866.

Königsberger J. (1897) Ueber die Absorption von ultrarothen Strahlen in doppeltbrechenden Krystallen. Ann. Phys. 61, 687-704.

Königsberger J. (1898) Magnetische Suszeptibilität von Flüssigkeiten und festen Körpern. Ann. Phys. 66, 698-734.

Königsberger J. (1901a) Zur optischen Bestimmung der Erze. Centralbl. Mineral. 1901, 195-197. One of the first papers on reflection microscopy on ore minerals.

Königsberger J. (1901b) Ueber ein Mikrophotometer zur Messung der Absorption des Lichts. Zeitschr. Instrumentenk. 21, 129-133. More on applications in 22, 88-89, 1902.

Königsberger J. (1901c) Ueber die Abhängigkeit der Absorption des Lichtes in festen Körpern von der Temperatur. Ann. Phys. 4, 796-810.

Königsberger J. (1903) Über ein Polarisationsphotometer und dessen Verwendung zur Messung im Ultraviolett und zur absoluten Bestimmung der Reflexion. Phys. Zeitschr. 4, 345-347.

Königsberger J. (1908) Ueber einen Apparat zur Erkennung und Messung optischer Anisotropie undurchsichtiger Substanzen und dessen Verwendung. Centralbl. Mineral. 1908, 565-573, 597-605.

Königsberger J. (1909) Methoden zur Erkennung und Messung optischer Anisotropie undurchsichtiger Substanzen. Centralb. Mineral. 1909, 245-250. More in 1910, 712-713.

Königsberger J. and K. Kilchling (1909) Über das Verhalten gebundener und "freier" Elektronen gegen elektromagnetische Strahlung. Ann. Phys. 28, 889-924.

Kopeloff N. and L. Kopeloff (1919) The deterioration of manufactured cane sugar by molds. J. Ind. Eng. Chem. 11, 845-850.

Koppeschaar W. (1885) Ueber die Zusammensetzung und Gehaltsbestimmung des käuflichen schwefelsauren Chinins. Zeitschr. Anal. Chemie 24, 362-376.

Kortüm G. (1930) Über die Bedeutung und Anwendung der Rotationsdispersion (R.D.) für chemische Fragen. Zeitschr. Angew. Chemie 43, 341-348.

Kossel A. and A. Neumann (1893) Ueber das Thymin, ein Spaltungsproduct der Nucleinsäure. Ber. Deutsch. Chem. Gesellsch. 26, 2753-2756.

Kossel A. and F. Weiss (1909) Über die Einwirkung von Alkalien auf Proteinstoffe. Zeitschr. Physiol. Chemie 59, 492-498 and 60, 311-316. More in 68, 165-169, 1910.

Kostov I. (1968) Mineralogy. Oliver and Boyd, Edinburgh, 587 p., translated from Russian. Includes a discussion on how temperature of formation may influence crystal habits in calcite. See also a paper by G. Kalb in Centralbl. Mineral. 1928, 337-339.

Kostov I. and R.I. Kostov (1999) Crystal Habits of Minerals. Drinov Publ., Sofia, 415 p. Pressure of carbon dioxide seems to have taken over from temperature as decisive factor.

Köttgen E. (1894) Untersuchung der spectralen Zusammensetzung verschiedener Lichtquellen. Ann. Phys. 53, 793-811.

Köttgen E. and G. Abelsdorff (1895) Die Arten des Sehpurpurs in der Wirbelthierreihe. Sitzungsber. Akad. Wiss. Berlin 1895, 921-926.

Kraemer E.O. and J.R. Fanselow (1925) Studies of the optical activity of gelatin systems. J. Phys. Chem. 29, 1169-1175.

Kramp C. (1811) Mémoire sur la double réfraction de la chaux carbonatée. Mém. Soc. Sci. Agric. Arts, Strasbourg 1, 181-280. Submitted for the Academy's prize competition on double refraction.

Kranz H.W. (1927) Die polarisationsmikroskopische Untersuchung der kataraktös getrübten Linse. Graefe's Arch. Ophthalmol. 118, 571-605.

Kraus F., -. Kossler and W. Scholz (1899) Über die Sauerstoffcapacität des menschlichen Blutes in Krankheiten. Arch. Exper. Pathol. Pharmakol. 42, 323-355.

Krauss E. (1922) Stéréo-Jumelles à Prismes. Jumelles Galiléiques. Longues-Vues. Paris, 40 p. catalog.

Kravkov S.W. (1927) Über die Helligkeits- und Adaptionskurven der total Farbenblinden. Graefe's Arch. Ophthalmol. 118, 285-291.

Krebs A. (1927) Über die Bestimmung des Brechungsexponenten aus Reflexions-messungen im ultraroten Spektrum. Ann. Phys. 82, 113-137.

Krecke F.W. (1872) Ueber die Beziehungen der Drehungsfähigkeiten organischer Körper. J. Prakt. Chem. 5, 6-23. Review condensed from Arch. Néerl. 6, 1871. Emphasizes the value of optical activity measurements for molecular structure work.

Kremers H.C. (1940) Synthetic optical crystals. Ind. Eng. Chem. 32, 1478-1483.

Kreutz S. (1908) Über die Ausbildung der Kristallform bei Calcitzwillingen. N. Jahrb. Mineral. 1908(1), 176-178. Extracted from Denkschr. Akad. Wiss. Wien 80, 15-81, 1906.

Kries J. v. and W. Nagel (1896) Über den Einfluss von Lichtstärke und Adaptation auf das Sehen des Dichromaten (Grünblinden). Zeitschr. Psychol. Physiol. Sinnesorg. 12, 1-38.

Krishnan R.S. (1935) On the depolarization of Tyndall scattering in colloids. Proc. Indian Acad. Sci. 1A, 717-722, more 782-788.

Kristjánsson L. (1996) Silfurberg – ein merkasta steind í sögu raunvísinda. In: Eðlisfræði á Íslandi VIII, ed. Helga Tulinius, 97-106. Eðlisfræðifélag Íslands, Reykjavík.

Kristjánsson L. (2000) Upphaf smásjárrannsókna á þunnsneiðum af bergi, og nokkur tengsl þess við Ísland. Jökull 48, 55-61. On the development of microscopical petrography, and some connections of its pioneers (Des Cloizeaux, Zirkel, Wright et al.) with Iceland.

Kristjánsson L. (2001a, 2007) Silfurberg og þáttur þess í þróun raunvísinda og ýmissar tækni, einkum á 19. öld: minnisblöð og heimildaskrá. Science Institute, University of Iceland, Report RH-07-2001, 126 + 36 p. Second edition: RH-19-2007, 384 p.

Kristjánsson L. (2001b) Silfurberg: einstæð saga kristallanna frá Helgustöðum. Jökull 50, 95-108. Paper in Icelandic on the quarry and its crystals. Another paper by L.K. on this topic in Icelandic appeared in the magazine Glettingur, 12(3), 35-39, 2002.

Kristjánsson L. (2002) Iceland spar - the Helgustadir calcite locality and its influence on the development of science. J. Geoscience Educ. 50, 419-427.

Kristjánsson L. (2003) A little known history of Helgustadir: type locality of Iceland spar. Matrix 11, 95-107.

Kristjánsson L. (2010) Iceland spar and its influence on the development of science and technology in the period 1780-1930. Science Institute Report RH-20-2010, 400 p.

Kron E. (1913) Über das Schwärzungsgesetz photographischer Platten. Publ. Astrophys. Observ. Potsdam 22(5), no. 67, 70 p. Extract in Ann. Phys. 41, 751-758.

Krug W.H. (1902) The analytical methods for carbohydrates as applied to foods and feeding stuffs. J. Franklin Inst. 154, 349-366, 401-422.

Krüger F. (1888) Beobachtungen über die Absorption des Lichtes durch das Oxyhämoglobin. Zeitschr. Biol. 24, 47-66.

Krüger F. (1899) Untersuchungen über die fermentative Wirkung des Dünndarmsaftes. Zeitschr. Biol. 37, 229-260.

Krüss H. (1892) Das Polarisations-Kolorimeter. Zeitschr. Physikal. Chemie 10, 165-182.

Krüss H. (1903) Die Durchlässigkeit einer Anzahl Jenaer optischer Gläser für ultraviolette Strahlen. Zeitschr. Instrumentenk. 23, 197-207, 229-239.

Krüss H. and P. Krüss (1909) Kolorimetrie und Quantitative Spektralanalyse, 2nd ed. L. Voss, Hamburg, 284 p.

Küch R. and T. Retschinsky (1906, 1907) Photometrische und spektralphotometrische Messungen am Quecksilberlichtbogen bei hohem Dampfdruck. Ann. Phys. 20, 563-583. Untersuchungen über selektive Absorption im Quecksilberlichtbogen. 22, 852-866.

Kuhn H. and R. Prinz (2003) Fra torfbaejum inn i taekniöld (From Turf Dwellings to an Age of Technology: illustrated accounts of travels in Iceland 1922 - 38), vol. 2, edited by M. Kristinsson. Örn og Örlygur, Reykjavik, 542 p.

Kuhn R. (1924) Physikalische Chemie und Kinetik der Fermentreaktionen. IV. Hauptteil, p. 92-384 of the 5th edition of Die Fermente und ihre Wirkungen, ed. C. Oppenheimer. G. Thieme, Leipzig.

Kuhn R. (1925) Der Wirkungsmechanismus der Amylasen: ein Beitrag zum Konfigurationsproblem der Stärke. Liebig's Ann. Chemie 443, 1-71.

Kuhn R. and P. Jacob (1924) Mutarotation. Zeitschr. Physikal. Chemie 113, 389-413.

Kuhn R. and E. Lederer (1931) Zerlegung des Carotins in seine Componenten. Ber. Deutsch. Chem. Gesellsch. 64, 1349-1357.

Kuhn W. and E. Braun (1929) Photochemische Erzeugung optisch aktiver Stoffe. Naturwissensch. 17, 227-228. More results by W.K. and E. Knopf in 18, 183, 1930.

Kuhn W. and E. Braun (1930) Messung und Deutung der Rotationsdispersion einfacher Stoffe. Zeitschr. Physikal. Chemie B8, 281-313. Messung des Zirkulardichroismus im Ultravioletten, 445-454.

Külz E. (1881) Über das Drehungsvermögen des Glycogens. Pflüger's Arch. Physiol. 24, 85-90.

Kundt A. (1864) Ueber die Doppelbrechung des Lichtes in tönenden Stäben. Ann. Phys. 123, 541-558. First extension of J.B. Biot's 1819 glass-rod experiment.

Kundt A. (1881) Ueber die Doppelbrechung des Lichtes in bewegten reibenden Flüssigkeiten. Ann. Phys. 13, 110-133. Also studied by G. Metz and others.

Kundt A. (1884) Die elektromagnetische Drehung der Polarisationsebene des Lichtes durch Eisen, Cobalt und Nickel. Sitzungsber. Akad. Wiss. Berlin 1884, 761-782, continued in 1885, 1055-1064. Comments by G.F. FitzGerald in Ann. Phys. 25.

Kundt A. and W.C. Röntgen (1879a) Nachweis der electromagnetischen Drehung der Polarisationsebene des Lichtes im Schwefelkohlenstoffdampf. Ann. Phys. 6, 332-336.

Kundt A. and W.C. Röntgen (1879b) Ueber die elektromagnetische Drehung der Polarisationsebene des Lichtes in den Gasen. Ann. Phys. 8, 278-298. Continued in 10, 257-265, 1880.

Kunz J. (1909) On the photoelectric properties of sodium-potassium alloy. Phys. Rev. 29, 174-176.

Kunz J. (1917) The law of photo-electric photometry. Astrophys. J. 45, 69-88.

Küpfmüller K. (1936) Telegraphie, Chapter III in Wien-Harms Handbuch der Experimentalphysik, Band 11, 3. Teil, especially p. 472-474.

Kuriyama S. (1916) The utilization of sucrose and the inverting power of the blood serum after parenteral administration of sucrose. J. Biol. Chem. 25, 521-547.

Kylin H. (1915) Untersuchungen über die Biochemie der Meeresalgen. Zeitschr. Physiol. Chemie 94, 337-425. See also his papers in 83, 171-197, 1913 and 101, 236-247, 1918.

Labonne H. (1887) Sur le gisement du spath d´Islande. Comptes Rendus Acad. Sci. Fr. 105, 1144-1145.

Lacroix A. (1893) Le domaine de la minéralogie. Rev. Sci. 51, 769-773.

Ladd W. (1874) On the construction of large Nicol´s prisms. Nature 10, 451.

Ladenburg A. (1886) Synthese der activen Coniine. Ber. Deutsch. Chem. Gesellsch. 19, 2578-2583, corrected in 39, 2486-2491, 1906. See also his: Synthèse de la conicine. Comptes Rendus Acad. Sci. Fr. 103, 876-880. First laboratory synthesis of an alkaloid. Much more in Liebig´s Ann. Chemie 247, 1-98, 1888.

Ladenburg A. (1906) Über das Isoconiin und die Synthese des Coniins. Ber. Deutsch. Chem. Gesellsch. 39, 2486-2491. More in 40, 3734-3736, 1907.

Ladenburg R. (1912) Über die anomale Dispersion und die magnetische Drehung der Polarisationsebene des leuchtenden Wasserstoffs, sowie über die Verbreiterung von Spektrallinien. Ann. Phys. 38, 249-318.

Ladenburg R. (1926) Die quantentheoretische Dispersionsformel und seine experimentelle Prüfung. Naturwissensch. 14, 1208-1213.

Ladenburg R. and F. Reiche (1923) Absorption, Zerstreuung und Dispersion in der Bohrschen Atomtheorie. Naturwissensch. 11, 584-598.

Lagarde H. (1885) Recherches photométriques sur le spectre de l’hydrogène. Ann. Chim. 4, 248-370. Uses spectrophotometer with Nicol prisms.

la Hire P. de (1710) Observations sur une espèce de talc qu’on trouve communément proche de Paris au-dessus des bancs de pierre de plâtre. Mém. de l´anc. Acad. Sci. 1710, 341-352, published 1732. Referred to by Verdet 1869 and Buchwald 1989.

Lallemand A. (1869) Recherches sur l’illumination des liquides par un faisceau de lumière neutre ou polarisée. Comptes Rendus Acad. Sci. Fr. 69, 189-193. More 282-284, 917-920 (on solids) and 1294-1296.

Lallemand A. (1871) Recherches sur l’illumination des corps transparents. Ann. Chim. 22, 200-234. Continuation in 8, 93-136, 1876.

Lambert P., G. Déjardin and D. Chalonge (1927) Sur l’extrémité ultraviolette du spectre solaire et la couche d’ozone de la haute atmosphère. Comptes Rendus Acad. Sci. Fr. 185, 800-801, improving work by J. Cabannes and J. Dufay in 181, 302-304, 1925.

Lamé G. (1834) Mémoire sur les vibrations lumineuses des milieux diaphanes. Ann. Chim. 57, 211-219.

Lamé G. (1861) Leçons sur la Théorie Analytique de la Chaleur. Mallet-Bachelier, Paris, 414 p.

Lampen A. (1906) An electrical resistance furnace for the measurement of higher temperatures with the optical pyrometer. J. Am. Chem. Soc. 28, 846-853, more 853-858.

Land E.H. (1941) Light polarizer and process for manufacturing the same. U.S. patent no. 2,237,567, 4 p.

Land E.H. (1947) Optical interference sight for guns, cameras, or the like. U.S. patent No. 2,420,252. Reproduced in part in “Applications of Polarized Light”, 437-442.

Land E.H. (1950) Variable polarizing color filter. U.S. patent No. 2,493,200, applied for by Land in 1946. Reproduced in part in “Applications of Polarized Light”, ed. B.H. Billings, 183-195. SPIE Optical Engineering Press, Bellingham, 1992.

Land E.H. (1951) Some aspects of the development of sheet polarizers. J. Opt. Soc. Am. 41, 957-963. See also Land’s biography by McElheny 1998.

Land E.H. and J.S. Friedman (1933) Polarizing refracting bodies. U.S. patent no. 1,918,848, 5 p.

Landé A. (1921) Anomaler Zeemaneffekt und Seriensysteme bei Ne und Hg. Phys. Zeitschr. 22, 417-422.

Landerer J.J. (1889) Sur l’angle de polarisation de la Lune. Comptes Rendus Acad. Sci. Fr. 109, 360-362. Comparison measurements on igneous rocks are in 111, 210-212, 1890 and observations on Venus are reported in 114, 1524-1525, 1892.

Landolt H. (1873) Ueber Gesetzmässigkeiten bezüglich des molekularen Drehungs-vermögens der Weinsäure und ihrer Salze. Ber. Deutsch. Chem. Gesellsch. 6, 1073-1078. An early example of the use of a commercially made Wild´s polarimeter.

Landolt H. (1876) Zur Kenntniss des specifischen Drehungsvermögens gelöster Substanzen. Ber. Deutsch. Chem. Gesellsch. 9, 901-914.

Landolt H. (1883) Neuerungen an Polaristrobometern. Zeitschr. Instrumentenk. 3, 121-127.

Landolt H. (1898) Das Optische Drehungsvermögen Organischer Substanzen und dessen Praktische Anwendungen, 2nd ed. F. Vieweg und Sohn, Braunschweig, 655 p. Major work on optical activity, also published in English.

Landsberg G. and L. Mandelstam (1928) Eine neue Erscheinung bei der Lichtzerstreuung in Krystallen. Naturwissensch. 16, 557-8, also in C.R. 187, 109-111 and more fully in Zeitschr. Phys. 50, 769-780. Discovery of the Raman effect in crystals.

Landsteiner K. and J. v. d. Scheer (1928) Serological differentiation of steric isomers. J. Experim. Medicine 48, 315-320. Continued in 50, 407-417, 1929.

Lang V. v. (1858) Über die Minimum-Ablenkung der Lichtstrahlen durch doppeltbrechende Prismen. Sitzungsber. Akad. Wiss. Wien 33, 155-162.

Lang V. v. (1861) Über die Gesetze der Doppelbrechung. Sitzungsber. Akad. Wiss. Wien 43(2), 627-663. More in Ann. Phys. 159, 168-173, 1876.

Lang V. v. (1863) Zur Theorie der Cirkularpolarisation. Ann. Phys. 119, 74-86. More in Ergänzungsband 8, 608-624, 1878.

Lang V. v. (1867) Verbesserter Axenwinkel-Apparat. Sitzungsber. Akad. Wiss. Wien 55(2), 545-550. Spectroscope attachment is in Zeitschr. Kristallogr. 2, 492-494, 1878.

Lang V. v. (1868) Über unsere Kenntnisse von der optischen Eigenschaften der Krystalle. Almanach Akad. Wiss. Wien 18, 223-238. Lecture.

Lang V. v. (1869) Ueber den Zusammenhang zwischen der Circularpolarisation mit der hemiedrischen Hemisymmetrie. Ann. Phys. 137, 447-450.

Lang V.v. (1870) Ueber die Lichtgeschwindigkeit im Quarze. Sitzungsber. Akad. Wiss. Wien 60(2), 767-794, also Ann. Phys. 140, 460-478. See Liebisch 1891, p. 510-511.

Lang V.v. (1871) Nörrenberg’s Polarisations-Microscop. Carl’s Repertorium 7, 377-379.

Lang V. v. (1881) Optische Notizen I-IV, incl. Verbesserte dichroskopische Lupe. Sitzungsber. Akad. Wiss. 82(2), 171-179. Further improvements: G. Halle in N. Jahrb. Mineral. 1895(2), 247-248 and A. Cathrein in Zeitschr. Instrumentenk. 16, 1896.

Lange B. (1928) Über den Polarisationszustand des Tyndalllichtes von Kolloiden. Zeitschr. Physikal. Chemie 132, 1-26. More 27-46.

Langevin P. (1910) Sur les biréfringences électrique et magnétique. Le Radium 7, 249-260.

Laplace P.S. de (1808a) Rapport sur une mémoire de M. Malus, Sur divers phénomènes de la double réfraction de la lumière. Procés-Verbaux des Séances de l´Académie des Sciences 4, 145-

147 (with Hauy, Chaptal and Berthollet) and J. Mines 24, 219-226. Translated in Ann. Phys. 31, 274-285, 1809.

Laplace P.S. de (1808b) Sur la double réfraction de la lumière dans les milieux diaphanes. J. Mines 24, 401-414 and Bull. Soc. Philom. 1, 303-310. Transl. in Ann. Phys. 32, 446-462, 1809.

Laplace P.S. de (1809a) Sur la loi de la réfraction extraordinaire de la lumière dans les cristaux diaphanes. J. Phys. 68, 107-111.

Laplace P.S. de (1809b) Sur les mouvements de la lumière dans les milieux diaphanes. Mém. de l'Institut 10, 300-342, and Mém. Soc. Arcueil 2, 111-142, 1809. See comments by Young 1809, 1810.

Larmor J. (1894) A dynamical theory of the electric and luminiferous medium. Phil. Trans. Royal Soc. A185, 719-822, continued in A186, 695-743, 1895. See also his paper The action of magnetism on light…., in British Assoc. Report 63, 335-372, 1893.

Larmor J. (1900) Aether and Matter. Cambridge University Press, Cambridge, 365 p.

Larmor J. (1904) On the ascertained absence of motion through the aether, in relation to the constitution of matter; and on the FitzGerald-Lorentz hypothesis. Phil. Mag. 7, 621-625.

Larsen E.S. (1921) The Microscopic Determination of the Nonopaque Minerals. Bull. U.S. Geol. Survey No. 679. Government Printing Office, Washington D.C., 288 p.

Larsen E.S. and R.C. Wells (1916) Some minerals from the fluorite-barite vein near Wagon Wheel Gap, Colorado. Proc. Nat. Acad. Sci. 2, 360-365.

Lasareff P. (1907) Über das Ausbleichen von Farbstoffen im sichtbaren Spektrum. Ann. Phys. 24, 661-671.

Lasaulx A. v. (1878) Über die Verwendung des Mikroskopes als Polarisationsinstrument im convergenten Lichte und ein neues Mikroskop zu mineralogische Zwecken. N. Jahrb. Mineral. 1878, 377-380.

Lasaulx A.v. (1886) Einführung in die Gesteinslehre. E. Trewendt, Breslau, 215 p.

Laspeyres H. (1882) Ueber Stauroskope und stauroskopische Methoden. Zeitschr. Instrumentenk. 2, 14-24 and 54-60, more in Zeitschr. Kristallogr. 8, 97-124, 1883-84.

Laszlo H.G. de (1928) Absorption coefficients. J. Phys. Chem. 32, 503-506.

Lauber H. and V. Adamük (1909) Über das Vorkommen von doppelbrechendem Lipoid in der Netzhaut bei Retinitis albumurica nebst Bemerkungen über die pathologische Anatomie dieser Erkrankung. Graefe's Arch. Ophthalmol. 71, 429-465.

Lauch K. (1924) Die optischen Konstanten chemisch reiner, undurchsichtiger durch Kathodenzerstäubung hergestellter Metallschichten. Ann. Phys. 74, 55-79.

Laue M. and F.F. Martens (1907) Bestimmung der optischen Konstanten von glühenden Metallen aus der Polarisation der seitlich emittierten Strahlung. Phys. Zeitschr. 8, 853-856.

Lauffer M.A. and W.M. Stanley (1938) Stream double refraction of virus proteins. J. Biol. Chem. 123, 507-523. Stanley was awarded the Nobel prize in Chemistry in 1946.

Laurent A. (1849) Sur les borates et sur le poids atomique du chlore. Comptes Rendus Acad. Sci. Fr. 29, 5-8.

Laurent L. (1874) Sur un nouveau saccharimètre et sur un moyen pour rendre la flamme de la soude absolument monochromatique. Comptes Rendus Acad. Sci. Fr. 78, 349-351. See also also J. Phys. 3, 183-186 and Les Mondes 33, 277-279.

[Laurent L.] (1876) Rapport fait par MM. Cloez et de Luynes...sur le nouveau saccharimètre de M. Laurent. Bull. Soc. Encouragem. 3, 671-682.

Laurent L. (1877) Sur les appareils de projections, à la lumière polarisée. Comptes Rendus Acad. Sci. Fr. 85, 1163.

Laurent L. (1879) Sur le saccharimètre Laurent. Comptes Rendus Acad. Sci. Fr. 89, 665-666. See also a description of this instrument in La Nature 6(I), 219-222, 1878.

Laurent L. (1882) Polarimètre à lumière ordinaire. Comptes Rendus Acad. Sci. Fr. 94, 442-443. Also in Bull. Séances Soc. Fr. Phys. 1882, 146-150.

Lausen C. (1928) Hydrous sulphates formed under fumerolic conditions at the United Verde mine. Am. Mineral. 13, 203-229.

Lavizzari L. (1865) Nouveaux phénomènes des corps cristallisés. Lugano, 54 p.

Lawrence A.S.C., J. Needham and S.C. Shen (1944) Studies on the anomalous viscosity and flow-birefringence of protein solutions. I. General behavious of proteins subjected to shear. J. Gen. Physiol. 27, 201-232. More 233-271.

Lawrence E.O. and J.W. Beams (1927) On the nature of light. Proc. Nat. Acad. Sci. 13, 207-212. Additional results on p. 505-510 and in Phys. Rev. 32, 478-485, 1928.

Lawrence E.O. and F.G. Dunnington (1930) On the early stages of electric sparks. Phys. Rev. 35, 396-407. See also papers by F.G.D. in 38, 1506-1534 and 1535-1546, 1931.

Leathem J.G. (1897) On the theory of the magneto-optic phenomena of iron, nickel and cobalt. Phil. Trans. Royal Soc. A190, 89-127.

Leavitt H.S. (1914) The North Polar Sequence. Ann. Harvard Coll. Astron. Observ. 71 (no. 3), 47-232. See also Harvard Coll. Observ. Circular no. 170 and MNRAS 73, 1912.

Lebedeff A.-A. (1930) Interféromètre à polarisation et ses applications. Revue d'Optique 9, 385-413.

Lebedew P. (1895) Ueber die Doppelbrechung der Strahlen electrischer Kraft. Ann. Phys. 56, 1-17.

Le Bel J.A. (1873) Procédé pour préparer l'alcool amylique actif. Comptes Rendus Acad. Sci. Fr. 77, 1021-1024. See also his paper in Bull. Soc. Chim. 21, 542-545, 1874.

Le Bel J.A. (1874) Sur les relations qui existent entre les formules atomiques des corps organiques et le pouvoir rotatoire de leurs dissolutions. Bull. Soc. Chim. 22, 337-347. On the three-dimensional valences of carbon, suggested independently by J.H. van t'Hoff.

Le Bel J.A. (1878) Recherches sur l´alcool amylique (suite): alcool dextrogyre. Comptes Rendus Acad. Sci. Fr. 87, 213-215. See also his previous paper in Bull. Soc. Chim. 25, 545-547, 1876.

Le Bel J.A. (1891) Les relations du pouvoir rotatoire avec la structure moléculaire. Rev. Sci. 48, 609-617. See also his paper in Comptes Rendus Acad. Sci. Fr. 112, 724-726.

Le Bel J.A. (1904) Sur la stéréochimie de l'azote. Comptes Rendus Acad. Sci. Fr. 129, 548-550.

Le Chatelier H. (1882) Recherches expérimentales sur la constitution des ciments et la théorie de leur prise. Comptes Rendus Acad. Sci. Fr. 94, 867-869.

Le Chatelier H. (1889) Sur la dilatation du quartz. Comptes Rendus Acad. Sci. Fr. 108, 1046-1049. Sur la polarisation rotatoire du quartz. 109, 264-266. Also in Bull. Soc. Fr. Minéral. 13, 1890, with graphs. More heating experiments in 110, 399-402, 1890.

Le Chatelier H. (1893) Sur la chaleur de formation de l'arragonite. Comptes Rendus Acad. Sci. Fr. 116, 390-392. Revised by Bäckström 1925.

Lecher E. (1882) Ueber Ausstrahlung und Absorption. Ann. Phys. 17, 477-518.

Lecher E. (1917) Lehrbuch der Physik für Mediziner, Biologen und Psychologen, 2nd ed. B.G. Teubner, Leipzig/Berlin, 449 p.

Ledderhose G. (1876) Ueber salzsäures Glycosamin. Ber. Deutsch. Chem. Gesellsch. 9, 1200-1201. More in Zeitschr. Physiol. Chemie 2, 213-227, 1878-79 and 4, 139-159, 1880.

Leder F. (1907) Über die absolute Intensitätsverteilung im kontinuerlichen Grund der Alkalimetallspektren, über die Strahlung der Hefnerlampe und des Osmiums. Ann. Phys. 24, 305-325.

Lees C.H. (1893) On the thermal conductivities of crystals and other bad conductors. Phil. Trans. Royal Soc. 183, 481-509.

Leeson H.B. (1843-45) Observations on the circular polarization of light by transmission through fluids. Mem. and Proc. Chem. Soc. 2, 26-45.

Leeson H.B. (1845) On crystallography, with a description of a new goniometer and crystallonome. Mem. and Proc. Chem. Soc. 3, 486-560.

Legg M.S. (1849) On the application of polarized light in microscopic investigations. Trans. Microsc. Soc. London 2, 83-88 and 122, read 1846-47.

Lehmann O. (1886a) Contractionsrisse an Kristallen. Zeitschr. Kristallogr. 11, 608-612.

Lehmann O. (1886b) Ueber Mikroskope für physikalische und chemische Untersuchungen. Zeitschr. Instrumentenk. 6, 325-334.

Lehmann O. (1889) Über fliessende Krystalle. Zeitschr. Physik. Chemie 4, 462-472.

Lehmann O. (1890) Einige Verbesserungen des Krystallisationsmikroskops. Zeitschr. Instrumentenk. 10, 202-207.

Lehmann O. (1900) Structur, System und magnetisches Verhalten flüssiger Krystalle und deren Mischbarkeit mit festen. Ann. Phys. 2, 649-705.

Lehmann O. (1908) Zur Geschichte der flüssigen Kristalle. Ann. Phys. 25, 852-860.

Lehmann O. (1910) Das Kristallisationsmikroskop. F. Vieweg & Sohn, Braunschweig, 112 p.

Lehmann O. (1911-13) Neue Untersuchungen über flüssige Kristalle I-III. Sitzungsber. Heidelb. Akad. Wiss. 1911 no. 22, 1912 no. 13 and 1913 no. 13, 42 + 27 + 29 p.

Lehmann P. and H. Stadlinger (1907) Polarimetrische Bestimmung der Zuckerarten im Honig. Zeitschr. Unters. Nahr.- Genussm. 13, 397-419.

Leiss C. (1897a) Neues Lupenstativ mit Polarisation für mineralogische, geologische und paläontologische Zwecke. N. Jahrb. Mineral. 1897(1), 81-82.

Leiss C. (1897b, 1898a) Mittheilungen aus der R. Fuess´schen Werkstätte. N. Jahrb. Mineral. 1897(2), 86-96. More in 1898(2), 64-74.

Leiss C. (1897c) Über ein neues, aus Kalkspath und Glas zusammengesetztes Nicol´sches Prisma. Sitzungsber. Akad. Wiss. Berlin 1897, 901-904.

Leiss C. (1897-98) Die neuere Projektionsapparate von R. Fuess. N. Jahrb. Mineral. Beilageb. 11, 46-64.

Leiss C. (1898b) Neues Mikroskopmodell Ia für mineralogische und petrographische Studien. Zeitschr. Kristallogr. 44, 264-267.

Leiss C. (1899a) Ueber neue Totalreflexions-Apparate. Zeitschr. Kristallogr. 30, 357-372.

Leiss C. (1899b) Die Optischen Instrumente der Firma R. Fuess. Engelmann, Leipzig, 397 p. Reprinted in the U.S. in 1988.

Leiss C. (1903) Ueber ein neues Projectionsmikroskop für den mineralogisch-petrographischen Unterricht. Zeitschr. Kristallogr. 37, 270-272.

Leiss C. (1905) Präzisions-Polarisations-Spektrometer. Zeitschr. Instrumentenk. 25, 340-342.

Leiss C. (1908) Neues Mikroskopmodell Ia für mineralogische und petrographische Studien. Zeitschr. Kristallogr. 44, 264-267.

Leiss C. (1910) Mikroskop mit gemeinsamer Nicoldrehung in vereinfachter Form. Zeitschr. Kristallogr. 47, 377-378. Two other microscopes are described in 49, 193-198, 1911.

Leiss C. (1912) Neues petrographisches Mikroskop für die Theodolit-Methode. Centralbl. Mineral. 1912, 733-736.

Leiss C. (1925) Die modernen optischen Messinstrumente des Kristallographen und Petrographen. Reprint from Fortschr. Mineral. Kristallogr. Petrogr. 10, 5-88. G. Fischer, Jena, 91 p.

E. Leitz (1915) Anastigmatische Polarisationseinrichtung. German patent no. 296000, 2 p. See also S. Becher's patent no. 286804.

Lellmann E. and H. Gross (1890) Über die Affinitätsgrössen der Basen. Liebig's Ann. Chemie 260, 269-289. Continued in 263, 286-299, 1891 and on acids in 270.

Lely D. and L. Hamburger (1914) Herstellung der Elemente Thorium, Uran, Zirkon und Titan. Zeitschr. Anorg. Chemie 87, 209-228.

Lemberg J. (1887) Zur mikrochemischen Untersuchung von Calcit, Dolomit und Predazzit. Zeitschr. Deutsch. Geol. Gesellsch. 39, 489-492. More in 40, 357-359, 1888.

Lemon H.B. (1914) A polarization spectrophotometer using the Brace prism. Astrophys. J. 39, 204-212. Further development of the instrument described by Wallace 1907.

Lenz W. (1888) Was leisten die neueren Chinaprüfungen? Zeitschr. Anal. Chemie 27, 549-631.

Lepinay J. Macé de (1880) Recherches expérimentales sur la double réfraction accidentelle. Ann. Chim. 19, 5-90. On photoelasticity.

Lépine G. (1915) Étude expérimentale sur la fluorescence des solutions. Ann. de Phys. 4, 207-228.

Lépine R. (1911) Sur le sucre du sang. Rev. Sci. 49, 641-644.

Lerebours N.-P. (c. 1842) Description des Microscopes Achromatiques Simplifiés, 2nd ed. N.-P. Lerebours, Paris, 70 p. plus advertisements for his optical products p.71 - 84.

Lerebours N.-P. (1846, 1850) Instruction Pratique sur les Microscopes, 3rd ed. Lerebours & Secretan, Paris, 100 p. with a subsequent Supplément, 35 p.

Lerebours N.P. and M. Secretan (1853) Catalogue et prix des instruments d'optique, de physique, de chimie, de mathématiques, d'astronomie et de marine. Paris, 244 p.

Lespiau -. (1848) Dosage du sucre dans l'urine des diabétiques par le saccharimètre de M. Soleil. Comptes Rendus Acad. Sci. Fr. 26, 305-306.

Leuchs H. (1908) Zur Kenntnis der Strychnos-Alkaloide I. Oxydation des Brucins und Strychnins nach einer neuen Methode. Ber. Deutsch. Chem. Gesellsch. 41, 1711-1720.

Leuchs H. and J.F. Brewster (1913) Die Synthese des natürlichen, aus Eiweissstoffen gewonnene Oxy-proline. Ber. Deutsch. Chem. Gesellsch. 46, 986-1000.

Levene P.A. (1916) Sphingomyelin III. J. Biol. Chem. 24, 69-89.

Levene P.A. (1917) Chondrosamine and its synthesis. J. Biol. Chem. 31, 609-621.

Levene P.A. (1920) Properties of the nucleotides obtained from yeast nucleic acid. J. Biol. Chem. 41, 483-493.

Levene P.A. (1921) On the numerical values of the optical rotations in the sugar acids. J. Biol. Chem. 48, 197-202.

Levene P.A. (1922) Hexosamines, their Derivatives, and Mucins and Mucoids. Rockefeller Institute, New York, 104 p. An expanded edition appeared in 1925.

Levene P.A. (1925) The configurational relationships of the sugars, amino acids and halogen acids. Chem. Revs. 2, 179-216.

Levene P.A. and D.D. van Slyke (1909) The leucin fraction of proteins. J. Biol. Chem. 6, 391-418, with continuation on casein and edestin 419-430.

Levene P.A. and W.A. Jacobs (1909, 1910) Über die Pentose in den Nucleinsäuren. Ber. Deutsch. Chem. Gesellsch. 42, 3247-3251. Über die Pankreas-Pentose 43, 3147-3150.

Levene P.A. and F. Medigreceanu (1911) On nucleases. J. Biol. Chem. 9, 65-83, with continuation 375-387, 389-402.

Levene P.A. and D.D. van Slyke (1913) The separation of d-alanine and d-valine. J. Biol. Chem. 16, 103-120.

Levene P.A. and F.B. LaForge (1914) On chondroitin sulphuric acid. J. Biol. Chem. 18, 123-130.

Levene P.A. and E.S. London (1929) The structure of thymonucleic acid. J. Biol. Chem. 83, 793-802. More on this important subject by P.A.L. and T. Mori 803-816.

Levene P.A., L.A. Mikeska and T. Mori (1930) On the carbohydrate of thymonucleic acid. J. Biol. Chem. 85, 785-787.

Lewkowitsch J. (1883) Optisch aktive Glycerinsäure und optisch aktive Milchsäure. Ber. Deutsch. Chem. Gesellsch. 16, 2720-2721, more 2721-2723.

Lewschin W.L. (1925) Über polarisiertes Fluorescenzlicht von Farbstofflösungen. IV. Zeitschr. Phys. 32, 307-326.

E. Leybold's Nachfolger (c. 1900) Catalogue des Appareils pour l'Enseignement de la Physique. Berlin, 951 p.

Liebenthal E. (1907) Praktische Photometrie. F. Vieweg und Sohn, Braunschweig, 445 p.

Liebisch T. (1885) Neuere Apparate zum Messen des Winkels der optischen Axen. N. Jahrb. Mineral. 1885(1), 175-183. Ueber die Totalreflexion an optisch einaxigen Krystallen, 245-253, more in (2), 181-211.

Liebisch T. (1886) Ueber die Bestimmung der Lichtbrechungsverhältnisse doppeltbrechender Krystalle durch Prismenbeobachtungen. N. Jahrb. Mineral. 1886(1), 14-34, more in 1886(2), 47-66.

Liebisch T. (1887) Ueber eine besondere Art von homogenen Deformationen krystallinischer Körper. Nachr. Gesellsch. Wiss. Göttingen 1887, 435-448, with additions in N. Jahrb. Mineral. Beilageb. 6, 105-120, 1889. Mostly on calcite.

Liebisch T. (1891) Physikalische Kristallographie. Veit & Comp., Leipzig, 614 p.

Liebisch T. and H. Rubens (1919) Über die optischen Eigenschaften einiger Kristalle im langwelligen ultrarotem Spektrum. Sitzungsber. Akad. Wiss. Berlin 1919, 198-219.

Lima-de-Faria J., ed. (1990) Historical Atlas of Crystallography. Kluwer, Dordrecht, 158 p. Chapters by various authors.

Lincio G. (1907) Das neue Leitz'sche mineralogische Mikroskopmodell A. N. Jahrb. Mineral. Beilageb. 23, 163-186.

Linck G. (1883) Künstliche vielfache Zwillingsstreifung am Calcit. N. Jahrb. Mineral. 1883(1), 203-204.

Linck G. (1923) Grundriss der Kristallographie, 5th ed. G. Fischer Verlag, Jena, 292 p.

Lindenmeyer O. (1863) Beiträge zur Kenntniss des Cholesterins. J. Prakt. Chemie 90, 321-331.

Lindet L. (1889) Sur le dosage simultané du saccharose et du raffinose dans les produits commerciaux. Bull. Soc. Chim. 2, 327-331.

Lindet L. and L. Ammann (1907) Sur le pouvoir rotatoire des protéines extraites des farines de céréales par l'alcool aqueux. Bull. Soc. Chim. 1, 968-974.

Lindh A.E. (1925) Über die K- Röntgenabsorptionsspektra der Elemente Si, Ti, V, Cr, Mn und Fe. Zeitschr. Phys. 31, 210-218.

Link D. (1797) Ueber die Verdoppelung der Bilder in durchsichtigen Steinen. Crells Chem. J., French abstract in Ann. Chim. 28, 84-85, 1798. Referred to by Verdet 1869.

Linné C. (1748) Systema Naturæ Sistens Regna Tria Naturæ...., 6th ed. G. Kiesewetter, Stockholm, 224 p.

Lintner C.J. (1907) Über die Bestimmung des Stärkegehaltes in Cerealien durch Polarisation. Zeitschr. Unters. Nahr.- Genussm. 14, 205-208. More in 16, 509-512, 1908.

Lintner C.J. and E. Kröber (1895) Zur Kenntniss der Hefeglykase. Ber. Deutsch. Chem. Gesellsch. 28, 1050-1056.

Lippich F. (1863) Über die Natur der Ätherschwingungen im unpolarisirten und theilweise polarisirten Lichte. Sitzungsber. Akad. Wiss. Wien 48(2), 146-198.

Lippich F. (1882) Über polaristrobometrische Methoden. Sitzungsber. Akad. Wiss. Wien 85(2), 268-326. See also his paper in Zeitschr. Instrumentenk. 2, 167-174.

Lippich F. (1885) Über polaristrobometrische Methoden, insbesondere über Halbschattenapparate. Sitzungsber. Akad. Wiss. Wien 91(2), 1059-1091.

Lippich F. (1896) Dreitheiliger Halbschatten-Polarimeter. Sitzungsber. Akad. Wiss. Wien 105(2), 317-361. Improved polarimeter design.

Lippmann E.O. v. (1899) Ueber ein Vorkommen von Cholesterin in Producten der Rübenzucker-Fabrication. Ber. Deutsch. Chem. Gesellsch. 32, 1210-1212.

Lippmann E.O. v. (1904) Die Chemie der Zuckerarten I-II, 3rd ed. F. Vieweg & Sohn, Braunschweig, 2003 p.

Lipton L. (2001) The stereoscopic cinema: from film to digital projection. SMPTE Journal, Sept. 2001, 586-593.

Listing J.B. (1855) Zusatz zu der vorgehenden Abhandlung. Liebig's Ann. Chemie 96, 93-99. On measurement of sugar in diabetic urine.

Litterscheid F.M. (1924) Über ein Taschen-Polarisationsmikroskop zur Vorkontrolle frischer Butter. Zeitschr. Unters. Nahr.- Genussm. 48, 53-57. More in Zeitschr. Angew. Chemie 38, 135-140, 1925.

Littleton J.T. (1911) The optical constants of alloys as a function of composition. Phys. Rev. 33, 453-466. More in 35, 306-311, 1912.

Liveing G. D. and J. Dewar (1882) On the spectrum of water. No. II. Proc. Royal Soc. 33, 274-276. On the spectrum of carbon, 403-410. General observations on the spectra of carbon and its compounds. 34, 123-130. Iceland spar prisms used in the ultra-violet.

Liveing G.D. and J. Dewar (1883) On the ultra-violet spectra of the elements. Parts I & II. Phil. Trans. Royal Soc. 174, 187-222.

Liveing G.D. and J. Dewar (1889) On the spectrum of the oxyhydrogen flame. Phil. Trans. Royal Soc. 179, 27-42. Abstract in Proc Royal Soc. 43, 347-348, 1888.

Liveing G.D. and J. Dewar (1901a,b) The spectrum of the more volatile gases of atmospheric air, which are not condensed at the temperature of liquid hydrogen. Preliminary notice. Proc. Royal Soc. 67, 467-474. On the separation of the least volatile gases of atmospheric air, and their spectra. 68, 389-398.

Lloyd H. (1833) On the phenomena presented by light in its passage along the axes of biaxial crystals. Trans. Royal Irish Acad. 17, 145-158, also Phil. Mag. 2, 112-120, 207-210. Conical refraction.

Lloyd H. (1834) Report on the progress and present state of physical optics. British Assoc. Report 4, 295-413.

Lloyd H. (1857) Elementary Treatise on the Wave-Theory of Light, 2nd ed. Longman, Brown,Green, Longmans, and Roberts, London, 208 p.

Lock C.G.W., G.W. Wigner and R.H. Harland (1882) Sugar Growing and Refining. E. & F.N. Spon, London, 752 p.

Lockyer N. (1904) Further researches on the temperature classification of stars. Proc. Royal Soc. 73, 227-238. Continued in 76, 145-151, 1905.

Locquin R. (1907) Dédoublement de l'acide α-amino-β-méthyl-β-éthyl-propionique en ses deux inverses optiques. Bull. Soc. Chim. 1, 595-601, 601-607.

Löhlein M. (1905) Über Fettinfiltration und fettige Degeneration der Niere des Menschen. Virchow's Arch. Pathol. Anat. 180, 1-50.

Loiseau D. (1876) Sur uns nouvelle substance organique cristallisée. Comptes Rendus Acad. Sci. Fr. 82, 1058-1060.

Lommel E. (1878) Theorie der Doppelbrechung. Ann. Phys. 4, 55-67. More in 15, 378-390, 1882.

Lommel E. (1881a) Ein Polarisationsapparat aus Magnesium-Platincyanür. Ann. Phys. 13, 347-353. One of many attempts at replacing Nicol prisms.

Lommel E. (1881b) Ueber das Dispersionsgesetz. Ann. Phys. 13, 353-361.

Lommel E. (1881c) Theorie der Drehung der Polarisationsebene. Ann. Phys. 14, 523-533.

Lommel E. (1884) Die Fluorescenz des Kalkspathes. Ann. Phys. 21, 422-427.

Lommel E. v. (1898) Ueber aus Kalkspath und Glas zusammengesetzte Nicol´sche Prismen. Sitzungsber. Bayer. Akad. München 28, 111-116.

Long J.H. (1893) Some experiments on American oil of turpentine. J. Anal. Appl. Chem. 7, 99-108. More in J. Am. Chem. Soc. 16, 844-847, 1894.

Longchambon L. (1922) Recherches expérimentales sur le pouvoir rotatoire des corps cristallisés. Bull. Soc. Fr. Minéral. 45, 161-252.

Lorentz H.A. (1877, 1878) Ueber die Theorie der Reflexion und Refraction des Lichtes. Schlömilch's Zeitschr. Mathem. Phys. 22, 1-30, 205-219 and 23, 197-210.

Lorentz H.A. (1897) Ueber den Einfluss magnetischer Kräfte auf die Emission des Lichtes. Ann. Phys. 63, 278-284. Theory of the Zeeman effect.

Lorentz H.A. (1898) Sur la polarisation partielle de la lumière émise par une source lumineuse dans un champ magnétique. Arch. Néerl. 2, 1-20.

Lorentz H.A. (1915) The Theory of Electrons, 2nd ed. B.G. Teubner, Leipzig, 343 p. Few changes from the first edition in 1909.

Lorenz L.V. (1860) Bestimmung der Schwingungsrichtung des Lichtaethers durch die Polarisation des gebeugten Lichtes. Ann. Phys. 187, 315-328, 460-473.

Lotmar W. (1938) Über den Zusammenhang zwischen Depolarisationsgrad und Teilchen-eigenschaften bei der Lichtstreuung in Kolloiden. Helv. Chim. Acta 21, 792- 812, more 953-984.

Louyet P. (1849) Recherches sur l'équivalent du fluor. Ann. Chim. 25, 291-310.

Love A.E.H. (1927) A Treatise on the Mathematical Theory of Elasticity, 4th ed. Cambridge University Press, 643 p.

Löwe F. (1925) Optische Messungen des Chemikers und des Mediziners. Technische Fortschrittsberichte VI. Th. Steinkopf, Dresden, 166 p.

Lowry T.M. (1899) Studies of the terpenes and allied compounds IV. Nitrocamphor as an example of dynamic isomerism. J. Chem. Soc. Trans. 75, 211-244.

Lowry T.M. (1908) Measurement of rotatory dispersive power in the visible and ultra-violet regions of the spectrum. Proc. Royal Soc. A81, 472-474. Uses a composite quartz-calcite lens, see also G. Bruhat and M. Pauthenier, C.R. 182, 888-890,1926.

Lowry T.M. (1913a) Applications of polarised light. Nature 91, 542-546.

Lowry T.M. (1913b) The rotatory dispersive power of organic compounds. I. The measurement of rotatory dispersion. J. Chem. Soc. Trans. 103, 1062-1067. II. The form of the rotatory-dispersion curves, 1067-1075. III. The measurement of magnetic rotatory dispersion, 1322-1331.

Lowry T.M. (1935) Optical Rotatory Power. Longmans, Green & Co., London, 483 p.

Lowry T.M. and T.W. Dickson (1914) Simple and complex rotatory dispersion. Trans. Faraday Soc. 10, 96-102.

Lowry T.M. and H.S. French (1924) Studies of valency. Part IV. Absorption spectra of camphor, benzylidenecamphor, and camphorquinone. Optical evidence of two types of conjugation. J. Chem. Soc. Trans. 125, 1921-1927.

Lowry T.M. and E.M. Richards (1924) The rotatory dispersive power of organic compounds. XIII. The significance of simple rotatory dispersion. J. Chem. Soc. Trans. 125, 2511-2524.

Lowry T.M. and W.R.C. Coode-Adams (1927) The rotatory dispersion of quartz in the infra-red, visible and ultra-violet regions of the spectrum. Phil. Trans. Royal Soc. A226, 391-466.

Lowry T.M. and M.A. Vernon (1928) An improved method of ultra-violet polarimetry. Anomalous rotary dispersion of sodium tartrate. Proc. Royal Soc. A119, 706-709.

Lowry W.D. (1943) Iceland spar. The Ore-Bin 5, 36-40.

Lucas W. (1882) The Telectroscope, or "Seeing by electricity". English Mechanic and World of Science no. 891, 151-152. See also his reminder in Nature, 27 June 1936.

Lummer O. (1896) [Paper on a new type of polarimeter, referred to by Landolt 1898]. Zeitschr. Instrumentenk. 16, 209-211.

Lummer O. (1905) Observations on vision in brightness and in obscurity, with a hypothesis on the cause of color-blindness Annual Rept. Smithsonian Institution 1904, 249-258, translated from Verh. Deutsch. Phys. Gesellsch. 1904.

Lummer O. (1909) Die Lehre der Strahlenden Energie (Optik), Book 3 of vol. 2 of Müller-Pouillets Lehrbuch der Physik und Meteorologie, 10th ed. by L. Pfaundler. F. Vieweg und Sohn, Braunschweig, 1189 p.

Lummer O. and E. Gehrcke (1902) Über den Bau der Quecksilberlinien; ein Beitrag zur Auflösung feinster Spektrallinien. Sitzungsber. Akad. Wiss. Berlin 1902, 11-17.

Lummer O. and E. Gehrcke (1903) Über die Anwendung der Interferenzen an planparallelen Platten zur Analyse feiner Spektrallinien. Ann. Phys. 10, 457-477.

Lummer O. and R. Kynast (1907) Spektralapparat für Polarisations- und Phasendifferenzmessungen. Ann. Phys. 22, 721-725, followed by a paper by R.K. on measurements.

Lundsgaard C. and S.A. Holbøll (1924) The effect of insulin and muscle tissue on glucose in vitro. J. Biol. Chem. 62, 453-469. More papers by them appeared in 1925.

Luquer L.M. (1894) The optical recognition and economic importance of the common minerals found in building stones. School of Mines Quarterly (Columbia College, New York) 15, 285-336.

Luther R. and G.S. Forbes (1909) A quantitative study of the photochemical reaction between quinine and chromic acid. J. Am. Chem. Soc. 31, 770-783.

Lutz É. (1872) Catalogue des Instruments d'Optique. Paris, 39 p.

Luynes V. de (1876) La trempe du verre et ses applications. La Nature 4(I), 118-122.

Luynes V. de (1879) Rapport... sur divers appareils présentés par M. Laurent, constructeur. Bull. Soc. Encouragem. 6, 426-428.

Luynes V. de and A. Girard (1875) Note sur le pouvoir rotatoire du sucre cristallisable et sur la prise d'essai des sucres soumis à l'analyse polarimètrique. Comptes Rendus Acad. Sci. Fr. 80, 1354-1357.

Lyot B. (1923) Étude des surfaces planétaires par la polarisation. Comptes Rendus Acad. Sci. Fr. 177, 1015-1017. Additions in 178, 1796-1798, 1924, as well as in 179 and 182.

Lyot B. (1926) Appareils permettant d'analyser des lumières très faiblement polarisées. Revue d'Optique 5, 108-118.

Lyot B. (1929) Polarisation de la planète Mercure. Comptes Rendus Acad. Sci. Fr. 189, 425-426, more in 191, 703-705, 1930.

Lyot B. (1933) Un monochromateur à grand champ utilisant les interférences en lumière polarisée. Comptes Rendus Acad. Sci. Fr. 197, 1593-1595. See Öhman 1938.

Lyot B. (1944) Le filtre monochromatique polarisant et ses applications en physique solaire. Ann. Astrophys. 7, 31-79. See also his paper in Comptes Rendus Acad. Sci. Fr. 212, 1013-1017, 1941.

Lyot B. (1945) Planetary and solar observations on the Pic du Midi in 1941, 1942 and 1943. Astrophys. J. 101, 255-259.

Macaluso D. and O.-M. Corbino (1898) Sur une nouvelle action subie par la lumière traversant certaines vapeurs métalliques dans un champ magnétique. Comptes Rendus Acad. Sci. Fr. 127, 548-551. More details appear in their papers in Nuovo Cimento.

MacCullagh J. (1831) On the double refraction of light in a crystallized medium, according to the principles of Fresnel. Trans. Royal Irish Acad. 16, Pt. 2, 65-78.

MacCullagh J. (1836, 1837) On the laws of reflexion from crystallized surfaces. Phil. Mag. 8, 103-108. On the laws of crystalline reflexion. 10, 42-45. More in Trans. Irish Acad. 18, 31-74, 1839.

MacCullagh J. (1839) On the dynamical theory of crystalline reflexion and refraction. Proc. Irish Acad. 1, 374-379. Additional work in 2, 96-102, 1840-44. The theory was published in full posthumously in Trans. Irish Acad. 21, 17-50, 1848.

MacCullagh J. (1841, published in 1844) On a mechanical theory which has been proposed for the explanation of circular polarization in liquids and circular and elliptic polarization in rock-crystal, or quartz, ... Proc. Irish Acad. 2, 139-163.

Mach E. (1873) Optisch-Akustische Versuche. J.G. Calve, Prague, 110 p. Experiments on double refraction, for instance in vibrating glass rods, are described on p. 1-46.

Mach E. (1875) Ueber einen Polarisationsapparat mit rotierendem Zerleger. Ann. Phys. 156, 169-172.

Mach E. and J. Merten (1876) Bemerkungen über die Änderung der Lichtgeschwindigkeit im Quarz durch Druck. Sitzungsber. Akad. Wiss. Wien 72(2), 315-328.

Mackenzie A.S. (1895) On the attractions of crystalline and isotropic masses at small distances. Phys. Rev. 2, 321-343.

Madan H.G. (1885) On a modification of Foucault´s and Ahrens´s polarising prisms. Nature 31, 371-372.

Madan H.G. (1890) Bertrand´s idiocyclophanous spar-prism. Nature 42, 52-53.

Madelung A. (1883) Beobachtungen mit Breithaupt´s Polarisationsmikroskop. Zeitschr. Kristallogr. 7, 73-76. Extract from an old manuscript.

Magnanini G. and T. Bentivoglio (1893) Intorno alla spettro di assorbimento delle soluzioni di alcuni cromoossalati della serie bleu. Rend. Accad. Linc. 2 (ii), 17-23.

Magnus G. (1866) Ueber die Polarisation der ausgestrahlten Wärme und ihren Durchgang durch parallele Platten. Ann. Phys. 127, 600-613.

Magnus-Levy A. (1901) Untersuchungen über die Acidosis im Diabetes melitus und die Säureintoxication im Coma diabeticum. Arch. Exper. Pathol. Pharmakol. 45, 389-434.

Maier J. (1865) Detection of the adulteration of essential oils with the saccharimeter. Am. J. Sci. 39, 273-275.

Maisel S. (1908) Un nouveau photomètre polariseur à scintillation. J. Phys. 7, 739-740, extract of a paper in a Russian journal.

Majorana Q. (1902) Nuovi fenomeni magneto-ottici presentati da speciali soluzioni magnetiche. Nuovo Cimento 4, 44-52. See also Comptes Rendus 135, 159-161, 235-237.

Malarski H. and L. Marchlewski (1912) Studien in der Chlorophyllgruppe. VI. Bestimmung des Chlorophylls in Pflanzenteilen. Biochem. Zeitschr. 24, 319-322.

Mallard E. (1876) Sur le système cristallin de plusieurs substances présentant des anomalies optiques. Comptes Rendus Acad. Sci. Fr. 82, 1063-1065, 1164-1167. More in Ann. Mines 10, 60-196, 1876 and in Bull. Soc. Minéral. Fr. 3, 3-20, 1880.

Mallard E. (1882) Sur la mésure de l´angle des axes optiques. Bull. Soc. Minéral. Fr. 5, 77-87. The method was improved by F. Becke in Min. Petr. Mitth. 14, 563-565, 1895.

Mallard E. (1886) Sur les hypotheses diverses proposées pour expliquer les anomalies optiques des minéraux. Bull. Soc. Fr. Minéral. 9, 54-74.

Mallard E. and H. Le Chatelier (1895) Sur la variation qu'éprouvent, avec la température, les biréfringences du quartz, de la barytine et du disthène. Ann. Chim. 6, 90-114. Extract in Bull. Soc. Fr. Minéral. 13, 123-129, 1890.

Malm E. (1761) De Refractionibus Crystalli Islandicae. Diss. Gradualis, Upsala, 10 p.

Malus E.L. (1807a) Traité d´optique. Mém. Sav. Étr. 2, 214-302 (published in 1811).

Malus E.L. (1807b) Mémoire sur la mesure du pouvoir réfringent des corps opaques. Bull. Soc. Philom. 1, 77-81. Transl. in Ann. Phys. 31, 225-234. Also in Mém. Sav. Étr. 2, 509-517, 1811.

Malus E.L. (1808a) Sur une propriété de la lumière réfléchie par les corps diaphanes. Nouv. Bull. Soc. Philom. 1, 266-269. More in Mém. Soc. Arcueil 2, 143-158, 1809. Transl. in Ann. Phys. 31, 286-297, 1809. Discovery of polarization by reflection.

Malus E.L. (1808b) Sur les phénomènes qui dépendent des formes des molécules de la lumière. Nouv. Bull. Soc. Philom. 1, 341-344, 353-355. Transl. in Ann. Phys. 32, 463-477, 1809.

Malus E.L. (1809) Sur une propriété des forces répulsives qui agissent sur la lumière. Mém. Soc. Arcueil 2, 254-267.

Malus E.L. (1810a) Mémoires sur les phénomènes qui accompagnent la réflexion et la réfraction de la lumière. Mém. de l'Institut 11 (pt. 2), 112-120. Transl. in Ann. Phys. 40, 119-131, 1812, see also a letter from Malus in 37, 109-113, 1811.

Malus E.L. (1810b) Mémoire sur l´axe de réfraction des cristaux et des substances organisées. Mém. de l'Institut 11 (pt. 2), 142-148, transl. in Ann. Phys. 40, 132-140.

Malus E.L. (1811) Théorie de la double réfraction. Mém. Sav. Étr. 2, 303-508. Awarded a prize by the Academy at its public session on 2 Jan 1810.

Mameli E. (1911) Sur le cubébine. Moniteur Scient. 75, 439-448, 449-455, 456-461, translated from Gazz. Chim. Ital. 37(2), 483-506. Continued in 82, 29-35, 1915.

Mandl L. (1839) Traité Pratique du Microscope, et de son Emploi dans l'Étude des Corps Organisés. J.-B. Baillière, Paris, 191 p.

Mannich C. (1912) Ueber Arbutin und seine Synthese. Arch. Pharmazie 250, 547-560

Mannich C. and K. Lenz (1920) Über eine Methode zur polarimetrischen Bestimmung der Stärke in Calciumchloridlösung. Zeitschr. Unters. Nahr.- Genussm. 40, 1-11.

Manning A.B. (1913) Note on the spectrum of the aluminium arc. Astrophys. J. 37, 288-291.

Maquenne L. (1887) Recherches sur l'inosite. Ann. Chim. 12, 80-129.

Maquenne L. (1891) Recherches sur la pinite et l'inosite dextrogyre (sennite, matézite et matézodambose). Ann. Chim. 22, 264-280.

Maquenne L. (1900) Les Sucres et leurs Principaux Derivés. Carré & Naud, Paris, 1032 p.

Marbach H. (1854) Die circulare Polarisation des Lichtes durch chlorsaures Natron. Ann. Phys. 91, 482-487. First instance of optical activity in a crystal other than quartz. This discovery was discussed e.g. by J.B. Biot in C.R. 40, 793-800, 1855.

Marbach H. (1855) Ueber die optischen Eigenschaften einiger Krystalle des tesseralen Systems. Ann. Phys. 94, 412-426. Early paper on so-called "optical anomalies". Continued in 99, 451-466, 1856.

Marcelin R. (1918) Structure des cristaux en lames très minces: nouvelle détermination expérimentale des grandeurs moléculaires. Ann. de Phys. 10, 189-194. Similar research on the thickness of liquid films had been carried out by P. Drude 1891.

Marchand R.F. and T. Scheerer (1850) Ueber das chemische Aequivalent des Magnesiums. J. Prakt. Chem. 50, 385-411.

Marchlewski L. and C.A. Schunck (1900) Zur Kenntniss des Chlorophylls. J. Prakt. Chemie 62, 247-265.

Marckwald W. (1899) Die Stereochemie des Stickstoffes. Ber. Deutsch. Chem. Gesellsch. 32, 3508-3510.

Marckwald W. (1904) Ueber asymmetrische Synthese. Ber. Deutsch. Chem. Gesellsch. 37, 349-354. Reply to comments, 1368-1370.

Marckwald W. and A. McKenzie (1899) Ueber eine principiell neue Methode zur Spaltung racemischer Verbindungen in die activen Bestandtheile. Ber. Deutsch. Chem. Gesellsch. 32, 2130-2136. More in 33, 208-210, 1900 and 34, 469-478, 1901.

Margo T. (1860) Über die Muskelfasern der Mollusken. Sitzungsber. Akad. Wiss. Wien 39, 559-582.

Marston A. (1893) The study of the distribution of strains by polarized light. Phys. Rev. 1, 127-138.

Martens F.F. (1900a) Über ein neues Polarisationsphotometer für weisses Licht. Phys. Zeitschr. 1, 299-303.

Martens F.F. (1900b) Neue Analysator- oder Messvorrichtungen für Saccharimeter. Zeitschr. Instrumentenk. 20, 82-85.

Martens F.F. (1901) Ueber die Dispersion ultravioletter Strahlen. Ann. Phys. 6, 603-640.

Martens F.F. (1902) Ueber den Einfluss des Atomgewichtes auf die Eigenschwingung, Dispersion und Farbe von durchsichtigen Elementen und Verbindungen. Verh. Deutsch. Phys. Gesellsch. 4, 138-166.

Martens F.F. (1903) Über ein neues, tragbares Photometer für weisses Licht. Verh. Deutsch. Phys. Gesellsch. 5, 149-156.

Martens F.F. and F. Grünbaum (1903) Über eine Neukonstruktion des Königschen Spektralphotometers. Ann. Phys. 12, 984-1003, followed by a paper by F.G. on uses.

Martin B. (1774) Two Essays on the Nature and Wonderful Properties of Island Crystal. The first is "Respecting its manifold and unusual refraction of light", 16 p., the other one deals with lenses made from Iceland spar, etc., 17 p. London. Also published by D. Brewster 1822-23 in his Edinb. Philos. J.

Martin W.H. (1920) The scattering of light by dust-free liquids. J. Phys. Chem. 24, 478-493. More in 26, 471-476, 1922.

Martin W.H. (1924) The relation between the depolarization of the scattered light and the Kerr effect in liquids. J. Phys. Chem. 28, 1284-1290.

Martin W.H. and S. Lehrman (1922) The scattering of light by dust-free liquids. II. J. Phys. Chem. 26, 75-88. More (on temperature effects) in 27, 558-564, 1923.

Mascart E. (1864, 1867) Recherches sur la spectre solaire ultra-violet et sur la détermination des longueurs d´onde. Ann. École Normale 1, 219-262. Note sur les formules de dispersion 263-267. Extract in Comptes Rendus Acad. Sci. Fr. 58, 1111-1114. Continuation, with measurements on Iceland spar 4, 7-36.

Mascart E. (1866) Sur la direction des vibrations dans la lumière polarisée. Comptes Rendus Acad. Sci. Fr. 63, 1005-1007. Translation in Phil. Mag. 33, 319-320, 1867.

Mascart E. (1869) Sur la visibilité des rayons ultra-violets. Comptes Rendus Acad. Sci. Fr. 68, 402-403. Mentions a spectrometer with all parts made of Iceland spar.

Mascart E. (1872, 1874) Sur les modifications qu'éprouve la lumière par suite du mouvement de la source lumineuse et du mouvement de l´observateur. Ann. École Normale 1, 157-214 and 3, 363-420. Extract in J. Phys. 4, 129-134, 1875.

Mascart E. (1889, 1891, 1893) Traité d'Optique, vol. I-III. Gauthier-Villars et Fils, Paris, 638 + 643 + 692 p.

Maskelyne N. Story (1870) On the mineral constituents of meteorites. Phil. Trans. Royal Soc. 160, 189-214. Continued (using a Nörrenberg microscope) in 161, 359-367, 1871.

Mason S.F. (1982) Molecular Optical Activity and the Chiral Discriminations. Cambridge University Press, Cambridge, 273 p.

Masson D. Orme (1900) Iceland spar as a standard in volumetric analysis. Chem. News 81, 73-75.

Masson J.I. Orme (1911) The solubility of electrolytes in aqueous solutions. Part I. Solubility of salts in the corresponding acids. J. Chem. Soc. Trans. 99, 1132-1139.

Mathieu J.-P. (1956) Rapport sur les progrès récents de la question du dichroisme circulaire. In: Oeuvres Scientifiques de Aimé Cotton. C.N.R.S., Paris, 91-97.

Matignon C. (1923) Action des temperatures elevées sur quelques substances réfractaires. Comptes Rendus Acad. Sci. Fr. 177, 1290-1293.

Matsuyama M. (1920) On some physical properties of ice. J. Geol. 28, 607-631.

Matteucci C. (1848) Experiments on the influence of magnetism on polarized light. Proc. Royal Soc. 5 (1843-50), 741-742. Probably extracted from a larger article in Italian.

Matteucci C. (1856) Sur un appareil destiné à démontrer et mesurer la différence du conductibilité du bismuth cristallisé. Comptes Rendus Acad. Sci. Fr. 42, 1132-1133.

Mauguin C. (1911) Sur les cristaux liquides de Lehmann. Bull. Soc. Fr. Minéral. 34, 71-117.

Mauskopf S.H. (1976) Crystals and compounds. Molecular structure and composition in nineteenth-century French science. Trans. Am. Philos. Soc. 66(3), 1-82.

Mauthner J. (1882) Das optische Drehungsvermögen des Tyrosins und Cystins. Monatsh. Chemie 3, 343-347. More in Zeitschr. Physiol. Chemie 7, 222-226, 1883.

Mauthner J. (1906) Neue Beiträge zur Kenntnis des Cholesterins II. Über das Drehungsvermögen einiger Cholesten- und Cholestankörper. Monatsh. Chemie 27, 421-431.

Maxwell J.C. (1853) On the equilibrium of elastic solids. Trans. Royal Soc. Edinb. 20, 87-120. Photoelastic measurements with polarized light. Abstract in Proc. R.S. 1850.

Maxwell J.C. (1856) On the unequal sensitivity of the foramen centrale to light of different colours. British Assoc. Report 26, pt. ii, 12. See Schuster 1890.

Maxwell J.C. (1858) On Faraday's lines of force. Trans. Cambr. Philos. Soc. 10, 27-83.

Maxwell J.C. (1862a,b) On physical lines of force. III. The theory of molecular vortices applied to statical electricity. Phil. Mag. 23, 12-24. IV. The theory of molecular vortices applied to the action of magnetism on polarized light, 85-95.

Maxwell J.C. (1864) A dynamical theory of the electromagnetic field. Proc. Royal Soc. 13, 531-

536 and Phil. Mag. 29, 152-157. His major paper with the same title appeared in Phil. Trans. Royal Soc. 155, 459-512, 1865.

Maxwell J.C. (1873) Treatise on Electricity and Magnetism I-II. Macmillan & Co. London, 425+444 p.

Maxwell J.C. (1873-74) On double refraction of a viscous fluid in motion. Proc. Royal Soc. 22, 46-47. Translation in Ann. Phys. 151, 151-154.

Mayer J.T. (1812, 1815) De polaritate luminis. Comm. Soc. Reg. Sci. Gött. 2, 1811-13, extract in Gött. Gelehrte Anz. No. 199, 1812. De apparentiis colorum a polaritate luminis pendentibus. Comm. Soc. Reg. Sci. Gött. 3, 77-105, 1814-15, extract in Gött. Gelehrte Anz. No. 170, 1815, 1681-1688.

Mayer P. and C. Neuberg (1900) Ueber den Nachweis gepaarter Glucuronsäuren und ihr Vorkommen im normalen Harn. Zeitschr. Physiol. Chemie 29, 256-273.

Mayer W. and B. Tollens (1907) Untersuchungen über die Fucose. Ber. Deutsch. Chem. Gesellsch. 40, 2434-2440.

McCaughey W.J. and W.H. Fry (1913) The Microscopic Determination of Soil-Forming Minerals. U.S. Dept. Agriculture, Bureau of Soils, Bull. 91, 100 p.

McConnel J.C. (1886) An experimental investigation into the form of the wave surface in quartz. Phil. Trans. Royal Soc. 177, 299-326, abstract in Proc. Royal Soc. 39, 409-411.

McConnel J.C. and D.A. Kidd (1888) On the plasticity of glacier and other ice. Proc. Royal Soc. 44, 331-367. More by J.C.M. in 49, 323-343, 1891.

McCulloh -. (1847) Some observations on the application of polarized light to chemical analysis. Proc. Am. Philos. Soc. 4, 349-351.

McDiarmid R.J. (1924) Photometric researches. The eclipsing variables TV Cassiopeiae, TW Cassiopeiae, TX Cassiopeiae, T Leonis Minoris, SS Camelopardalis. Contrib. Princeton Univ. Observ. 7, 64 p.

McDowell M.F. (1905) Circular dichroism in natural rotary solutions. Phys. Rev. 20, 163-171.

McElheny V.K. (1998) Insisting on the Impossible. The Life of Edwin Land. Perseus Books, Cambridge, Mass., 510 p.

McGraw-Hill Encyclopedia of Science and Technology (1992), 7th ed. Various articles.

McGregor R.R. (1954) Silicones and their Uses. McGraw-Hill Ltd., London, 302 p.

McKenzie A. and A. Harden (1903) The biological method for resolving inactive acids into their optically active components. J. Chem. Soc. Trans. 83, 424-438.

McKenzie A. and H. Wren (1907) Studies in asymmetric synthesis VI. The asymmetric synthesis of the optically active tartaric acids. J. Chem. Soc. Trans. 91, 1215-1228.

McKenzie A. and G.W. Clough (1908) The displacement of halogen in l-phenyl-chloroacetic acid by hydroxy- and methoxy-groups. A contribution to the chemistry of the Walden inversion. J. Chem. Soc. Trans. 93, 811-825.

McKenzie A. and H. Wren (1910) Optically active glycols derived from l-benzoin and from methyl l-mandelate. J. Chem. Soc. Trans. 97, 473-486.

McKenzie A. and G. Martin (1913) Optically active glycols derived from the phenyl-lactic acids. Part I. J. Chem. Soc. Trans. 103, 112-119.

McLean R.C. (1919) Studies in the ecology of tropical rain-forest. J. Ecol. 7, 121-172.

McWilliam A. and P. Longmuir (1907) General Foundry Practice. C. Griffin & Co., London, 383 p.

Mecklenburg W. (1914) Ueber die Messung des Tyndalleffekts in Kolloiden. Koll. Zeitschr. 14, 172-181.

Mecklenburg W. (1915) Die Untersuchung von trüben Lösungen. Naturwissensch. 3, 317-323. Describes a “Tyndallmeter” incorporating three Nicol prisms.

Mees C.E.K. and S.E. Sheppard (1904) Über Apparate zu sensitometrischen Untersuchungen, mit einer geschichtlichen Zusammenfassung. Zeitschr. Wissensch. Photogr. 2, 303-336, translated from Photogr. J. 44. See also their paper: Theory of photographic processes, Proc. Royal Soc. 74, 447-473, and their book on that topic published in 1907. Mees was Kodak's director of research in 1914-49.

Meigen W. (1907) Beiträge zur Kenntnis des kohlensauren Kalkes III. Ber. Naturf. Gesellsch. Freib. in Breisgau 15, 55-74.

Meigen W. and A. Spreng (1908) Über die Kohlehydrate der Hefe. Zeitschr. Physiol. Chemie 55, 48-73.

Meisenheimer J. (1908) Eine neue Art von Asymmetrie beim Stickstoffatom. Ber. Deutsch. Chem. Gesellsch. 41, 3966-3976.

Meisenheimer J. and L. Lichtenstadt (1911) Über optisch-aktive Verbindungen des Phosphors. Ber. Deutsch. Chem. Gesellsch. 44, 356-359.

Meisenheimer J., L. Angermann, O. Finn and E. Vieweg (1924) Versuche zur Darstellung optisch-aktiver Verbindungen des dreiwertigen Stickstoffs. VI. Ber. Deutsch. Chem. Gesellsch. 57, 1744-1759.

Meisling A.A. (1904) Ein Polarisationskolorimeter. Zeitschr. Anal. Chemie 43, 137-146.

Meissl E. (1880) Das spezifische Drehungsvermögen der Lactose. J. Prakt. Chemie 22, 97-103.

Meissl E. (1882) Ueber Maltose. J. Prakt. Chemie 25, 114-130.

Melander G. (1897) Sur un spectro-photomètre construit pour distinguer directement les raies telluriques dans le spectre solaire. Öfvers. Finska Vetenskaps-Societetens Förhandl. 39, 247-255.

Melloni M. (1836, 1837) Mémoire sur la polarisation de la chaleur. Ann. Chim. 61, 375-410 and 65, 5-68. See also his papers in Comptes Rendus Acad. Sci. Fr. 2, 95-100 and 140-145, 1836, 3, 133-135, 1836 and 5, 530-535, 1837.

Melloni M. (1842) Sur l'identité des diverses radiations lumineuses, calorifiques, et chimiques. Comptes Rendus Acad. Sci. Fr. 15, 454-460.

Menier E.-J. (1860) Catalogue Commercial, Maison Central de Droguerie. 5th ed. Paris, 672 p.

Menzies A.C. (1931) The normal vibrations of carbonate and nitrate ions. Proc. Royal Soc. A134, 265-277.

Mering J.v. and O. Minkowski (1890) Diabetes mellitus nach Pankreasexstirpation. Arch. Experim. Pathol. Pharmakol. 26, 371-387.

Merrill G.P. (1901) Guide to the study of the collections in the section of applied geology. The nonmetallic minerals. In: Annual Report of the Board of Regents of the Smithsonian Institution for 1898-99, 155-483. Iceland spar is covered on p. 258-262.

Merrill G.P. (1905) The Non-Metallic Minerals. Their Occurrence and Uses. J. Wiley & Sons, New York, 414 p. A 2nd edition appeared in 1910, 432 p.

Merritt E. (1894-95) On the absorption of certain crystals in the infra-red as dependent on the plane of polarization. Phys. Rev. 2, 424-441. Transl. in Ann. Phys. 55, 49-64, 1895.

Merton T.R. and J.W. Nicholson (1918) On phenomena relating to the spectra of hydrogen and helium. Phil. Trans. Royal Soc. A217, 237-278.

Mesnager A. (1901) Contribution à l'étude de la déformation élastique des solides. Ann. Ponts Chaussées 4, 129-190.

Mesnager A. (1913) Détermination complète sur un modèle réduit des tensions qui se produiront dans un ouvrage. Ann. Ponts Chaussées 16, 135-186. Extract in C.R. 155, 1071-1072, 1912. See also Engineering 101, 468-470, 1916. Glass-model photoelasticity study of tensions in a bridge.

Messerschmitt J.B. (1885) Spectralphotometrische Untersuchungen einiger photographischer Sensibilisatoren. Ann. Phys. 25, 655-673.

Messerschmitt J.B. (1888) Ueber diffuse reflexion. Ann. Phys. 34, 867-896.

Metz G. de (1902) Double réfraction accidentelle des liquides mécaniquement déformés. Comptes Rendus Acad. Sci. Fr. 134, 1353-1356. More in 136, 604-606, 1903.

Metzner P. (1920) Über Mikroprojektion im polarisierten Licht mit einfachen Hilfsmitteln. Zeitschr. Wissensch. Mikrosk. 37, 273-287.

Meyer E. and E.E. Butterfield (1914) The color-index of the red blood corpuscles. Arch. Internal Medicine 14, 94-103.

Meyer O. (1883) Ätzversuche am Kalkspath. N. Jahrb. Mineral. 1883(1), 74-78.

Meyer W.F. (1920) A study of certain nebulae for evidences of polarization effects. Lick Observ. Bull. 328, p. 68-78 of vol. X.

Meyerhof O. (1914) Über Hemmung von Fermentreaktionen durch indifferente Narkotika. Pflüger's Arch. Physiol. 157, 251-306.

Meyerstein M. (1870) Das Spectrometer, 2nd ed. An advertising brochure extracted in Carl's Repertorium 6, 404-406. Deuerlich, Göttingen.

Michaelis L. and M. Menten (1913) Die Kinetik der Invertinwirkung. Biochem. Zeitschr. 49, 333-369. Foundation of modern enzyme kinetics.

Michaelis L. and P. Rona (1908) Untersuchungen über den Blutzucker. IV. Biochem. Zeitschr. 14, 476-483.

Michel-Lévy A. (1877) De l´emploi du microscope polarisant à lumière parallèle pour la détermination des espèces minérales en plaques minces. Ann. Mines 12, 392-471. His first papers on thin-section studies with polarizing microscopes date from 1875.

Michel-Lévy A. (1883) Mesure du pouvoir biréfringent des minéraux en plaque mince. Bull. Soc. Minéral. Fr. 6, 143-161. Describes a new accessory for microscopes, with Nicol prisms.

Michel-Lévy A. and A. Lacroix (1888) Les Minéraux des Roches. Baudry & C^{ie}, Paris, 334 p.

Michelson A.A. (1897) Radiation in a magnetic field. Phil. Mag. 44, 109-115 and Astrophys. J. 6, 48-54.

Michelson A.A. (1898) Radiation in a magnetic field. Phil. Mag. 45, 348-356 and Astrophys. J. 7, 131-138. See also his reply to T. Preston in Nature 59, 440-441, 1899.

Mie G. (1908) Beitrage zur Optik trüber Medien, speziell kolloidaler Metallösungen. Ann. Phys. 25, 377-445. See also Steubing 1908.

Miller L.B. and J.C. Witt (1929) Solubility of calcium hydroxide. J. Phys. Chem. 33, 285-289.

Miller R.F. (1925) The optical constants of selenium and tellurium for wavelengths from 3000 to 5000 Angstrom. J. Opt. Soc. Am. 10, 621-634, with equipment from Weld 1922.

Miller W.A. (1862) On the photographic transparency of various bodies, and on the photographic effects of metallic and other spectra obtained by means of the electric spark. Phil. Trans. Royal Soc. 152, 861-887.

Milligan L.H. (1927) Abrasives and grinding. Ind. Eng. Chem. 19, 1127-1131.

Millikan R.A. (1895) A study of the polarization of light emitted by incandescent solid and liquid surfaces. Phys. Rev. 3, 81-99, 177-192. See Arago 1852.

Millikan R.A. (1917a) A redetermination of the value of the electron and of related constants. Proc. Nat. Acad. Sci. 3, 231-236.

Millikan R.A. (1917b) Radiation and atomic structure. Phys. Rev. 10, 194-205.

Milne J. R. (1904) A new form of spectrophotometer. Proc. Royal Soc. Edinb. 25, 338-354. Also in Proc. Optical Convention 1905.

Mills W.H. and A.M. Bain (1910) Optically active salts of 4-oximinocyclohexane-carboxylic acid and the configuration of the oximino-group. J. Chem. Soc. Trans 97, 1866-1882. More in 105, 64-72, 1914.

Milner H.B. (1922) An Introduction to Sedimentary Petrography. T. Murby & Co., London, 125 p.

Minkowski O. (1884) Ueber das Vorkommen von Oxybuttersäure im Harn bei Diabetes mellitus. Arch. Exper. Pathol. Pharmakol. 18, 35-48 and especially Nachtrag, 147-150.

Minkowski R. (1921) Untersuchungen über die magnetische Drehung der Polarisationsebene in nichtleuchtendem Na-Dampf. Ann. Phys. 66, 206-226.

Minor R.S. (1903) Dispersion einiger Metalle, besonders für ultraviolette Strahlen. Ann. Phys. 10, 581-622. Employs equipment for light analysis invented by Voigt 1901.

Mitchell G.A. (1990) Methods of starch analysis. Stärke 42, 131-134.
Mitchell S. (1933) The Cotton Effect and Related Phenomena. G. Bell & Sons, London, 92 p.
Mitscherlich E. (1818-19) Ueber die Krystallisation der Salze, in denen der Basis mit zwei Proportionen Sauerstoff verbunden ist. Abh. Akad. Wiss. Berlin, 1818-19 (Phys.), 427-437. Early work on isomorphous compounds.
Mitscherlich E. (1823) Über das Verhältniss der Krystallform zu den chemischen Proportionen. Vierte Abhandlung: über die Körper, welche in zwei verschiedenen Formen krystallisieren. Abh. Akad. Wiss. Berlin 1822-23, 43-48.
Mitscherlich E. (1825) Über die Ausdehnung der krystallisirten Körper durch die Wärme. Abh. Akad. Wiss. Berlin 1825, 201-212. Also described briefly in Ann. Phys. 1, 125-127, 1824. More in Ann. Phys. 41, 213-216, 1837. First description of the change in shape exhibited by (Iceland spar) crystals during heating.
Mitscherlich E. (1831) Ueber die Veränderung des Arragonits in Kalkspath. Ann. Phys. 21, 157-159.
Mitscherlich E. (1841) Chemische Zersetzung und Verbindung vermittels Contactsubstanzen. Ber. Akad. Wiss. Berlin 1841, 379-396, continued in 1842-43.
Mitscherlich E. (1844) Lehrbuch der Chemie, vol. I, part 1, 4th ed. E.S. Mittler, Berlin, 609 p.
Mittelstaedt O. (1929) Die Bestimmung der Lichtgeschwindigkeit unter Verwendung des elektrooptischen Kerreffektes. Ann. Phys. 2, 285-312.
Miura K. (1895) Beiträge zur alimentären Glykosurie. Zeitschr. Biol. 32, 281-303.
Moe H. (1990) Mikroskopets Historie. Rhodos Forlag, Copenhagen, 261 p.
Moelwyn-Hughes E.A. (1930) The enzymic hydrolysis of phloridzin. J. Gen. Physiol. 13, 807-817.
Moenke H. and L. Moenke-Blankenburg (1965) Optische Bestimmungsverfahren und Geräte für Mineralogen und Chemiker. Akademische Verlagsgesellsch., Leipzig, 568 p.
Mohl H.v. (1858) On the investigation of vegetable tissue by the aid of polarized light. Ann. Nat. Hist. 1, 198-209, 263-275, translated from Bot. Zeitung 16.
Mohl H. v. (1859) Ueber die Einrichtung des Polarisationsmikroskops zum Behufe der Untersuchung organischer Körper. Ann. Phys. 108, 178-190. Mohl criticises some previous attempts at using polarized light in biological research. See also Valentin 1861.
Moigno F. (1842-44) Théorie mathématique de la lumière, Rev. Sci. 11, 219-241, 337-358; 12, 350-372, 13, 545-578 and 15, 105-136, 220-255; 18, 5-45, 161-197.
Möller W. (1885a,b) Experimentelle Untersuchung des Lichtemanationsgesetzes glühender Körper. Ann. Phys. 24, 266-281. Über das Wild'sche Photometer, 446-454.
Monckhoven D.v. (1877) Sur les moyens propre à la reproduction photographique des spectres ultra-violets des gaz. Bull. Acad. Roy. Belg. 43, 187-192.
Monge G. (1789?) [Paper mentioning certain refraction effects in Iceland spar, presented to the Academy of Sciences in April 1786. Referred to by Hauy 1792, Billet 1858-59, Barnard 1863, Paulsen 1893 and Dictionary of Scientific Biography 1980-90, without quoting a printed source.]
Mörner C.T. (1912) Über Ovomucoid und Zucker in dem Weissen der Vogeleier; eins systematische Untersuchung. Zeitschr. Physiol. Chemie 80, 430-473.
Morozewicz J. (1898) Experimentelle Untersuchungen über die Bildung der Minerale im Magma. Mineral. Petrogr. Mitt. 18, 1-90, 105-238.
Morrison-Low A.D. and J.R.R. Christie (eds.,1984) "Martyr of Science". Sir David Brewster 1781-1868. Royal Scottish Museum, Edinburgh, 138 p. Includes bibliography.
Morse L.B. (1907) The selective reflection of salts of carbonic and other oxygen acids. Astrophys. J. 26, 225-243.
Mott B.W. and H.R. Haines (1951) Examination of metals under polarized light. I. Theory and apparatus. II. Applications. Research 4, 24-33, 63-73.

Mouton L. (1877) Recherches sur la réflexion métallique des rayons calorifiques obscurs et polarisés. Comptes Rendus Acad. Sci. Fr. 84, 650-653. More in Ann. Chim. 13, 1878.

Mouton L. (1879) Sur les lois de la dispersion des rayons calorifiques obscurs et la mesure de leurs longueurs d'onde. Ann. Chim. 18, 145-189. See also his papers in Comptes Rendus Acad. Sci. Fr. 88, 967-970, 1078-1082. Mouton's methods were improved by E. Carvallo in the 1890s.

Mügge O. (1883) Beiträge zur Kenntniss der Structurflächen des Kalkspathes und über die Beziehungen derselben untereinander und zur Zwillingsbildung am Kalkspath und einigen anderen Mineralien. N. Jahrb. Mineral. 1883(1), 32-54, 81-85.

Mügge O. (1895) Ueber die Plasticität der Eiskrystalle. N. Jahrb. Mineral. 1895(2), 211-228. More in 1900(2), 80-98.

Mügge O. (1898) Ueber Translationen und verwandte Erscheinungen in Krystallen. N. Jahrb. Mineral. 1898(1), 71-158.

Mukherji B.K., A.K. Battacharji and N.R. Dhar (1928) The variation of extinction-coefficient with temperature. J. Phys. Chem. 32, 1834-1840.

Mülheims A. (1888) Über eine neue Art der Axenwinkelmessung und über die Bestimmung der Brechungsexponenten. Zeitschr. Kristallogr. 14, 202-236.

Müller E.C. (1903) Optische Studien am Antimonglanz. N. Jahrb. Mineral. Beilageb. 17, 187-251.

Müller E. (1906) Untersuchungen über die Absorption des Lichtes in Lösungen. Ann. Phys. 21, 515-534.

Müller E. (1907) Das optische Verhalten der kolloidalen Metalle. Ann. Phys. 24, 1-24.

Müller F. (1901) Beiträge zur Kenntnis des Mucins und einiger damit verwandter Eiweissstoffe. Zeitschr. Biol. 42, 468-564.

Müller G. (1882) Untersuchungen über die Helligkeitsänderungen in verschiedenen Theilen des Sonnenspectrums bei abnehmender Höhe der Sonne über dem Horisont. Astron. Nachr. 103, 241-252.

Müller G. (1883) Photometrische Untersuchungen. Publ. Astrophys. Observ. Potsdam 3(4), no. 12, 227-292.

Müller G. (1885) Einfluss der Temperatur auf die Brechung des Lichtes in einigen Glassorten, im Kalkspath und Bergkristall. Publ. Astrophys. Observ. Potsdam 4(1), no. 16, 149-216.

Müller G. (1891) Photometrische und spectroskopische Beobachtungen angestellt auf dem Gipfel des Säntis. Publ. Astrophys. Observ. Potsdam 8(1), no. 27, 1-101.

Müller G. (1901) Ueber eine Combination des Zöllner'schen Astrophotometers mit dem Keilphotometer. Astron. Nachr. 154, 381-384. More in 182, 197-212, 1909.

Müller G. (1912) Die Extinktion des Lichtes in der Erdatmosphäre und die Energieverteilung im Sonnenspektrum auf der Insel Teneriffa. Publ. Astrophys. Observ. Potsdam 22(2), no. 64, 92 p.

Müller G. and P. Kempf (1894, 1899) Photometrische Durchmusterung des nördlichen Himmels, enthaltend alle Sterne der B.D. bis zur Grösse 7.5. I. Zone 0° bis +20° Declination. Publ. Astrophys. Observ. Potsdam 9, 501 p. II. Zone +20° bis +40° Declination. 13, 466 p. Further volumes appeared in 1903, 1906, and 1907. Over 14,000 stars were measured, with another 5,000 being added in a 1926 report by W. Hassenstein.

Müller G. and E. Hartwig (1918, 1920, 1922). Geschichte und Literatur der Veränderlichen Sterne I-III. Poeschel & Trepte, Leipzig, xvi + 401 + 468 + 137 p.

Müller J. (1834) Erklärung der isochromatischen Curven, welche einaxige parallel mit der Achse geschnittene Krystalle in homogenem polarisirten Lichte zeigen. Ann. Phys. 33, 282-300. Continued in 35, 95-111, 261-276, 1835.

Müller W. (1861) Beiträge zur Kenntniss der Molekularstruktur thierischer Gewebe. Zeitschr. Rat. Medicin 10, 173-192.

Müntz A. (1882) Sur la galactine. Ann. Chim. 26, 121-128.

Müntz A. and E. Aubin (1877) Recherches sur la mannite au point de vue de ses propriétés optiques. Ann. Chim. 10, 553-568.

Muralt A.L.v. and J.T. Edsall (1930) Studies in the physical chemistry of muscle globulin, III-IV. J. Biol. Chem. 89, 315-350, 351-386.

Murphy D.W. (1896) Methode zur Prüfung der Fresnel'schen Formeln in ihrer Abhängigkeit vom Einfallswinkel und der Farbe des Lichtes. Ann. Phys. 57, 593-603. See also his paper: Spectral photometric studies. Astrophys. J. 6, 1-21, 1897.

Musculus F. and F.J. v. Mering (1878-79) Ueber die Umwandlung von Stärke und Glycogen durch Diastas, Speichel, Pancreas- und Leberferment. Zeitschr. Physiol. Chemie 2, 403-419. More in 4 and 5, 1881.

N.N. (1833) Photometer von De Maistre, Quetelet und Arago. Ann. Phys. 29, 186-192.

Nachet A. (1979) Maison Nachet. Catalogues de Fonds de 1854 à 1910. A. Brieux, Paris. Reproductions of twelve catalogs of microscopes and accessories, with a preface.

Nägeli C. (1862) Beobachtungen über das Verhalten des polarisirten Lichtes gegen pflanzliche Organisation. Sitzungsber. Bayer. Akad. Wiss. München 1862(I), 290-324.

Nägeli C. and S. Schwendener (1867) Das Mikroskop. Theorie und Anwendung Desselben. W. Engelmann, Leipzig, 654 p. A second edition appeared in 1877, 679 p., an incomplete English translation of which was published in 1887.

Nakamura S. (1903) Ueber das Gesetz der Lichtgeschwindigkeit im Turmalin. Nachr. Gesellsch. Wiss. Göttingen 1903, 343-352.

Nakamura S. (1905) Ueber einen Quarzhalbschattenapparat. Centralbl. Mineral. 1905, 267-279.

Nasini R. (1882) Studi sul potere rotatorio dispersivo delle sostanze organiche. Atti Accad. R. Lincei 13, 129-158.

Nasini R. and G. Gennari (1896) Anomalien in der Rotationsdispersion der Äpfelsäure. Zeitschr. Physik. Chemie 19, 113-129.

Natanson L. (1909) Sur la polarisation elliptique de la lumière transmise à travers un milieu absorbant et doué du pouvoir rotatoire. J. Phys. 8, 321-347.

Nathanson J.B. (1916) The reflecting power of the alkali metals. Astrophys. J. 44, 137-168.

Naumann C.F. (1885) Elemente der Mineralogie, 12th ed. (revised by F. Zirkel). W. Engelmann, Leipzig, 782 p.

Navier C. (1827) Mémoire sur les lois de l´équilibre et du mouvement des corps solides élastiques. Mém. Acad. Sci. Fr. 7, 375-393 (read in 1821). Extract in Bull. Soc. Philom. 1823, 177-181.

Návrat V. (1911) Die Gesetze der diffusen Reflexion. Sitzungsber. Akad. Wiss. Wien 120(2a), 1229-1246.

Nef J.U. (1907) Dissociationsvorgänge in der Zuckergruppe. Liebig's Ann. Chemie 357, 214-312. More in 376, 1-119, 1910 and 403, 204-303, 1914.

Nelson E.M. (1902) New methods in microscope work. J. Royal Microsc. Soc. 1902, 142-147. Suggests using tourmaline polarisers.

Nelson E.M. (1919) A new form of polariser. J. Quekett Microsc. Club 14, 19-22.

Nelson J.M. and W.C. Vosburgh (1917) Kinetics of invertase action. J. Am. Chem. Soc. 39, 790-811.

Nelson J.M. and F.M. Beegle (1919) Mutarotation of glucose and fructose. J. Am. Chem. Soc. 41, 559-575.

Nencki M. and N. Sieber (1889) Über die Bildung der Paramilchsäure durch Gährung des Zuckers. Monatsh. Chemie 10, 532-540.

Nernst W. (1906) Über die Helligkeit glühender schwarzer Körper und über ein einfaches Pyrometer. Phys. Zeitschr. 7, 380-383.

Nernst W. and E.H. Riesenfeld (1903) Ueber quantitative Gewichtsanalyse mit sehr kleinen Substanzmengen. Ber. Deutsch. Chem. Gesellsch. 36, 2086-2093.

Nernst W. and H.v. Wartenberg (1906) Über den Schmelzpunkt des Platins und Palladiums. Verh. Deutsch. Phys. Gesellsch. 8, 48-58.

Nester J.F. and J.B. Schroeder (1967) Growth of calcite crystals from a molten flux by slow cooling. U.S. patent no. 3,345,141, 5 p.

Neubauer C. (1876) Ueber das optische Verhalten verschiedener Weine und Moste, sowie über die Erkennung mit Traubenzucker gallisirter Weine. Zeitschr. Anal. Chemie 15, 188-220. More in vols. 16 and 17.

Neubauer O. and K. Fromherz (1910-11) Über den Abbau der Aminosäuren bei der Hefegärung. Zeitschr. Physiol. Chemie 70, 326-350.

Neuberg C. (1899) Ueber die Reinigung der Osazone und zur Bestimmung ihrer optischen Drehungsrichtung. Ber. Deutsch. Chem. Gesellsch. 32, 3384-3388.

Neuberg C. (1902) Ueber die Constitution der Pankreasproteid-Pentose. Ber. Deutsch. Chem. Gesellsch. 35, 1467-1473. See also a paper by him and B. Brahn in 41, 3376-3381, 1908.

Neuberg C. (1903) Ueber die Spaltung von racemischen Aldehyden und Ketonen. Ber. Deutsch. Chem. Gesellsch. 36, 1192-1194.

Neuberg C. (1907) Zur Kenntnis der Raffinose. Abbau der Raffinose zu Rohrzucker und d-Galaktose. Biochem. Zeitschr. 3, 519-534.

Neuberg C. (1908) Die Entstehung des Erdöls. Biochem. Zeitschr. 7, 199-212.

Neuberg C. and W. Neimann (1905) Neue Reaktionen und Derivate der Glukuronsäure. Zeitschr. Physiol. Chemie 44, 97-113, with continuation on synthesis 114-126.

Neuberg C. and E. Kerb (1918) Die Überführung von Acetaldol in optisch aktives β-Butylenglykol durch Hefe. Biochem. Zeitschr. 92, 96-110.

Neuberg C., A. Levite and E. Schenck (1917) Über die Hexosediphosphorsäure, ihre Zusammensetzung und die Frage ihrer Rolle bei der alkoholischen Gärung sowie über das Verhalten der Dreikohlenstoffzucker zu Hefen. Biochem. Zeitschr. 83, 244-268.

Neubert H. (1925) Über Doppelbrechung und Dichroismus gefärbter Gele. Kolloidchem. Beihefte 20, 244-272.

Neumann C. (1863) Die Magnetische Drehung der Polarisationsebene des Lichtes. Versuch einer Mathematischen Theorie. Waisenhaus-Buchhandlung, Halle, 82 p.

Neumann C. (1864) Ueber die thermischen Axen der Krystalle des ein- und eingliedrigen Systems. Ann. Phys. 114, 492-504.

Neumann C. (1869) Ueber die Aetherbewegung in Krystallen. Mathem. Ann. 1, 325-358.

Neumann F.E. (1831) Untersuchung über die specifische Wärme der Mineralien. Ann. Phys. 23, 1-39.

Neumann F.E. (1832a) Theorie der doppelten Strahlenbrechung abgeleitet aus den Gleichungen der Mechanik. Ann. Phys. 25, 418-454.

Neumann F.E. (1832b) Theorie der elliptischen Polarisation des Lichtes, welche durch Reflexion von Metallflächen erzeugt wird. Ann. Phys. 26, 89-122.

Neumann F.E. (1833) Die thermischen, optischen und krystallographischen Axen der Krystallsystems des Gypses. Ann. Phys. 27, 240-274, more in 35, 81-95, 203-205, 1835.

Neumann F.E. (1834) Ueber das Elasticitätsmaass crystallinischer Substanzen der homoëdrischen Abtheilung. Ann. Phys. 31, 177-192.

Neumann F.E. (1835a) Ueber die optischen Eigenschaften der hemiprismatischen oder zwei- und eingliedrigen Krystalle. Ann. Phys. 35, 81-95, 203-205, see also p. 380-383.

Neumann F.E. (1835b) Theoretische Untersuchung der Gesetze, nach welchen das Licht an der Grenze zweier vollkommen durchsichtigen Medien reflectirt und gebrochen wird. Mathem. Abh. Akad. Wiss. Berlin, 160 p., issued 1837.

Neumann F.E. (1837a,b) Photometrisches Verfahren, die Intensität des ordentlichen und ausserordentlichen Strahlen, so wie die des reflectirten Lichts zu bestimmen. Ann. Phys. 40, 497-514. Beobachtungen über den Einfluss der Krystallflächen auf das reflectirte Licht und über die Intensität des ordentlichen und ausserordentlichen Strahls. 42, 1-29.

Neumann F.E. (1843) Gesetze der Doppelbrechung des Lichts in comprimirten oder ungleichförmig erwärmten unkrystallinischen Körpern. Abh. Akad. Wiss. Berlin, 1841(2), 254 p. Extract in Ann. Phys. 54, 449-476, 1841, with measurements on Iceland spar.

Newcomb-Engelmann (1921) Populäre Astronomie, 6th edition by H. Ludendorff. W. Engelmann, Leipzig, 889 p.

Newton I. (1706) Opticks, Latin version. Smith and Walford, London, 348 p. Queries by I.N. on double refraction appeared here and in the second English edition of 1718, but not in the original 1704 edition.

Nichols E.L. (1879, 1880) On the character and intensity of the rays emitted by glowing platinum. Am. J. Sci. 18, 446-468. More on high temperatures in 19, 42-49.

Nichols E.L. (1884) A spectro-photometric study of pigments. Am. J. Sci. 28, 342-348. Employs Nicol-prism photometer.

Nichols E.L. and W.S. Franklin (1889) A spectro-photometric comparison of sources of artificial illumination. Am. J. Sci. 38, 100-114.

Nichols E.L. and B.W. Snow (1892) Note on the selective absorption of light by optical glass and calc-spar. Phil. Mag. 33, 379-382.

Nichols E.L. and H.L. Howes (1916) The fluorescence and absorption of certain pleochroic crystals of uranium salts. Phys. Rev. 8, 364-385.

Nicol W. (1829) On a method of so far increasing the divergency of the two rays in calcareous-spar, that only one image may be seen at a time. Edinb. New Philos. J. 6, 83-84. Translated with discussion by J. Poggendorff in Ann. Phys. 29, 182-186, 1833, to be re-translated in Edinb. New Philos. J. 16, 372-376, 1833-34.

Nicol W. (1839) Notice concerning an improvement in the construction of the single vision prism of calcareous spar. Edinb. New Philos. J. 27, 332-333.

C.A. Niendorf (1931) Optik, Katalog K. Bernau, 59 p.

Nies E. (1926) Über den Einfluss tiefer Temperatur auf die Reflexion von Röntgenstrahlen an Kalkspat. Ann. Phys. 79, 673-694.

Nodot -. (1877) Microscope polarisant. J. Phys. 6, 250-253, see also La Nature 5(II), 117-118.

Nomarski G. (1954) Interféromètre à polarisation, French patent no. 1,059,123, 7 p. Also: Microinterféromètre différentiel à ondes polarisées. J. Phys. Radium 16, 9S-11S, 1955.

Noorden C.v. (1880) Beiträge zur quantitativen Spectralanalyse, insbesondere zur derjenigen des Blutes. Zeitschr. Physiol. Chemie 4, 9-35.

Nordenson J.W. (1921) Über die Grösse der Doppelbrechung der Hornhautsubstanz. Graefe's Arch. Ophthalmol. 105, 721-725.

Nordmann C. (1909a) L'espace céleste est-il un milieu dispersif? Bull. Astr. 26, 5-37, see also his paper in Rev. Gén. Sci. 20, 350-361. A discussion of his methods and conclusions by P.R. Heyl is in Astrophys. J. 30, 40-43.

Nordmann C. (1909b) Méthode permettant la mesure des températures effectives des étoiles. Premiers résultats. Comptes Rendus Acad. Sci. Fr. 149, 557-560. Improved results on p. 662-663 and 1038-1041. More in 173, 72-75, 1921 and 174, 1690-1692, 1922.

Nörrenberg J. (1888) Ueber Totalreflexion an doppeltbrechenden Krystallen. Ann. Phys. 34, 843-866. Using a method of Kohlrausch to study ray paths in calcite plates.

Nutting P.G. (1903a) Über ein neues Interferenz-Photometer und über das Reflektionsvermögen von Selenium, Cyanin und Glas für ultraviolette Strahlen. Phys. Zeitschr. 4, 201-206. Also in Phys. Rev. 16.

Nutting P.G. (1903b) Ultra-violet rotary dispersion. Phys. Rev. 17, 1-25.

Nutting P.G. (1906, 1911) A pocket spectrophotometer. Bull. Bureau of Standards 2, 317-318. A photometric attachment for spectroscopes, 7, 239-241.

Nutting P.G. (1912) A new method and instrument for determining the reflecting power of opaque bodies. Trans. Illum. Eng. Soc. 7, 412- , referred to by A.H. Taylor in J. Opt. Soc. Am. 4, 1920.

Nutting P.G. (1913) A new precision colorimeter. Bull. Bureau of Standards 9, 1-5. For an application of this instrument (U.S. patent no. 1,026,878, 8 p., 1912) which was sold by A. Hilger, see L.A. Jones in Phys. Rev. 4, 454-466, 1914.

Nyswander R.E. (1909) The absorption and reflection of calcite and aragonite for infra-red rays as dependent upon the plane of polarization. Phys. Rev. 28, 291-309.

Oechsner de Coninck W. (1911) Poids moléculaire de la chaux; poids atomique du calcium. Comptes Rendus Acad. Sci. Fr. 153, 1479-1480. Uses in part Iceland spar.

Oerum H.P.T. (1904) Kolorimetrische Eisenbestimmung im Blute mit Meisling‘s Universalkolorimeter. Zeitschr. Anal. Chemie 43, 147-159. More (on sugar) 356-371.

Oerum H.P.T. (1906) Unorganische und organische Eisenpräparate. Zeitschr. Exper. Pathol. Therapie 3, 145-156.

Offret A. (1890) De la variation, sous l’influence de la chaleur, des indices de réfraction de quelques espèces minérales, dans l’étendue du spectre visible. Bull. Soc. Fr. Minéral. 13, 405-697. Extract in Zeitschr. Krystallogr. 21, 1893.

Ohm G.S. (1855) Erklärung aller in einaxigen Crystallplatten zwischen geradlinig polarisirtem Lichte wahrnehmbaren Interferenz-Erscheinungen in mathematischer Form mitgetheilt. Abh. Bayer. Akad. Wiss. 7, 41-150, 265-370.

Öhman Y. (1933) On the use of Iceland spar in the intensity calibration of slit spectra. Arkiv Matem. Astr. Fys. 24A(10), 1-4. More in Stockh. Observ. Ann. 12(6), 16 p., 1936.

Öhman Y. (1938) A new monochromator. Nature 41, 157-158 and 291.

Olavius Ó. (1965) Ferdabók (Travels in Iceland in the late 18th century), vol. 2. Bókfellsútgáfan, Reykjavík, 383 p.

Olmstead L.B (1912) Circular dichroism and rotatory dispersion of certain salt solutions. Phys. Rev. 35, 31-46.

Onnes H. Kamerlingh and W.H. Keesom (1908) On the equation of state of a substance in the neighbourhood of the critical point liquid-gas. II. Spectrophotometric investigation of the opalescence of a substance in the neighbourhood of the critical state. Proc. Kon. Akad. Wet. Amsterdam 10, 611-623.

Onnes H. Kamerlingh, J. Becquerel and W.-J. de Haas (1925) Sur le pouvoir rotatoire de quelques mineraux paramagnétiques, aux très basses températures. Comptes Rendus Acad. Sci. Fr. 181, 838-841.

Oppler B. (1910) Zur Methodik der quantitativen Traubenzuckerbestimmung des Blutes. Zeitschr. Physiol. Chemie 64, 393-422. More in 75, 71-134, 1911.

Optical Society of America (1925) Spectrophotometry. Report of O.S.A. Progress Committee for 1922-3. J. Opt. Soc. Am. 10, 169-242.

Orcel J. (1972) Historical note, in: Microscopic Study of Opaque Minerals, by R. Galopin and N.F.M. Henry, 301-310. W. Heffer & Sons, Cambridge.

Osborne T.B. (1903) The specific rotation of the nucleic acid of the wheat embryo. Am. J. Physiol. 9, 69-71.

Osborne T.B. and I.F. Harris (1903) The specific rotation of some vegetable proteins. J. Am. Chem. Soc. 25, 842-848.

Ost H. (1891) Das Drehungsvermögen der Lävulose und des Invertzuckers. Ber. Deutsch. Chem. Gesellsch. 24, 1636-1645.

Ost H. (1906) Die Verwertung der Rübenzuckerschlempe nach dem Dessauer Verfahren. Zeitschr. Angew. Chemie 19, 609-615.

Ost H. and L. Wilkening (1910) Conversion of cellulose into sugar. Chemiker-Zeitung 34, 461-462.

Österreichische Central-Comité (1867) Bericht über die Welt-Ausstellung zu Paris. Erste Lieferung, Heft III. W. Braumüller, Wien, 199 p.

Ostwald W. (1884) Studien zur chemischen Dynamik III. Die Inversion des Rohrzuckers. J. Prakt. Chemie 29, 385-408. Continued in 30, 93-97, and in 31, 307-317, 1885.

Ostwald W. (1919) Physikalische Farbenlehre (Der Farbenlehre zweites Buch). Unesma, Leipzig, 259 p. A 2nd edition appeared in 1923, 290 p.

O'Sullivan C. (1872) On the transformation-products of starch. J. Chem Soc. 25, 579-588. More in 29, 478-482, 1876, 30, 125-144, 1876 and 35, 770-785, 1879.

O'Sullivan C. (1884) On the estimation of starch. J. Chem. Soc. Trans. 45, 1-10.

O´Sullivan C. and F.W. Tompson (1890) Invertase: a contribution to the history of an enzyme or unorganised ferment. J. Chem. Soc. Trans. 57, 834-931. More in 59, 46-51, 1891.

Otto J.G. (1885) Untersuchungen über die Blutkörperanzahl und den Hämoglobingehalt des Blutes. Pflüger's Arch. Physiol. 36, 12-36, 36-56, 57-72.

Oudemans A.C. (1878) Untersuchungen über das Chinamin. Arch. Néerl. 13, 356-388, more in Liebig's Ann. Chemie 197, 48-67, 1879.

Pack D.A. (1927) Ring density of sugar beet as a character for selection. Am. J. Botany 14, 238-245.

Paine H.S. and R.T. Balch (1925, 1927) Application of enzymes to beet sugar factory control. Ind. Eng. Chem. 17, 240-246. Clerget-invertase hydrolysis constants of sucrose and raffinose. J. Am. Chem. Soc. 49, 1019-1028.

Palache C. and C.H. Warren (1908) Kröhnkite, natrochalcite (a new mineral) and other sulphates from Chile. Am. J. Sci. 26, 342-348.

Panofsky W.K.H., A.E.S. Green and J.W.M. DuMond (1942) Precision determination of h/e by means of the short wave-length limit of the continuous x-ray spectrum at 20 keV. Phys. Rev. 62, 214-228.

Panzer T. (1906) Über das sogenannte Protagon der Niere. Zeitschr. Physiol. Chemie 48, 519-527. More by him on similar kidney studies is in 54, 239-254, 1907-08.

Parcus E. and B. Tollens (1890) Ueber die Mehr- oder Weniger-Drehung der Zuckerarten. Liebig's Ann. Chemie 257, 160-178.

Paris E.T. (1915) On the polarization of light scattered by spherical metal particles of dimensions comparable with the wavelength. Phil. Mag. 30, 459-481.

Parkin J. (1912) The carbohydrates of the foliage leaf of the snowdrop (Galanthus nivalis, L.) and their bearing on the first sugar of photosynthesis. Biochem. J. 6, 1-47.

Parratt L.G. (1932) Design of a double-crystal X-ray vacuum spectrometer. Phys. Rev. 41, 553-560. Results obtained are in the following paper, 561-576.

Parsons C.L. (1918) Iceland spar in Montana. Science 47, 508-509.

Partington J.R. (1952, 1953) An Advanced Treatise on Physical Chemistry. Vol. 3: The Properties of Solids, 639 p. Vol. 4: Physico-Chemical Optics. 688 p. Longmans, Green & Co., London. Many references. See also his Short History of Chemistry, 3rd ed. 1957.

Paschen F. (1901) Ueber das Strahlungsgesetz des schwarzen Körpers. Ann. Phys. 4, 277-298.

Paschen F. and H. Wanner (1899) Eine photometrische Methode zur Bestimmung der Exponentialconstanten der Emissionsfunction. Sitzungsber. Akad. Wiss. Berlin 1899(I), 5-11. Translation in Astrophys. J. 9, 300-307.

Paschen F. and E. Back (1912) Normale und anormale Zeemaneffekte. Ann. Phys. 39, 897-932, continued in 40, 960-970, 1913.

Pasquay P. (1777) Verzeichnis einer sehr schönen...Naturalien-Samlung aus den drey Reichen der Natur...Frankfurt am Main, 496 p.

Pasteur L. (1848, 1851, 1853c) Recherches sur les relations qui peuvent exister entre la forme cristalline, la composition chimique, et le sens du pouvoir rotatoire. Ann. Chim. 24, 442-459, 31, 67-102 and 38, 437-483. Extracts in C.R. 26, 28, 31 and 35. See also J.B. Biot in C.R. 27, 401-411. Very important discoveries on optical activity and molecular asymmetry.

Pasteur L. (1850) Recherches sur les propriétés spécifiques des deux acides qui composent l'acide racémique. Ann. Chim. 28, 56-99, abstr. in C.R. 29, 297-300, 1849.

Pasteur L. (1852) Mémoire sur les acides aspartique et malique. Ann. Chim. 34, 30-64. A Rapport on this work by J.B. Biot and others is in Mém. Acad. 23, 339-366, 1853.

Pasteur L. (1853a) Transformation des acides tartriques en acide racémique. Découverte de l´acide tartrique inactif. Nouvelle méthode de séparation de l´acide racémique en acides tartriques droit et gauche. Comptes Rendus Acad. Sci. Fr. 37, 162-166.

Pasteur L. (1853b) Recherches sur les alcaloïdes des quinquinas. Comptes Rendus Acad. Sci. Fr. 37, 110-114. See also his note on quinidine in 36, 26-27.

Pasteur L. (1856) Note sur le sucre de lait. Comptes Rendus Acad. Sci. Fr. 42, 347-351.

Pasteur L. (1858) Mémoire sur la fermentation de l´acide tartrique. Comptes Rendus Acad. Sci. Fr. 46, 615-618.

Pasteur L. (1860) Note relative au Penicillium glaucum et à la dissymmétrie moléculaire des produits organiques naturels. Comptes Rendus Acad. Sci. Fr. 51, 298-299.

Patein G. (1907) Unification des méthodes de dosage du lactose dans le lait. Ann. Chim. Anal. 12, 269-272.

Patein G. and E. Dufau (1899) De la nature du sucre urinaire des diabétiques. Comptes Rendus Acad. Sci. Fr. 128, 375-377.

Paul J.R. (1925) The optical activity of glucose as influenced by normal and diabetic urine. J. Clin. Investig. 1, 317-331.

Paulsen A. (1893) Naturkræfterne (The Forces of Nature), I, 2nd ed. P.G. Philipsens Forlag, Copenh., 853 p. Textbook for self-study, with a chapter on polarized light.

Pauthenier M. (1920) Les retards absolus dans le phénomène de Kerr. Comptes Rendus Acad. Sci. Fr. 170, 101-103. More 1576-1578 and in J. Phys. Radium 2, 183-196, 1921.

Pauthenier P. (1932) La biréfringence électrique des liquides isolants et son application au cinema sonore. Rev. Sci. 70, 737-744.

Payen A. and J. Persoz (1833) Mémoire sur la diastase, les principaux produits de ses réactions et leurs applications aux arts industriels. Ann. Chim. 53, 73-92.

Payen A. and J. Persoz (1834) Mémoire sur l'amidon (substance intérieure de la fécule) et suite de recherches sur la diastase. Ann. Chim. 56, 337-371. See also a paper by Payen in Mém. Sav. Étr. 8, 209-372, 1843.

Pearson W. (1822) On the doubly-refracting property of rock-crystal, considered as a principle of micrometrical measurements, when applied to the telescope. Mem. Astron. Soc. 1, 67-81. More 82-102, 103-108.

Pearson W. (1829) An Introduction to Practical Astronomy II. Longmans & Co., London, 708 p.

Peck A.B. (1919) Applications of the polarizing microscope in ceramics. J. Am. Ceramic Soc. 2, 695-707.

Péclet E. (1823) Cours de Physique. A. Ricard, Marseille, 538 p.

Peirce C.S. (1878) Photometric Researches. Ann. Harvard Coll. Astron. Observ. 9, 184 p.

Péligot E. (1880) Sur le saccharine. Comptes Rendus Acad. Sci. Fr. 90, 1141-1143.

Pellat H. (1896) Polarisation et Optique Cristalline. G. Carré, Paris, 285 p.

Pellat H. (1901) Mesure du pouvoir rotatoire du sucre. Sa variation avec la température et la longueur d'onde. Ann. Chim. 23, 289-316.

Pellet H. (1893) Dosage du sucre dans le betterave. Méthodes anciennes et nouvelles. Sélection des betteraves porte-graines. Bull. Soc. Chim. 9, 735-746.

Pellin P. (1889) Historique et Catalogue de tous les Instruments d'Optique Supérieure Appliqués aux Sciences et à l'Industrie. Paris, 189 p.

Pellin P. (1897) Appareil de projection des lames de roches, dans la lumière polarisée de M. Munier-Chalmas. C.R. Assoc. Fr. 18(1), 258-259.

Pellin P. (1899) Instruments d'Optique et de Précision, Ier & IIe Fasc., 44 p. IIIe Fasc. 32 p., IVe Fasc., 44 p., Ve Fasc., 35 p., VIIIe Fasc., 24 p. Parts of illustrated catalog.

Pellin P. (1903) Polarimètres et saccharimètres. J. Phys. 2, 436-442. Historical review.

Pellin P. & F. (1913) Instruments d'Optique et de Précision. VIIIe Fasc., 32 p., catalog.

Pelouze J. (1852) Sur une nouvelle matière sucrée extraite des baies de sorbier. Ann. Chim. 35, 222-235.

Pelouze J. and E. Fremy (1850) Cours de Chimie Générale, vol. 3. V. Masson, Paris, 950 p., with description of polarimetry of sugars on p. 337-360.

Pereira J. (1843, 1854) Lectures on Polarised Light, 110 p. and a greatly expanded second edition edited by B. Powell, 311 p. Longman, Brown and Green, London.

Perkin W.H. (1884) On the magnetic rotatory polarisation of compounds in relation to their chemical constitution. J. Chem. Soc. 45, 421-580. A German translation appeared in J. Prakt. Chem. 31 and 32, 1885.

Perkin W.H. (1896) On magnetic rotatory power, especially of aromatic compounds. J. Chem. Soc. 69, 1025-1257.

Perkin W.H. and B.F. Duppa (1861) On bibromosuccinic acid and the artificial production of tartaric acid. Quart. J. Chem. Soc. 13, 102-106.

Pernter M. (1901) Untersuchungen über die Polarisation des Lichtes in trüben Medien und des Himmelslichtes mit Rücksicht auf die Erklärung der blauen Farbe des Himmels. Denkschr. Akad. Wiss. Wien 73, 301-328.

Perrin F. (1925) Théorie de la fluorescence polarisée (Influence de la viscosité). Comptes Rendus Acad. Sci. Fr. 180, 581-583. See also J. Phys. Radium 7, 390-401, 1926.

Perrin F. (1929) La fluorescence des solutions. Ann. de Phys. 12, 169-275.

Peters J. (1894) Ein Halbschatten-Saccharimeter in neuer Form. Zeitschr. Ver. Rübenz.-Ind. 44 (Th. 2), 221-222.

Pfaff F. (1858) Untersuchungen über die Ausdehnung der Krystalle durch die Wärme. Ann. Phys. 104, 171-184, continued in 107, 148-154, 1859.

Pfaff F. (1861) Ueber die thermischen Verhältnisse der Krystalle. Ann. Phys. 113, 647-654.

Pfaff F. (1883) Versuche die absolute Härte der Mineralien zu bestimmen. Sitzungsber. Bayer. Akad. Wiss. 13, 55-68. Untersuchungen über die absolute Härte des Kalkspathes und Gypses und das Wesen der Härte, 372-400. He also describes a new instrument for hardness measurements in 14, 255-266, 1884.

Pfestorf G. (1926) Die Bestimmung der optischen Konstanten von Metallen im sichtbaren und ultravioletten Teil des Spektrums. Ann. Phys. 81, 906-928.

Pflüger A. (1898) Prüfung der Ketteler-Helmholtz'schen Dispersionsformeln an den optischen Constanten anomal dispergirender, fester Farbstoffe. Ann. Phys. 65, 173-213, 225-228.

Pflüger E. (1906) Eine neue Methode der Glykogenanalyse. Pflüger's Arch. Physiol. 114, 231-247. A simplified polarimetric method had already appeared in 103, 169-170, 1904, and improvements are presented in 129, 362-378, 1909.

Phillips R. (1803) Analysis of the schieferspath from Cornwall; to which is prefixed an analysis of carbonated lime, and remarks... Phil. Mag. 14, 289-292.

Pickering E.C. (1873-74) Applications of Fresnel's formula for the reflection of light. Proc. Am. Acad. 9, 1-30. Here as well as in Am. J. Sci. 7, 102-117, 1874, Pickering describes a polarimeter device.

Pickering E.C. (1879) Photometric observations. Ann. Harvard Coll. Astron. Observ. 11, Part I, 189 p., instruments described p. 1-8. See also Nature 21, 23-26.

Pickering E.C. (1882) The meridian photometer, Monthly Not. Royal Astron. Soc. 42, 365-367.

Pickering E.C. (1886) A new form of polarimeter. Proc. Am. Acad. 21, 294-302.

Pickering E.C. (1895) A new form of stellar photometer. Astrophys. J. 2, 89-96, 1895.

Pickering E.C., A. Searle and O.C. Wendell (1884) Observations with the Meridian Photometer. Ann. Harvard Coll. Astron. Observ. 14, Part I, 324 p. Pickering's photometer is described on p. 1-5. Detailed results were published e.g. in volumes 23, 24, 34, 44, 45, 46, 50 and 54 of these Annals during 1889-1908. See also Wendell 1909.

Pictet A. and A. Rotschy (1904) Synthese des Nicotins. Ber. Deutsch. Chem. Gesellsch. 37, 1225-1235. See also papers in Arch. Sci. Phys. Nat. 17, 401-422, and Arch. Pharmazie 244, 375-389, 1906.

Pictet A. and H. Vogel (1926) Synthèse du mélibiose. Helv. Chim. Acta 9, 806-809.

Pierre -. (1859) Das neue Nörremberg'sche Polarisationsinstrument. Sitzungsber. Gesellsch. Wissensch. Prag 1859, 13-14.

Piesse S. (1903) Chimie des Parfums. J.-B. Baillière et Fils, Paris, 380 p.

Piganiol P. (1947) Macromolécules. Matériaux de Synthèse I. Dunod, Paris, 275 p. Mentions polarized-light methods such as turbidimetry and flow birefringence.

Pighini G. (1910-11) Über die Bestimmung der enzymatischen Wirkung der Nuclease mittels optischer Methode. Zeitschr. Physiol. Chemie 70, 85-93.

Pike B. (1848, 1856) Illustrated Descriptive Catalogue of Optical, Mathematical and Philosophical Instruments I, New York, 282+58 p. 2nd edition, vols. I-II, 389+292+66 p.

Pionchon J. (1895) Sur une méthode optique d'étude des courants alternatifs. Comptes Rendus Acad. Sci. Fr. 120, 872-874.

Pirani M.v. (1910) Über die Messung der wahren Temperatur von Metallen. Verh. Deutsch. Phys. Gesellsch. 12, 301-348.

Pirsson L.V. and H.H. Robinson (1900) On the determination of minerals in thin rock-sections by their maximum birefringences. Am. J. Sci. 10, 260-265.

Pisani M. v. (1906) Über Dielektricitätsconstanten fester Körper. Zeitschr. Kristallogr. 41, 314-315, abstract of a dissertation. Includes Iceland spar.

Pitcher F.B. (1888) On the absorption spectra of certain blue solutions. Am. J. Sci. 36, 332-336.

Piutti A. (1886) Sur une nouvelle espèce d'asparagine. Comptes Rendus Acad. Sci. Fr. 103, 134-137, with a comment by L. Pasteur on p. 138.

Plaats B.J. v.d. (1915) Untersuchung über Absorption und Dispersion des Lichtes in Farbstofflösungen. Ann. Phys. 47, 429-462.

Planck M. (1900) Ueber irreversible Strahlungsvorgänge. Ann. Phys. 1, 69-122.

Planta A.v. and E. Schulze (1890) Ueber ein neues krystallisirbares Kohlenhydrat. Ber. Deutsch. Chem. Gesellsch. 23, 1692-1699. More in 24, 2705-2709, 1891.

Plücker J. (1839) Discussion de la forme générale des ondes lumineuses. Crelle J. Mathem. 39, 1-44, 91-92.

Plücker J. (1847) Ueber die Abstossung der optischen Axen der Krystalle durch die Pole der Magnete. Ann. Phys. 72, 315-343. Includes studies on calcite.

Plücker J. and A. Beer (1850) Ueber die magnetische Axen der Krystalle und ihre Beziehung zur Krystallform und zu den optischen Axen. Ann. Phys. 157, 115-162, with continuation in 82, 42-74, 1851.

Plyler E.K. (1929) The near infra-red absorption spectra of calcite and strontianite. Phys. Rev. 33, 948-951.

Pochettino A. (1905) Ulteriori richerche sulla luminesceza catodica nei cristalli. Nuovo Cimento 10, 395-406.

Pochettino A. (1911) Sui fenomeni di luminescenza catodica nei minerali. Nuovo Cimento 1, 21-64.

Pockels F. (1889) Ueber den Einfluss elastischer Deformationen, speciell einseitigen Drucks, auf das optische Verhalten krystallinischer Körper. Ann. Phys. 37, 144-172, 269-305, 372-388. More in 39, 440-469, 1890.

Pockels F. (1891) Ueber die Aenderungen des optischen Verhaltens und die elastischen Deformationen dielektrischer Krystalle im elektrischen Felde. N. Jahrb. Mineral. Beilageb. 7, 201-231. On the Pockels effect.

Pockels F. (1894) Ueber den Einfluss des elektrostatischen Feldes auf das optische Verhalten piëzoelektrischer Krystalle. Abh. Gesellsch. Wiss. Göttingen 39, 204 p.

Pockels F. (1899) Ein optisches Elektrometer für hohe Spannungen. Der Mechaniker 7, 29-31.

Pockels F. (1902) Über die Änderung des optischen Verhalten verschiedener Gläser durch elastische Deformationen. Ann. Phys. 7, 745-771 and 9, 220-223.

Pockels F. (1903) Über die Änderung der Lichtfortpflanzung in Kalkspat durch Deformationen. Ann. Phys. 11, 726-753.

Pockels F. (1906) Lehrbuch der Kristalloptik. B.G. Teubner, Leipzig/Berlin, 519 p.

Pocklington H.C. (1901) On rotatory polarization in biaxial crystals. Phil. Mag. 2, 361-370.

Pogány B. (1916) Über spezifischen Widerstand und optische Konstanten dünner Metallschichten. Ann. Phys. 49, 531-568.

Poggiale -. (1849) Dosage du sucre de lait au moyen du saccharimètre de M. Soleil, et détermination de la richesse du lait. C.R. Acad. Sci. Fr. 28, 584-585. See also an account in Cosmos 3, 375-379, 1853.

Pohl J.J. (1856) Ueber die Verwendbarkeit des Mitscherlich´schen Polarisations-Saccharimeters zu chemisch-technischen Proben. Sitzungsber. Akad. Wiss. Wien 21, 492-520.

Pohl J.J. (1861) Über die Verfälschung des Glycerins mit Zuckerlösungen und deren Ermittelung mittelst des polarisirten Lichtes. J. Prakt. Chemie 84, 169-173.

Pohl R. and P. Pringsheim (1914) Die Lichtelektrischen Erscheinungen. Fr. Vieweg & Sohn, Braunschweig, 114 p.

Poincaré H. (1889, 1892) Théorie Mathématique de la Lumière I-II. G. Carré, Paris, 408 + 310 p. Reprinted by J. Gabay 1995.

Poisson S.D. (1829) Mémoire sur l´équilibre et le mouvement des corps élastiques. Mém. Acad. Sci. 8, 357-570, 623-627. Extract in Ann. Chim. 37, 337-355, 1828. Large addition in J. École Polytechnique 13 (cah. 20), 1-174, 1831 (referred to by Verdet 1869 and Timoshenko 1953).

Poisson S.D. (1831) Mémoire sur la propagation du mouvement dans les milieux élastiques. Mém. Acad. Sci. 10, 549-605.

Poisson S.D. (1842) Mémoire sur l´équilibre et le mouvement des corps cristallisés. Mém. Acad. Sci. 18, 3-152. Extract or introduction in C.R. 9, 517-519, 1839. See also a paper on a similar topic by P.-H. Blanchet in Liouville J. Math. 5, 1-30, 1840.

Pokrowski G.I. (1912) Über die Lichtabsorption von Blättern einiger Bäume. Biochem. Zeitschr. 165, 420-426.

Pokrowsky S. (1912) Über das neue Bestimmungsverfahren scheinbarer Durchmesser der Sterne mittels elliptischer Polarisation des Lichtes. Astron. Nachr. 192, 23-28.

Pollard A.F.C. (1936) Polarization of light and some technical applications. Nature 138, 311-314.

Pope W.J. and S.J. Peachey (1899) Asymmetric optically active nitrogen compounds. J. Chem. Soc. Trans. 75, 1127-1131. Sur les nouveaux composés asymétriques de l´azote obtenus par synthèse et doués du pouvoir rotatoire. Comptes Rendus Acad. Sci. Fr. 129, 767-768.

Pope W.J. and A. Neville (1902) Asymmetric optically active selenium compounds and the sexavalency of selenium and sulphur. J. Chem. Soc. Trans. 81, 1552-1563.

Popovici M. (1889) Eine Methode zur quantitativen Bestimmung des Nicotins. Zeitschr. Physiol. Chemie 13, 445-449.

Porter A.B. (1907) Catalogue D, Optical Parts. The Scientific Shop (Albert B. Porter), Chicago, 48 p. Iceland spar preparations are on p. 36-38.

Posthumus J. and P. (1766) Catalogue de Curiosités Naturelles... Amsterdam, 116 p.

Potter R. (1857) On the principle of Nicol´s rhomb, and on some improved forms of rhombs for procuring beams of polarized light. Phil. Mag. 14, 452-457, more on composite prisms in 16, 419-421, 1858.

Pottevin H. (1901) Sur la constitution du gallotannin. Comptes Rendus Acad. Sci. Fr. 132, 704-706.

Pouillet C. (1847) Éléments de Physique Expérimentale et de Météorologie, vol. 2, 5th ed. Bechet Jeune, Paris, 836 p. See also the 7th ed., 1856.

Powell & Lealand (1841) Description of Messrs. Powell and Lealand's newly-constructed achromatic microscope. Microscopic J. 1, 177-181.

Powell B. (1830-31) Remarks on the alleged polarization of heat. Edinb. J. Sci. 3, 297-306. Further remarks… in 5, 206-209.

Powell B. (1835) An abstract of the essential principles of M. Cauchy´s view of the undulatory theory, leading to an explanation of the dispersion of light; with remarks. Phil. Mag. 6, 16-25, 107-113, 189-193, 262-267. More on these matters e.g. in 12, 1856.

Powell B. (1842) On apparatus for applying circular polarization to chemical inquiries. British Assoc. Report 12, pt. ii, 32. More in Phil. Mag. 22, 241-245, 1843 and Ann. Phys. 59, 640-641, 1843.

Powell B. (1843) Observations on certain cases of elliptic polarization of light by reflection. Phil. Trans. Royal Soc. 133, 35-44. More on metallic reflection in 135, 269-282, 1845.

Poynting J.H. (1880) On a simple form of saccharimeter. Phil. Mag. 10, 18-21.

Pozzi-Escot M.-E. (1900) Sur une nouvelle méthode d´analyse chimique: analyse quantitative microchimique. Rev. Phys. Chim. Appl. Ind. 4, 49-60.

Prazmowski A. (1873) Modification du saccharimètre optique. Comptes Rendus Acad. Sci. Fr. 76, 1212-1214. Half-shade device.

Predwoditileff A. and N. Netschajewa (1925) Zur Kinetik photochemischer Prozesse in Farbstoffen. Zeitschr. Phys. 32, 226-235.

Preston F.W. (1930) The use of polariscopes in the glass industry. J. Am. Ceramic Soc. 13, 595-623.

Preston T. (1895) The Theory of Light, 2nd ed. Macmillan & Co., London, 574 p.

Preston T. (1899) Radiation phenomena in the magnetic field. Nature 59, 224-229. More on p. 248 and 367, as well as 61, 11-13.

Prideaux E.B.R. (1915) General equations for the neutralisation of dibasic acids, and their use to calculate the acidity of dilute carbonate solutions. Proc. Royal Soc. A91, 535-543.

Priest I.G. (1913) Photometric device. U.S. patent no. 1,072,166, 3 p.

Priest I.G. (1918) A precision method for producing artificial daylight. Phys. Rev. 11, 502-504. Uses Nicol prisms and quartz plate.

Priest I.G. (1920) A new study of the leucoscope and its application to pyrometry. J. Opt. Soc. Am. 4, 448-495. See Brodhun.

Priest I.G. (1921) A method of obtaining radiant energy having the visible spectral distribution of a complete radiator at very high temperatures. J. Opt. Soc. Am. 5, 178-183.

Priest I.G. (1923) The colorimetry and photometry of daylight and incandescent illuminants by the method of rotatory dispersion. J. Opt. Soc. Am. 7, 1175-1209. See also Sci. Pap. Bur. Std. no. 443, 1922.

Priest I.G., K.S. Gibson and H.J. McNicholas (1920) An examination of the Munsell color system, I. Technol. Pap. Bur. Standards no. 167, 33 p.

Pring J.N. (1908) The formation of some carbides. J. Chem. Soc. Trans. 93, 2101-2108.

Pring J.N. and D.M. Fairlie (1912) The synthesis of hydrocarbons at high temperatures and pressures. J. Ind. Eng. Chem. 4, 812-818.

Pringsheim H. (1923) Die Polysaccharide, 2nd ed. J. Springer, Berlin, 234 p.

Pringsheim H. (1924) Über die Konstitution der Stärke, des Glykogens und der Flechtenstärke. Ber. Deutsch. Chem. Gesellsch. 57, 1581-1598.

Pringsheim H. (1925) Zuckerchemie. Akademische Verlagsgesellschaft, Leipzig, 322 p.

Pritchard A. (1836) Prices of optical instruments. Lists including polariscopes, polarizing prisms, tourmalines, crystal plates and polished calcareous spar. These lists, found at the Google Books website in 2014, possibly appeared in the Quarterly Literary Advertiser.

Provostaye F. de la and P. Desains (1849a) Mémoire sur la polarisation de la chaleur. Comptes Rendus Acad. Sci. Fr. 29, 121-125, 757-758.

Provostaye F. de la and P. Desains (1849b) Rotation du plan de polarisation de la chaleur produite par le magnétisme. Ann. Chim. 27, 232-236.

Provostaye F. de la and P. Desains (1850a) Mémoire sur la polarisation de la chaleur par réfraction simple. Ann. Chim. 30, 159-178.

Provostaye F. de la and P. Desains (1850b) Sur le pouvoir rotatoire qu'exercent sur la chaleur l'essence de térébenthine et les dissolutions sucrées. Ann. Chim. 30, 267-276. See also Comptes Rendus Acad. Sci. Fr. 31, 53-55 and 621-623.

Provostaye F. de la and P. Desains (1851) Mémoire sur la polarimétrie de la chaleur. Ann. Chim. 32, 112-127. Also Comptes Rendus Acad. Sci. Fr. 32, 86-90 and 33, 444-447.

Provostaye F. de la and P. Desains (1854) Note sur la détermination des pouvoirs émissifs des corps pour la lumière. Comptes Rendus Acad. Sci. Fr. 38, 977-978. Additional results are provided and discussed by P.D. in 61, 24-27, 1865.

Pulfrich C. (1881) Photometrische Untersuchungen über Absorption des Lichtes in isotropen und anisotropen Medien. Ann. Phys. 14, 177-218.

Pulfrich C. (1887) Ueber die Totalreflexion an doppeltbrechenden Krystallen. N. Jahrb. Mineral. Beilageb. 5, 167-194. See also papers by him in Ann. Phys. 30 and 31.

Pulfrich C. (1925) Über ein den Empfindungsstufen des Auges tunlichst angepasstes Photometer, Stufenphotometer genannt, und über seine Verwendung als Farbmesser, Trübungsmesser, Kolloidometer, Kolorimeter und Vergleichsmikroskop. Zeitschr. Instrumentenk. 45, 35-44, 61-70, 109-120 and (on color estimation) 521-530.

Purdie T. and J.W. Walker (1892) Resolution of lactic acid into its optically active constituents. J. Chem. Soc. 61, 754-765.

Purdie T. and W. Pitkeathly (1899) Production of optically active mono- and di-alkyloxysuccinic acids from malic and tartaric acids. J. Chem. Soc. Trans. 75, 153-161.

Purdie T. and J.C. Irvine (1903) The alkylation of sugars. J. Chem. Soc. Trans. 83, 1021-1037. More in 85, 1049-1070, 1904 and 87, 1022-1030, 1905.

Purdie T. and D.M. Paul (1907) The alkylation of d-fructose. J. Chem. Soc. Trans. 91, 289-299.

Purgold A. (1881) Ueber einige Kalkspath-Krystalle. Isis Abh. 1881, 59-61.

Putzeys P. and J. Brosteaux (1935) The scattering of light in protein solutions. Trans. Faraday Soc. 1935, 1314-1325.

Quarder B. (1927) Über Polarisation bei Stossleuchten. Zeitschr. Phys. 41, 674-687.

Quekett J. (1848) A Practical Treatise on the Use of the Microscope. H. Bailliere, London, 464 p. A second edition was published in 1852, 515 p.

Quincke G. (1862) Über die Lage der Schwingungen der Äthertheilchen in einem geradlig polarisirten Lichtstrahle. Sitzungsber. Akad. Wiss. Berlin 1862, 714-721, also in Ann. Phys. 118, 445-452. More in Ann. Phys. 146, 1872 and 149, 1873.

Quincke G. (1863) Ueber die optischen Eigenschaften der Metalle. Ann. Phys. 119, 368-388. Continued in 120, 599-605. More e.g. in 128, 355-399, 129, 207-218, 1866, 132, 561-592, 1867 and 142, 192-232, 1871.

Quincke G. (1883) Electrische Untersuchungen. Ann. Phys. 19, 705-782, mostly on the Kerr electro-optic effect from p. 729.

Quincke G. (1905) Ueber Eisbildung und Gletscherkorn. Ann. Phys. 18, 1-80.

Rabe P. (1910) Zur Kenntnis der Chinaalkaloide XII. Stereochemische Forschungen. Liebig's Ann. Chemie 373, 85-120.

Rabe P. and K. Kindler (1918) Über die partielle Synthese des Chinins. Ber. Deutsch. Chem. Gesellsch. 51, 466-467, one of more than 20 papers on the quinine group.

Raczkowski S. de (1896) Dosage des sucres dans les sucs de fruits, sirops, liqueurs, confitures et miels. Moniteur Scient. 47, 19-28.

Radicke F.W.G. (1839) Handbuch der Optik I-II. Nicolai, Berlin, 467 + 466 p.

Radicke G. (1840) Über Vervollkommung der Nicol´schen Polarisationsprismen. Ann. Phys. 126, 25-34.

Raehlmann E. (1874) Ueber Schwellenwerthe der verschiedenen Spectralfarben an verschiedenen Stellen der Netzhaut. Graefe's Arch. Ophthalmol. 20(I), 232-254. More in 21(II), 1875 and 22(I), 1876.

Raistrick H. and W. Young (1931) The estimation of mannitol in fermentation solutions. Phil. Trans. Royal Soc. B220, 173-220.

Raman C.V. (1922) On the molecular scattering of light in water and the colour of the sea. Proc. Royal Soc. A101, 64-80.

Raman C.V. (1928) A new radiation. Indian J. Phys. 2, 387-398. First paper on the Raman effect. Includes observations on the polarization of the scattered light, which distinguishes it from fluorescence.

Raman C.V. and K.S. Krishnan (1928) A new type of secondary radiation. Nature 121, 501-502. Additions by C.V.R. on p. 619.

Raman C.V. and K.S. Rao (1923) On the polarization of light scattered by gases and vapours. Phil. Mag. 46, 426-434.

Ramsauer C. (1921) Die lichtelektrische Wirkung unterteilter Lichtquanten. Ann. Phys. 64, 750-758.

Ramsay O.B. (1981) Stereochemistry. Heyden & Son Ltd., London, 256 p.

Ramsay W. (1888) Ueber die Absorption des Lichtes im Epidot vom Sulzbachthal. Zeitschr. Kristallogr. 13, 97-134.

Rankin G.A. (1916) Portland cement. J. Franklin Inst. 181, 747-784.

Rankin G.A. and F.E. Wright (1915) The ternary system $CaO\text{-}Al_2O_3\text{-}SiO_2$. Am. J. Sci. 39, 1-79. Preliminary results on Portland cement clinker appeared in J. Ind. Eng. Chem. 3, 211-227, 1911, and translations of both papers in Zeitschr. Anorg. Chemie.

Rankin G.A. and H.E. Merwin (1918) The ternary system $MgO\text{-}Al_2O_3\text{-}SiO_2$. Am. J. Sci. 45, 301-325.

Rankine A.O. and L. Silberstein (1920) Propagation of light in a gravitational field. Phil. Mag. 39, 586-591.

Rankine W.M. (1851, 1853) On the vibrations of plane-polarized light. Phil. Mag. 1, 442-447. A general view of an oscillatory theory of light. 6, 403-414.

Raoult F.-M. (1881) Sur les carbonates basiques de chaux. Comptes Rendus Acad. Sci. Fr. 92, 1457-1459.

Rasetti F. (1940) Scattering of thermal neutrons by crystals. Phys. Rev. 58, 321-325.

Rath G. v. (1860) Skizzen aus dem vulkanischen Gebiete des Niederrheins. Zeitschr. Deutsch. Geol. Gesellsch. 12, 29-47.

Rath G. v. (1867) Mineralogische Notizen. Ann. Phys. 132, 372-404, 517-550.

Rath G. v. (1868) Ueber den Tridymit, eine neue krystallisirte Modification der Kieselsäure. Ann. Phys. 135, 437-454.

Rathgen F. (1888) Ueber die Bestimmung des Rohrzuckergehaltes von Liqueuren, Conditorwaaren und Chocolade. Zeitschr. Anal. Chemie 27, 433-445.

Ratz F. (1905) Über Nicotin und dessen optisches Drehungsvermögen. Monatsh. Chemie 26, 1241-1252.

Rautenfeld F. v. (1923) Zur Elektrizitätsleitung in Kristallen. Ann. Phys. 72, 617-630.

Ray G.B., H.A. Blair and C.I. Thomas (1932) The spectrophotometric determination of certain blood pigments. J. Biol. Chem. 98, 63-83.

Rayleigh (1881a) On the electromagnetic theory of light. Phil. Mag. 12, 81-101.

Rayleigh (1881b) Experiments on colour. Nature 25, 64-66.

Rayleigh (1888) On the reflexion of light at the twin plane of a crystal. Phil. Mag. 26, 241-255, continued 256-265.

Rayleigh (1899) On the transmission of light through an atmosphere containing small particles in suspension, and the origin of the blue of the sky. Phil. Mag. 47, 375-384. An 1890 paper in Danish by L.V. Lorenz had solved this problem but went unnoticed.

Rayleigh (1901) On the stresses in solid bodies due to unequal heating, and on the double refraction resulting therefrom. Phil. Mag. 1, 168-178. See Neumann 1843.

Rayleigh (1902a,b) Is rotatory polarisation influenced by the Earth´s motion? Phil. Mag. 4, 215-220, using the quartz spectroscope of Tait 1880. Does motion through the aether cause double refraction? 678-683.

Rayleigh jr. (R.J. Strutt, 1918) The light scattered by gases: its polarisation and intensity. Proc. Royal Soc. A95, 155-176.

Rayleigh jr. (1919) Scattering of light by solid substances. Proc. Royal Soc. A95, 476-478. Includes Iceland spar.

Rayleigh jr. (1920) A re-examination of the light scattered by gases with respect to polarisation I. Experiments on the common gases. Proc. Royal Soc. A97, 435-450. Paper II on noble gases is in A98, 57-65, 1921. See also A94, 453-459, 1918.

Rayleigh jr. (1921) Double refraction and crystalline structure of silica glass. Proc. Royal Soc. A98, 284-295.

Rayleigh jr. (1922) Polarisation of light scattered by mercury vapour near the resonance periodicity. Proc. Royal Soc. A102, 190-196.

Rayman B. (1887) Sur l'isodulcite. Bull. Soc. Chim. 47, 668-677, more in 48, 632-637.

Reed J.O. (1898) Ueber den Einfluss der Temperatur auf die Brechung und Dispersion einiger Krystalle und Gläser. Ann. Phys. 65, 707-744.

Reese H.M. (1900) An investigation of the Zeeman effect. Astrophys. J. 12, 120-135.

Regener E. (1906) Über die chemische Wirkung kurzwelliger Strahlung auf gasförmige Körper. Ann. Phys. 20, 1033-1046.

Reichert E.T. and A.P. Brown (1909) The Differentiation and Specificity of Corresponding Proteins and other Vital Substances in Relation to Biological Classification and Organic Evolution. The Crystallography of Hemoglobins. Carnegie Inst. Publ. no. 116, 338 p. and 100 plates. Washington, D.C.

Reiger R. (1910) Über optische und mechanische Relaxationszeit. Ann. Phys. 31, 93-97.

Reinsch H. (1881) Ueber die Erkennung und Unterscheidung der Kiesel-, Thon- und Beryllerde, der Borsäure, der Alkalien und einiger Metalle durch das Mikroskop. Ber. Deutsch. Chem. Gesellsch. 14, 2325-2331.

Renninger M. (1955) Messungen zur Röntgenstrahl-Optik des Idealkristalls. I. Bestätigung der Darwin-Ewald-Prins-Kohler Kurve. Acta Crystallogr. 8, 597-606.

Reusch E. (1866-67) On the effect of pressure upon rock salt and Iceland spar. Proc. Royal Soc. Edinb. 6, 134-139.

Reusch E. (1867) Über eine besondere Gattung von Durchgängen im Steinsalz und Kalkspath. Ann. Phys. 132, 441-451, also in Monatsber. Akad. Wiss. Berlin 1867, 220-227. See also Weitere Bemerkungen… in Ann. Phys. 147, 307-311, 1872. These describe artificial twinning in Iceland spar.

Reusch E. (1870) Untersuchungen über Glimmerkombinationen. Ann. Phys. 138, 628-638. More e.g. in a paper by L. Sohncke in Ergänzungsband 8, 16-64, 1876.

Riban J. (1875) Des carbures terebeniques et de leurs isoméries. Ann. Chim. 6, 5-52, 215-263, 353-391, 473-493.

Ribaud G. (1919) Contribution à l'étude de l'absorption de la lumière par les gaz. Ann. de Phys. 12, 107-226.

Ribaud G. (1931) Traité de Pyrométrie Optique. Revue d'Optique, Paris, 485 p.

Richards & Co. Ltd. (1896) Illustrated Catalogue of Chemical and Physical Apparatus and Assay Goods. New York and Chicago, 298 p.

Richards T.W. (1902) A redetermination of the atomic weight of calcium – preliminary paper. J. Am. Chem. Soc. 24, 374-377. More in 32, 1577-1590, 1910.

Richardson F.W. and A. Jaffé (1907) Dosage du saccharose, du lactose, etc., dans le lait. Moniteur Scient. 66, 423-426, translated from J. Soc. Chem. Industry 23.

Richardson S.W. (1915) Some experiments on the properties of dielectrics. Proc. Royal Soc. A92, 41-57. More on electrical resistivity p. 101-107.

Richtmyer F.K., S.W. Barnes and E. Ramberg (1934) The widths of the L-series lines and of the energy levels of Au(79). Phys. Rev. 46, 843-860.

Ricketts P. de P. (1879) A method for the detection of artificial or dextro-glucose in cane sugar, and the exact determination of cane sugar by the polariscope. J. Am. Chem. Soc. 1, 2-6.

Riddell W.P. (1853) On Soleil's saccharimeter. Am. J. Sci. 15, 175-186.

Righi A. (1883) Sur les changements de longueur d'onde obtenus par la rotation d'un polariseur, et sur le phénomène des battements produits avec les vibrations lumineuses. J. Phys. 2, 437-446. Extracted from Mem. Accad. Sci. Bologna 3, 1881.

Righi A. (1885) Recherches expérimentales et théoriques sur la lumière polarisée, réfléchie par le pole d'un aimant. Ann. Chim. 4, 433-515. More in 9, 65-144, 1886.

Righi A. (1886) Studi sulla polarizzazione rotatoria magnetica. Mem. R. Accad. Sci. Ist. Bologna 7, 443-547.

Righi A. (1887) Recherches expérimentales sur la lumière polarisée réflèchie par la surface équatoriale d'un aimant. Ann. Chim. 10, 200-223.

Righi A. (1894) Sulle oscillazioni elettriche a piccola lunghezza d'onda e sul loro impiego nella produzione di fenomeni analoghi ai principali fenomeni dell'ottica. Mem. R. Accad. Sci. Ist. Bologna 4, 487-590.

Rignoux G. (1914) Dispositif pour la vision à distance. Comptes Rendus Acad. Sci. Fr. 159, 301-304. See R. Arapu in Scientific American Supplement no. 2055, 1915.

Riiber C.N. and J. Minsaas (1926) Eine dritte Modifikation der Galaktose (VII. Mitteilung über Mutarotation). Ber. Deutsch. Chem. Gesellsch. 59, 2266-2281.

Rinne F. (1903) Beitrag zur Kenntniss der Umformung von Kalkspathkrystallen und von Marmor unter allseitigem Druck. N. Jahrb. Mineral. 1903(1), 160-178.

Rinne F. (1914) Die Kristallwinkelveränderung verwandter Stoffe beim Wechsel der Temperatur. Centralbl. Mineral. 1914, 705-718.

Rinne F. (1922a) Einführung in die Kristallographische Formenlehre, 4th-5th edition. Max Jänecke, Leipzig, 254 p.

Rinne F. (1922b) Das feinbauliche Wesen der Materie nach dem Vorbilde der Kristalle, 2nd-3rd ed. Gebr. Borntraeger, Berlin, 168 p. English translation published 1924.

Rinne F. (1928) Kristallographisches zum Kalkbrennen. In: Victor Goldschmidt Festschrift, ed. H. Himmel, 213-220. Portheim Stiftung, Heidelberg.

Rinne-Berek (1953) Anleitung zu Optischen Untersuchungen mit dem Polarisationsmikroskop, 2nd ed. Schweizerbart, Stuttgart, 366 p.

Rinner K. and Benz F. (1966) In: Handbuch der Vermessungskunde, 10th ed., Band VI, p. 172-404. J.B. Metzler Verlag, Stuttgart. Includes description of the use of Kerr cells in geodesy.

Ritter J.W. (1803) Versuche über das Sonnenlicht. Ann. Phys. 12, 409-415. First paper on ultraviolet rays in sunlight, preceded by a short note in 7, 527, 1801.

Robert E. (2007) Saga Íslandsferdanna i Gaimard-leidangrinum 1835 og 1836 (Reports of French expeditions to Iceland 1835-36), transl. G. Gudmundsdóttir. Reykjavik, 186 p.

Roberts A.W. (1906) On a method of determining the absolute dimensions of an Algol variable star. Monthly Not. Royal Astron. Soc. 66, 123-141.

Robinson J.R. (1939) The anomalous viscosity of dilute suspensions of rigid anisometric particles. Proc. Royal Soc. A170, 519-550.

Robiquet E. (1856) Description du diabétomètre. Appareil destiné à doser le sucre dans les urines diabétiques. J. Pharm. 29, 371-374, with instructions in 30, 277-281. Extract in Comptes Rendus Acad. Sci. Fr. 43, 920-921. The instrument is illustrated in an article by C. Bernard in Rev. Sci. 2, 970-977, 1873.

Robison R. (1922) A new phosphoric ester produced by the action of yeast juice on hexoses. Biochem. J. 16, 809-824.

Rochon A. (1777) Deux instruments destinés à mesurer les angles, ou plutôt les distances angulaires… Histoire de l´Académie Royale des Sciences, 64-68 (published in 1780).

Rochon A. (1783) Recueil de Mémoires sur la Mécanique et la Physique. Barrois, Paris, 384 + xxxii p.

Rochon A. (1811) Expériences sur la formation de la double image, et sur sa disparition dans le spath d´Islande et dans le cristal de roche, appliquées au perfectionnement de tous les micromètres composés de ces deux substances. J. Phys. 72, 319-332.

Rochon A. (1812) Nouvelles recherches sur les micromètres destinés à la mesure du diamètre du Soleil et description et usage d´un micromètre de cristal de roche appliqué à des opérations de tactique navale. J. Mines 31, 281-308, cf. Torelli de Narci 1803.

Rocques X. (1900) Dosage optique dans les vins. Ann. Chim. Anal. 5, 182-186, 216-219.

Rolfe G.W. (1905) The Polariscope in the Chemical Laboratory. Macmillan Co., New York, 320 p. On the use of polarimeters in sugar research and in related industries.

Rollett A. (1862) Versuche und Beobachtungen am Blute. Sitzungsber. Akad. Wiss. Wien 46(2), 65-98, with krystallographical and optical observations by V.v. Lang p. 84-91.

Rollett A. (1881) Ueber ein Polarispectromikroskop, mit Bemerkungen über das Spectrumocular. Zeitschr. Instrumentenk. 1, 366-372. Improved by E. Abbe, see J. Royal Microsc. Soc. 3, 435-436, 1883.

Rollett A. (1891) Untersuchungen über Contraction und Doppelbrechung der quergestreiften Muskelfasern. Denkschr. Akad. Wiss. Wien 58, 41-98, with color plates.

Romé Delisle J.B.L. de (1772) Essai de Cristallographie, ou Description des Figures Géométriques… Didot, Paris, xxxii + 427 p.

Romé Delisle J.B.L. de (1783) Cristallographie ou Description des Formes Propres à tous le Corps du Regne Minéral…, 2nd ed., 4 vols. Paris.

Romich -. and J. Nowak (1874) Experimentaluntersuchung dielektrischer Körper in Bezug auf ihre dielektrische Nachwirkung. Sitzungsber. Akad. Wiss. Wien 70(2), 380-407. Includes calcite. See book by Liebisch.

Röntgen W.C. (1880) Ueber die von Herrn Kerr gefundene neue Beziehung zwischen Licht und Elektricität. Ann. Phys. 10, 77-92.

Röntgen W.C. (1883) Ueber die durch elektrische Kräfte erzeugte Änderungen der Doppelbrechung des Quarzes. Ann. Phys. 18, 213-228, 534-551. This effect was later named after F. Pockels. A comment on similar work by A. Kundt is in 19, 319-322.

Röntgen W.C. (1892) Kurze Mittheilung von Versuchen über den Einfluss des Druckes auf einige physikalische Erscheinungen. Ann. Phys. 45, 98-107. Includes studies on the inversion of sucrose, continued by O. Stern in 59, 652-663, 1896.

Röntgen W.C. (1896) On a new kind of rays. Nature 53, 274-276, translation of papers in Sitzungsber. Würzb. Phys. Med. Gesellsch. 1895, 132-141 and 1896, 11-19.

Röntgen W.C. (1907) Über die Leitung der Elektrizität in Kalkspat und über den Einfluss der X-Strahlen darauf. Sitzungsber. Bayer. Akad. Wiss. 1907, 113-114. These investigations were continued by Joffé 1923.

Rood O.N. (1881) Students' Text-Book of Color, or, Modern Chromatics. D. Appleton & Co., New York, 329 p.

Root E. (1876) Zur Kenntniss der dielektrischen Polarisation. Ann. Phys. 158, 1-35, 425-461. See also Rowland and Nichols 1881.

Rosanoff M.A. (1906) On the principle of optical superposition. J. Am. Chem. Soc. 28, 525-533. Continued in 29, 536-539, 1907.

Rose E. (1863) Ueber die Hallucinationen im Santonrausch. Virchow's Arch. Pathol. Anat. 28, 30-82.

Rose E. (1865) Die Farbenkrankheiten im Abriss. Ann. Phys. 126, 68-87.

Rose G. (1837) Ueber die Bildung des Kalkspaths und Arragonits. Ann. Phys. 42, 353-367. Also, much later: Ueber die heteromorphen Zustände der kohlensauren Kalkerde, Zeitschr. Deutsch. Geol. Gesellsch. 8, 543-552, 1856.

Rose G. (1864) Eilhardt Mitscherlich. Gedächtnissrede. Zeitschr. Deutsch. Geol. Gesellsch. 16, 21-72. More historical details: Ueber die Entdeckung der Isomorphie, 20, 621-630, 1868.

Rose G. (1868) Über die in Kalkspath vorkommenden hohlen Kanäle. Abh. Akad. Wiss. Berlin 1868, Phys. Kl., 57-79. See also K.E.F. Schmidt's paper in Ann. Phys. 33, 534-548, 1888 on optical phenomena (first noted by D. Brewster in 1844) due to these tubes.

Rose W.J. (1909) A system of standard solutions. Chem. Eng. 10, 204-206. Uses Iceland spar as raw material.

Rosén P.G. (1870) Studien und Messungen an einem Zöllnerschen Astro-Photometer. Bull. Acad. Impér. Sci. St.-Pétersb. 14, 95-124.

Rosenberg H. (1921a) Photometrische Messungen der Mondoberfläche und das Flächenphotometer der Sternwarte Österberg. Astron. Nachr. 214, 137-146.

Rosenberg H. (1921b) Sternphotometrie mit Photozelle und Verstärkerröhren. Naturwissensch. 9, 359-365. See also his paper on photocell fatigue in Zeitschr. Phys. 7, 18-64.

Rosenberg K. (1924) Experimentierbuch für den Unterricht in der Naturlehre, vol. 2, 4th edition. Hölder-Pichler-Tempsky A.G., Wien, 629 p.

Rosenbusch H. (1876) Ein neues Mikroskop für mineralogische und petrographische Untersuchungen. N. Jahrb. Mineral. 1876, 504-513.

Rosenbusch H. (1873, 1877) Mikroskopische Physiographie der Mineralien und Gesteine. Band I: Mineralien, Band II: Massige Gesteine. E. Schweizerbart, Stuttgart, 398 + 596 p.

Rosenbusch H. (1885, 1892, 1904, 1924) Mikroskopische Physiographie der Petrographisch Wichtigen Mineralien. 3rd ed., 712 p. 4th ed. revised by E.A. Wülfing, pt. 1, 467 p. 5th ed., vol. I, pt. 1, 846 p. E. Schweizerbart, Stuttgart.

Rosenfeld L. (1928) Quantenmechanische Theorie der natürlichen optischen Aktivität von Flüssigkeiten und Gasen. Zeitschr. Phys. 52, 161-174.

Rosenheim O. (1914, 1916) The galactosides of the brain II-III. Biochem. J. 8, 110-120, 121-127 and 10, 142-159.

Rosenheim O. and M. C. Tebb (1908) The optical activity of so-called "protagon". J. Physiol. 37, 341-347, continued 348-354 and in J. Exper. Physiol. 1, 297-304.

Rosmorduc J. (1977) Ampère et l'optique: une intervention dans le débat sur la transversalité de la vibration lumineuse. Revue Hist. Sciences 30, 159-167.

Ross A. (1843) Ross's improved achromatic compound and simple microscope. London Physiol. J. 1, 91-94.

Ross D.W. (1919) Silica Refractories. Bureau of Standards Technol. Paper 116, 84 p.

Ross P.A. (1923) Change in wave-length by scattering. Proc. Nat. Acad. Sci. 9, 246-248.

Ross P.A. and P. Kirkpatrick (1934) Effect of electron binding upon the magnitude of the Compton shift. Phys. Rev. 46, 668-673.

Rossi A.G. (1913) Esperienze sulla pressione della luce. Nuovo Cimento 6, 145-163.

Roudolf W. (1852) Bestimmung der Leuchtkraft verschiedener Beleuchtungsmaterialien. Dingler's Polyt. J. 25, 271-283.

Rouget C. (1862) Sur les phénomènes de polarisation qui s'observent dans quelques tissus des végétaux et des animaux et en particulier dans le tissu musculaire. J. Physiol. 5, 247-271.

Rousset H. (1907) Emploi des tubes normaux pour le dosage polarimétrique du saccharose. Ann. Chim. Anal. 12, 468-470.

Rowland H. A. and W.W. Jacques (1879) On the diamagnetic constants of bismuth and calc-spar in absolute measure. Am. J. Sci. 18, 360-368, 368-371.

Rowland H.A. and E.L. Nichols (1881) Electric absorption of crystals. Phil. Mag. 11, 414-419. Note: Richardson 1915 obtained different results.

Rubens H. (1911) Über langwellige Reststrahlen des Kalkspats. Verh. Deutsch. Phys. Gesellsch. 13, 102-110.

Rubenson R. (1864) Mémoire sur la polarisation de la lumière atmosphérique. Nova Acta Reg. Soc. Sci. Upsal. 5(1), 1-145 and i-xcii. See also an article by T.R. Thalén in Öfvers. Kungl. Sv. Akad. 19, 29-56, 1862.

Rubinowicz A. (1918) Bohrsche Frequenzbedingung und Erhaltung des Impulsmomentes. II. Teil. Phys. Zeitschr. 19, 465-474.

Rubinowicz A. (1921) Zur Polarisation der Bohrschen Strahlung. Zeitschr. Phys. 4, 343-346.

Rudberg F. (1828) Untersuchungen über die Brechung des farbigen Lichts im Bergkrystall und Kalkspath. Ann. Phys. 14, 45-57.

Rudberg F. (1829) Untersuchung über die Brechung des farbigen Lichts im Arragonit und im farblosen Topase. Ann. Phys. 17, 1-29.

Rudberg F. (1831) Sur la refraction des rayons différemment colorés dans les cristaux à un et deux axes optiques. Ann. Chim. 48, 225-268. Also Phil. Mag. 1, 1- 9, 137-147, 409-417, 1832 (with comments by D. Brewster).

Ruff O. (1898) Ueber die Verwandlung der d-Gluconsäure in d-Arabinose. Ber. Deutsch. Chem. Gesellsch. 31, 1573-1577.

Ruff O. (1901) Ueber die Oxydation der l-Arabonsäure und l-Xylonsäure. Ber. Deutsch. Chem. Gesellsch. 34, 1362-1372.

Ruff O. (1910) Über einen elektrischen Vakuumofen. Ber. Deutsch. Chem. Gesellsch. 43, 1564-1574.

Ruff O. and P. Schmidt (1921) Die Dampfdrucke der Oxyde des Siliciums, Aluminiums, Calciums und Magnesiums. Zeitschr. Anorg. Chemie 117, 172-190.

Runge C. (1888) On the harmonic series in the spectra of the elements. British Assoc. Report 58, 576-577. See also the papers by Kayser and Runge (1888 and later).

Runge C. and F. Paschen (1902) On the radiation of mercury in the magnetic field. Astrophys. J. 15, 235-251 and sequels e.g. On the separation of corresponding series lines in the magnetic field. 16, 123-134.

Rupp E. (1928) Eine neue Anordnung zum Nachweis der Teilfrequenzen bei Lichtwellen periodisch schwankender Intensität. Zeitschr. Phys. 47, 72-88.

Rutley F. (1879a) Study of Rocks. Longmans, Green & Co., London, 319 p.

Rutley F. (1879b) An English microscope for the use of students of mineralogy and petrology. Nature 20, 13-14.

Rydberg J.R. (1890) Recherches sur la constitution des spectres d'émission des éléments chimiques. Kungl. Svenska Vetenskaps-Akad. Handl. 23(11), 155 p. Extract in Comptes Rendus Acad. Sci. Fr. 110, 394-397. See also various subsequent papers by W. Ritz, e.g. in Ann. Phys.12, 264-310, 1903.

Sabatier P. (1887) Spectres d'absorption des chromates alcalins et de l'acide chromique. Ann. Fac. Sci. Toulouse 1(1), 11 p.

Sadron C. (1936) Sur la biréfringence dynamique des liquides purs. J. Phys. Rad. 7, 263-269.

Sagnac G. (1904) Vérifications experimentales des lois de la propagation anomale de la lumière le long l'axe d'un instrument d'optique. Comptes Rendus Acad. Sci. Fr. 138, 619-621, continued 678-680. Experiment with Iceland spar lenses.

Sagnac G. (1911) Strioscope et striographe interférentiels. Le Radium 8, 241-253.

Sagnac G. (1913) L´éther lumineux démontré par l´effet du vent relatif d´éther dans un interféromètre en rotation uniforme. Comptes Rendus Acad. Sci. Fr. 157, 708-710, continuation 1410-1413. More in J. Phys. 4, 177-195, 1914.

Saillard É. (1913) Betterave et Sucrerie de Betteraves, 2nd ed., from the handbook series Encyclopédie Agricole, edited by G. Wery. J.-B. Baillière et Fils, Paris, 618 p.

Saint-Martin L.-G. (1900) Nouvelles recherches sur le pouvoir absorbant de l'hémoglobine pour l'oxygène et l'oxyde de carbone. Comptes Rendus Acad. Sci. Fr. 131, 506-509.

Saint-Venant B. de (1872) Sur les diverses manières de présenter la théorie des ondes lumineuses. Ann. Chim. 25, 335-381.

Salet P. (1910) Sur l'étude de la polarisation en astronomie, Ann. Observ. Paris 27, C1-C59, extract in Le Radium 8, 156-158, 1911. The part describing his observations during a 1905 eclipse is in: Sur la polarisation de la couronne solaire. Bull. Soc. Astr. Fr. 23, 287-291, 1909.

Salkowski E. (1889) Ueber Zuckerbildung und andere Fermentationen in der Hefe. I. Zeitschr. Physiol. Chemie 13, 506-538.

Salkowski E. (1894) Ueber die Kohlehydrate der Hefe. Ber. Deutsch. Chem. Gesellsch. 27, 497-502, 3325-3329.

Salomon F. (1883) Die Stärke und ihre Verwandlungen unter dem Einfluss anorganischer und organischer Säuren. J. Prakt. Chemie 28, 82-154.

Salomons D. L. (1893) A new form of portable photometer. J. Inst. Electr. Engineers 22, 197-214. Employs Nicol prisms.

Salomonson J.K.A.W. (1919) A new ophthalmoscope. Proc. Kon. Akad. Wet. 21, 937-940. More in Trans. Opt. Soc. 22, 53-62, 1921.

Salomonson J.K.A.W. and G.J. Schoute (1904) Über den Zusammenhang zwischen dem Reizungsgesetze und dem Gesetze Weber-Fechner's. Pflüger's Arch. Physiol. 105, 389-424.

Sang E. (1872-75) Notice of a singular property exhibited by the fluid enclosed in crystal cavities. Proc. Royal Soc. Edinb. 8, 87-88. Further discussion by J. Hunter and E. S. 126-130, and by P.G. Tait and W. Swan 247-254.

Sang E. (1891) Investigation of the action of Nicol´s polarising eye-piece. A paper read in 1837(!) but published in Proc. Royal Soc. Edinb. 18, 323-336, 1890-91, along with a Note on Dr. Sang´s paper by P.G. Tait, 337-340.

Sansoni F. (1885) Ueber die Kristallformen des Andreasberger Kalkspath. Zeitschr. Kristallogr. 10, 545-560.

Santon L. (1928) Sur les mesures photomètriques par disparition de franges. Revue d'Optique 7, 487-494. Uses a Savart plate from Iceland spar.

Sarasin E. (1882) Indices de réfraction ordinaire et extraordinaire du spath d´Islande, pour les rayons de diverses longueurs d´onde jusqu´à l´extrême ultraviolet. Comptes Rendus Acad. Sci. Fr. 95, 680-682, also in Arch. Sci. Phys. Nat. 8, 392-394.

E.H. Sargent & Co. (1910) Price List of Chemical and Bacteriological Apparatus and Assayers' Supplies. Chicago, 333 p.

Sauer H. (1934) Polarization photometer. U.S. patent no. 1,959,549, 3 p.

Sauvage -. de (1746) Mémoire contenant des observations de lithologie, pour servir à l'histoire naturelle du Languedoc, & à la théorie de la Terre. Histoire de l'Académie Royale des Sciences, 713-758 (published in 1751).

Savart F. (1829) Recherches sur l´élasticité des corps qui cristallisent régulièrement. Ann. Chim. 40, 5-30, 113-137. Abbreviated translation in Ann. Phys. 16, 206-248.

[Savart F.] (1840) Untitled footnote on Savart's plate by J. Poggendorff in his Ann. Phys. 125, 292.

Saxer A.H. (1914) The nature and the velocity of migration of the positive ions in flames. Phys. Rev. 3, 325-338.

Sayhun M. (ed., 1944) Outline of the Amino Acids and Proteins. Reinhold Publ. Co., New York, 251 p.

Schaefer C. and M. Schubert (1916) Kurzwellige ultrarote Eigenfrequenzen der Sulfate und Karbonate. Ann. Phys. 50, 283-338. See also a paper by C.S.: Die Eigenschwingungen der Kristalle. Fortschr. Mineral. Kristallogr. Petrogr. 9, 31-66, 1924.

Schaefer C. and F. Matossi (1930) Das Ultrarote Spektrum. J. Springer, 400 p.

Schaefer C., C. Bormuth and F. Matossi (1926) Das ultrarote Absorptionsspektrum der Carbonate. Zeitschr. Phys. 39, 648-659.

Schaefer C., F. Matossi and F. Dane (1927) Über die Kristallstruktur der Carbonate und Nitrate. Zeitschr. Phys. 45, 493-500.

Schaefer C., F. Matossi and H. Aderhold (1930a,b) Untersuchungen über den Ramaneffekt an Kristallen. Zeitschr. Phys. 65, 289-318. Die Polarisation der Ramanstrahlung in Kristallen, 319-329.

Schaik W.C.L. van (1882) Recherches concernant la dispersion électromagnétique sur un spectre de grande étendue. Arch. Néerl. 17, 373-390. More in 18 and 21.

Schardinger F. (1890) Über eine neue optisch active Modification der Milchsäure, durch bacterielle Spaltung des Rohrzuckers erhalten. Monatsh. Chemie 11, 545-559.

Scharff F. (1870) Über den Einfluss des Zwillingsbaues auf die Gestaltung der Krystalle des Kalkspaths. N. Jahrb. Mineral. 1870, 542-558.

Schaum K. (1924) Photometrische und spektralphotometrische Studien. Zeitschr. Wissensch. Photogr. 22, 148-162. More in 23, 52-61, 1925.

Scheffer W. (1919) Ein neues Universalmikroskop. Zeitschr. Wissensch. Mikrosk. 36, 1-16. With possibility of studying polished sections of ore minerals in reflected light.

Scheibler C. (1870) Ueber das von mir verbesserte Soleil'sche Polarisations-Instrument. Zeitschr. Ver. Rübenz.-Industrie 20, 609-615.

Scheibler C. (1873) Ueber das Vorkommen der Arabinsäure (Gummi) in den Zuckerrüben und über den Arabinzucker (Gummizucker). Ber. Deutsch. Chem. Gesellsch. 6, 612-622.

Scheibler C. (1880) Ueber das Saccharin und die Saccharinsäure. Ber. Deutsch. Chem. Gesellsch. 13, 2212-2217.

Scheibler C. (1885) Ueber die Zusammensetzung und einige Eigenschaften der Raffinose. Ber. Deutsch. Chem. Gesellsch. 18, 1779-1786. More in 19, 2868-2874, 1886.

Scheibler C. and H. Mittelmeier (1889) Ueber die Inversionsproducte der Melitriose. Ber. Deutsch. Chem. Gesellsch. 22, 1676-1686. More 3118-3124 and in 23, 1438-1443, 1890.

Schein M. (1928) Über die Feinstruktur und den Zeemaneffekt der Quecksilber-resonanzlinie. Ann. Phys. 85, 257-312.

Schenck R. (1899) Untersuchungen über die krystallinischen Flüssigkeiten. III. Zeitschr. Physikal. Chemie 28, 280-288. More in 29, 546-557.

Schenck R. (1905) Kristallinische Flüssigkeiten und Flüssige Kristalle. W. Engelmann, Leipzig, 159 p.

Schepelern H.D. (1965-68) Breve til og fra Ole Worm, Bd. I-III. Munksgaard, Copenhagen. Correspondence of Ole Worm who was related to the Bartholin family.

Schepelern H.D. (1971) Museum Wormianum. Dets Forudsætninger og Tilblivelse. Wormianum, Copenhagen, 434 p. On Worm´s collection of minerals etc.

Schertz F.M. (1923) The quantitative determination of carotin by means of the spectrophotometer and the colorimeter. J. Agric. Res. 26, 383-390. More on xanthophyll in 30, 253-260, 1925.

Schiebold E. (1919) Die Verwendung der Lauediagramme zur Bestimmung der Struktur des Kalkspates. Abh. Math.-Phys. Kl. Sächs. Akad. Wiss. 36(II), 67-213.

Schiller J. (1906) Optische Untersuchungen von Bastfasern und Holzelementen. Sitzungsber. Akad. Wiss. Wien 115(1), 1623-1659.

Schimmel & Cie (1893) Geschäftsbericht, abstracted in Zeitschr. Anal. Chemie 32, 490-495. The company issued such reports on the composition of plant oils for decades.

Schincaglia I. (1899) Richerce sperimentali sulla luce fluorescente nei solidi. Nuovo Cimento 10, 212-223, plus a short note in 11, 299, 1900.

Schirmann M.A. (1919) Dispersion und Polychroismus des polarisirten Lichtes, das von Einzelteilchen von der Grössenordnung der Wellenlänge des Lichtes abgebeugt wird. Ann. Phys. 59, 493-537.

Schirmann M.A. (1926) Nephelometrie. In: Handbuch der Biologischen Arbeitsmethoden (ed. E. Abderhalden), Abt. II, Teil 2, Heft 4, 1345-1536. Urban & Schwarzenberg, Berlin.

Schirmer W. (1912) Beiträge zur chemischen Kenntnis der Gummi- und Schleimarten. Arch. Pharmazie 250, 230-251.

Schliemann W. (1911) Über die Cellobiose und die Acetolyse der Cellulose. Liebig’s Ann. Chemie 378, 366-381.

Schlossmacher K. (1924) Die Wege zum Quantitativen in der Erzmikroskopie. Fortschr. Mineral. Kristallogr. Petrogr. 9, 161-184.

Schlubach H.H. and K. Moog (1923) Über die Spaltung des methylierten Milchzuckers. Ber. Deutsch. Chem. Gesellsch. 56, 1957-1963.

Schmid E. (1842) Versuch einer inductorischen Entwicklung der Undulationstheorie. Ann. Phys. 56, 393-406, 541-557.

Schmidt E. (1918) L’éphedrine et les éphédrines. Moniteur Scient. 85, 151-160, 197-206.

Schmidt F. and H. Haensch (1893) Neuer Helmholtz’scher Farbenmischapparat. Zeitschr. Instrumentenk. 13, 200-204. See also a paper by R. Schelske in Ann. Phys. 16, 349-358, 1882 and Handbuch der Physiologischen Optik by H. v. Helmholtz, 2nd ed. 1896.

Franz Schmidt & Haensch (1896) Katalog über die anlässlich der Berliner Gewerbe-Ausstellung 1896 ausgestellten optischen Instrumente und Utensilien. Berlin, 36 p.

Franz Schmidt & Haensch (1931) Monochromator für Polarimeter. German patent no. 532818, 5 p. See also Handbuch der Physik 19, 1928, p. 407.

Schmidt K.E.F. (1888) Ueber die durch feine Röhrchen im Kalkspath hervorgerufenen Lichtringe und die Theorie derselben. Ann. Phys. 33, 534-548.

Schmidt K.E.F. (1889) Ueber die elliptische Polarisation des an Kalkspath reflectirten Lichtes. Ann. Phys. 37, 353-371.

Schmidt W. (1902) Bestimmung der Dielektricitätsconstanten von Krystallen mit elektrischen Wellen. Ann. Phys. 9, 919-937. Continued in 11, 114-126, 1903.

Schmidt W.J. (1917) Die Chromatophoren der Reptilienhaut. Arch. Mikrosk. Anatomie 90, 98-259.

Schmidt W.J. (1920a) Vom Polarisationsmikroskop und seiner Anwendung. Zeitschr. Wissensch. Mikrosk. 37, 1-35.

Schmidt W.J. (1920b) Das Polarisationsmikroskop in der Zoologie. Naturwissensch. 8, 783-788.

Schmidt W.J. (1924) Die Bausteine des Tierkörpers in Polarisiertem Lichte. Fr. Cohen, Bonn, 528 p.

Schmidt W.J. (1925) CMBP von E. Leitz, Wetzlar, ein Polarisationsmikroskop für Biologen. Zeitschr. Wissensch. Mikrosk. 42, 313-321.

Schmoeger M. (1880) Eine bis jetzt noch nicht beobachtete Eigenschaft des Milchzuckers. Ber. Deutsch. Chem. Gesellsch. 13, 1915-1921, with continuation 1922-1931 and 14, 2121-2126, 1881. See also a paper by E.O. Erdmann in 13, 2180-2184.

Schneiderhöhn H. (1922) Anleitung zur Mikroskopischen Bestimmung und Untersuchung von Erzen und Aufbereitungsprodukten, Besonders im Auffallenden Licht. Gesellsch. Deutsch. Metallhütten- und Bergleute, Berlin, 292 p.

Schoen A.L. (1927) A photographic method of spectrophotometry in the red and infrared. J. Opt. Soc. Am. 14, 179-186. See also J. Sci. Instrum. 3, 274-275, 1926.

Schoenberg E. (1917) On the illumination of planets. Publ. Astron. Observ. Dorpat 24(3), 78 + xxv p. His results on the Moon are reported e.g. in Acta Soc. Sci. Fenn. 50(9), 1925.

Schoenflies A.M. (1888) Ueber reguläre Gebietstheilungen des Raumes. Nachr. Gesellsch. Wiss. Göttingen 1888, 223-237. Continuation (on crystal structure) 483-501.

Scholtz M. (1907) Die optisch-aktiven Verbindungen des Schwefels, Selens, Zinns, Siliziums und Stickstoffs. Ahrens' Samml. Chem. Vorträge 11, 441-480.

Schönn J.L. (1880) Ueber ultraviolette Strahlen. Ann. Phys. 9, 483-492 and 10, 143-148.

Schönrock O. (1893) Über die elektromagnetische Drehung der Polarisationsebene in Flüssigkeiten und Salzlösungen. Zeitschr. Physikal. Chemie 11, 753-786. More in 16, 29-44, 1895.

Schönrock O. (1900) Ueber die Abhängigkeit der spezifischen Drehung des Zuckers von der Temperatur. Zeitschr. Instrumentenk. 20, 97-113.

Schönrock O. (1928) Chapter 12: Polarimetrie, in vol. 19 of Handbuch der Physik (ed. H. Konen), p. 705-776. J. Springer, Berlin.

Schorger A.W. and D.F. Smith (1916) The galactan of Larix occidentalis. J. Ind. Eng. Chem. 8, 494-499.

Schrammen A. (1927) Die Hyperfeinstruktur der Terme des Cadmiumspektrums. Ann. Phys. 83, 1161-1198.

Schrauf A. (1885-86) Ueber die Azimuthdifferenz doppeltgebrochener Strahlen. Beobachtungen auf Calcit. Zeitschr. Kristallogr. 11, 5-22.

Schultz P. (1895) Die glatte Musculatur der Wirbelthiere. Arch. Physiol. 1895, 517-550.

Schultze M. (1861) Die kolbenförmige Gebilde in der Haut von Petromyzon und ihr Verhalten im polarisirten Lichte. Arch. Anat. Physiol. 1861, 228-247, 281-303.

Schulz H. (1911) Polarisationsprismen aus Glas. Zeitschr. Instrumentenk. 31, 180-183. Schulz also wrote some theoretical papers on Nicol prisms around 1920.

Schulz H. (1912) Über die Doppelbrechung gekühlter Gläser und eine Methode zur Messung derselben. Verh. Deutsch. Phys. Gesellsch. 18, 883-897.

Schulz H. (1925) Linsenpolarisatoren. Zeitschr. Techn. Phys. 6, 614-618.

Schulz H. and A. Gleichen (1919) Die Polarisationsapparate und ihre Verwendung. F. Enke Verlag, Stuttgart, 122 p.

Schulz W.F. (1913) The use of the photo-electric cell in stellar photometry. Astrophys. J. 38, 187-191.

Schulze E. (1879) Ueber das specifische Drehungsvermögen des Isocholesterins. Ber. Deutsch. Chem. Gesellsch. 12, 249. This compound was obtained from wool fat.

Schulze E. (1892) Zur Chemie der pflanzlichen Zellmembranen. II. Zeitschr. Physiol. Chemie 16, 387-438.

Schulze E. (1910) Zur Kenntnis der Stachyose und der Lupeose. Ber. Deutsch. Chem. Gesellsch. 43, 2230-2234.

Schulze E. and E. Bosshard (1886) Untersuchungen über die Amidosäuren, welche bei der Zersetzung der Eiweissstoffe durch Salzsäure und durch Barytwasser entstehen. Zeitschr. Physiol. Chemie 10, 134-145.

Schulze E. and A. Likiernik (1893) Ueber die Constitution des Leucins. Zeitschr. Physiol. Chemie 17, 513-535.

Schulze E. and S. Frankfurt (1895) Ueber die Verbreitung des Rohrzuckers in den Pflanzen, über seine physiologische Rolle und über lösliche Kohlenhydrate, die ihn begleiten. Zeitschr. Physiol. Chemie 20, 511-555. More e.g. in 27, 267-291, 1899 and 61, 279-351, 1909.

Schulze E. and G. Trier (1910-11) Über die Identität des Vernins und des Guanosins, nebst einigen Bemerkungen über Vicin und Convicin. Zeitschr. Physiol. Chemie 70, 143-151.

Schulze E., E. Steiger and W. Maxwell (1890) Zur Chemie der Pflanzenzellmembranen.I. Zeitschr. Physiol. Chemie 14, 227-270.

Schulze-Montanus A. (1817) Ein Instrument zu den Versuchen über die Polarisation des Lichts. Ann. Phys. 26, 427-436.

Schumann H. and H. Piller (1950) Über die Verwendungsmöglichkeit moderner Polarisationsfilter in mineralogischen Mikroskopen. N. Jahrb. Mineral. Monatsh. 1950, 1-16.

Schunck C.A. (1898) A photographic investigation of the absorption spectra of chlorophyll and its derivatives in the violet and ultraviolet region of the spectrum. Proc. Royal Soc. 63, 389-396.

Schunck C.A. (1899, 1901) The yellow colouring matters accompanying chlorophyll and their spectroscopic relations. Proc. Royal Soc. 65, 177-186 and 68, 474-480.

Schunck C.A. (1903) The xanthophyll group of yellow colouring matters. Proc. Royal Soc. 72, 165-176.

Schurecht H.G. (1922) The microscopic examination of the mineral constituents of some American clays. J. Am. Ceramic Soc. 5, 3-24.

Schuster A. (1882) The genesis of spectra. Part of a committee report in British Assoc. Report 52, 120-143.

Schuster A. (1890) Experiments with Lord Rayleigh´s colour box. Proc. Royal Soc. 48, 140-149. See Rayleigh´s note in Nature 25, 64-66, 1882. This device (with Wollaston and Nicol prisms) was also used by R.A. Houstoun, Proc. Royal Soc. A102, 353-363, 1922.

Schuster A. and J.W. Nicholson (1923) An Introduction to the Theory of Optics, 3rd ed. E. Arnold & Co., London, 397 p. The first edition by A.S. appeared in 1904.

Schuster M. (1881) Ueber die optische Orientierung der Plagioklase. Mineral. Petrogr. Mitth. 3, 117-284.

Schütz E. and -. Huppert (1900) Ueber einige quantitative Verhältnisse bei der Pepsinverdauung. Pflüger's Arch. Physiol. 80, 470-526.

Schwarz M. v. (1931) The micro-optical investigation of non-ferrous alloys by polarised light. Metallurgia 4, 180-186.

Schwarzmann M. (1904) Die Polarisationsbank für die mineralogisch-optische Schausammlung. Centralbl. Mineral. 1904, 330-333.

Sède P. de (1884) L´Islande. Mission de 1883. La Nature 13 (no. 602), 18-22.

[Seebeck]'s (1828) Polarisationsapparat. Zeitschr. Physik Mathematik 2, 491-2.

Seebeck A. (1831) Ueber die Polarisationswinkel am Kalkspath. Ann. Phys. 21, 290-310 and 22, 126-136. Measurements and comparisons with Fresnel´s theory.

Seebeck A. (1833) Ueber Härteprüfung an Krystallen. In: Programm d. berlinischen Realgymnasium. Unger, Berlin. See Franz 1850, who obtained different results.

Seebeck A. (1836) Bemerkungen über die Polarisation des Lichtes durch Spiegelung, besonders in doppelbrechenden Körpern, nebst einem Auszuge aus Hrn. MacCullaghs Abhandlung über denselben Gegenstand. Ann. Phys. 38, 276-282. More, including a correction of MacCullagh´s derivations, is in 40, 462-463, 1837.

Seebeck T.J. (1813) Einige neue Versuche und Beobachtungen über Spiegelung und Brechung des Lichtes. Schweigger´s J. Chem. Physik 7, 259-298, 382-384.

Seebeck T.J. (1814) Von den entoptischen Farbenfiguren und den Bedingungen ihrer Bildung in Gläsern. Schweigger´s J. Chem. Physik 12, 1-16. Extract: Sur le développement des forces polarisantes par la pression. Bull. Soc. Philom. 49-51, 1816.

Seeber L.A. (1824) Versuch einer Erklärung des inneren Baues der festen Körper. Ann. Phys. 76, 229-248, 349-372.

Sellmeier W. (1872) Ueber die durch Aetherschwingungen erregten Mitschwingungen der Körpertheilchen und deren Rückwirkung auf die erstern, besonders zur Erklärung der Dispersion und ihrer Anomalien. Ann. Phys. 145, 399-421, 520-549 and 147, 386-403, 525-539. See also 143, 272-281, 1871. Well-known theoretical papers on dispersion.

Senarmont H. de (1840) Mémoire sur les modifications que la réflexion spéculaire à la surface des corps métalliques imprime à un rayon de la lumière polarisée. Ann. Chim. 73, 337-363. A quarter-wave compensator described here was improved by E. Wiedemann in Ann. Phys. 151, 1-50, 1874.

Senarmont H. de (1843) Note sur la théorie mathématique de la double réfraction. Liouville J. Mathém. 8, 361-378. Improved in J. École Polyt. 20 (cah. 35), 1-27, 1853.

Senarmont H. de (1845) Remarques sur la cristallisation du spath calcaire. Ann. Mines 8, 635-638. Studies on crystals brought by A. Des Cloizeaux. See also 11, 573-574, 1847.

Senarmont H. de (1847a) Mémoire sur la réflexion et la double réfraction de la lumière par les cristaux doués de l´opacité métallique. Ann. Chim. 20, 397-476.

Senarmont H. de (1847b, 1848) Mémoire sur la conductibilité des substances cristallisées pour la chaleur. Ann. Chim. 21, 457-476 and 22, 179-211. Extracts in C.R. 25, 459-461, 707-710, and a favorable review report by J.B. Biot and others on p. 829-842, 1847.

Senarmont H. de (1849) Note sur la conductibilité superficielle des corps cristallisées pour l´électricité de tension. Comptes Rendus Acad. Sci. Fr. 29, 750-752. More in Ann. Chim. 28, 257-278, 1850.

Senarmont H. de (1850) Note sur un nouveau polariscope. Ann. Chim. 28, 279-282. A device made of four quartz prisms and a Nicol prism, not widely used.

Senarmont H. de (1856) Réflexion totale de la lumière extérieurement à la surface des cristaux biréfringents. Liouville J. Mathém. 1, 305-320.

Senarmont H. de (1857) Note sur la construction d´un prisme biréfringent propre à servir de polariseur. Ann. Chim. 50, 480-481. This is Senarmont´s double-image prism which however does not seem to have been used as much as Rochon´s and Wollaston´s types.

Senftleben H. (1915) Über die Zahl der Emissionszentren der in Flammen leuchtenden Metalldämpfe und die Beziehungen dieser Zahl zu der Helligkeit der ausgesandten Spektrallinien. Ann. Phys. 47, 949-1000.

Serpek O. (1909) Verfahren zur Herstellung von Aluminiumnitrid. Patentschrift no. 48470, Eidgen. Amt f. Geistiges Eigentum, 2 p.

Seyffart J. (1890) Über eine Methode zur Bestimmung der Rotationsdispersion circular-polarisierender Substanzen. Ann. Phys. 41, 113-134. See also German patent no. 34339.

Shaffer P.A. and A.F. Hartmann (1921) The iodometric determination of copper and its use in sugar analysis, I-II. J. Biol. Chem. 45, 349-364, 365-390.

Shapiro A.E. (1973) Kinematic optics: a study of the wave theory of light in the 17th century. Arch. Hist. Exact Sci. 11, 134-266.

Shapley H. (1915) A study of the orbits of eclipsing binaries. Contrib. Princeton Univ. Observatory No. 3, 176 p.

Shapley H. (1918) Studies based on the colors and magnitudes in stellar clusters. VIII. The luminosities and distances of 139 Cepheid variables. Astrophys. J. 48, 279-294.

Shapley H. (1923) On the relative velocity of blue and yellow light. Proc. Nat. Acad. Sci. 9, 386-390.

Shepherd E.S. and G.A. Rankin (1909) The binary systems of alumina with silica, lime and magnesia (with optical study by F.E. Wright). Am. J. Sci. 28, 293-333.

Sheppard S.E. (1909) On the influence of their state in solution on the absorption spectra of dissolved dyes. Proc. Royal Soc. A82, 256-270.

Sherrard E.C. and A.W. Froehlke (1923) The action of concentrated hydrochloric acid on different celluloses. J. Am. Chem. Soc. 45, 1729-1734.

Short M.N. (1931) Microscopic Determination of the Ore Minerals. Bull. U.S. Geol. Survey 825. Government Printing Office, Washington D.C., 204 p.

Shoulejkin W. (1923) On the color of the sea. Phys. Rev. 22, 85-100.

Sidersky D. (1895) Polarisation et Saccharimétrie. Gauthier-Villars et Fils/ G. Masson, Paris, 152 p. A new edition appeared in 1909.

Siedentopf H. (1902) Über einen Mikrospectralobjectiv nach Engelmann mit ausklappbaren geradsichtigen Gittern nach Thorp und ausklappbarem Polarisator. Sitzungsber. Akad. Wiss. Berlin 1902(I), 711-719.

Siedentopf H. and R.A. Zsigmondy (1903) Über Sichtbarmachung und Grössen-bestimmung ultramikroskopischer Teilchen, mit besonderer Anwendung auf Goldrubingläser. Ann. Phys. 10, 1-39. On light scattering by colloids.

Siegbahn M. (1919) Precision measurements in the X-ray spectra. Phil. Mag. 37, 601-612.

Siegbahn M. (1921) Nouvelles mesures de précision dans le spectre de rayons X. Comptes Rendus Acad. Sci. Fr. 173, 1350-1352. More in 174, 745-746, 1922.

Siegbahn M. (1924) Spektroskopie der Röntgenstrahlen. J. Springer, Berlin, 257 p.

Siegbahn M. (1933) Interferometrische Untersuchung von Kristallflächen. Arkiv Matem. Astron. Fysik 23A no. 12, 9 p.

Sigmond A. v. (1898) Die Geschwindigkeit der Maltase-Hydrolyse. Zeitschr. Physikal. Chemie 27, 385-400.

Signer R., T. Caspersson and E. Hammarsten (1938) Molecular shape and size of thymonucleic acid. Nature 141, 122.

Silbermann J.-T. (1846) Essai d´explication du phénomène des houppes ou aigrettes visibles à l´oeil nu dans la lumière polarisée. Comptes Rendus Acad. Sci. Fr. 23, 629-633.

Silberschlag J.E. (1787) Von dem die Bilder verdoppelnden sogenannten Isländischen Crystall, oder Doppelspath. Beobachtungen und Entdeckungen aus der Naturkunde von der Gesellschaft naturforschender Freunde zu Berlin, 2(2), 1-16.

Silliman R.S. (1975) Fresnel and the emergence of Physics as a discipline. Hist. Studies Phys. Sci. 4, 137-162.

Silva G. (1913) Esame del cuneo usato nelle osservazioni fotometriche all'Osservatorio di Catania. Mem. Soc. Spettrosc. Ital. 2, 44-56.

Simon L.-J. (1901) Sur la constitution du glucose. Comptes Rendus Acad. Sci. Fr. 132, 487-490.

Singerman D. (2007) A doubt is at best an unsafe standard: measuring sugar in the early Bureau of Standards. J. Res. Nat. Inst. Standards and Technology 112, 53-66.

Sissingh R. (1891) Ueber das Kerr'sche magneto-optische Phänomen bei äquatorialer Magnetisierung an Eisen. Ann. Phys. 42, 115-141.

Skinner C.A. (1923) The polarimeter and its practical applications. J. Franklin Inst. 196, 721-750. Review.

Skinner C.A. (1925) A universal polarimeter. J. Opt. Soc. Am. 10, 491-525.

Skinner C.A. and L.B. Tuckerman (1911) Halbschatteninterferometer. Phys. Zeitschr. 12, 620-626.

Skinner H.W.B. and E.T.S. Appleyard (1928) On the excitation of polarised light by electron impact. II. Mercury. Proc. Royal Soc. A117, 224-244.

Skraup Z.H. and J. König (1901) Über die Cellobiose. Monatsh. Chemie 22, 1011-1036.

Sleeman P.R. (1884) Dr. Feussner´s new polarizing prism. Nature 29, 514-517.

Smedley-Maclean I. (1928) The isolation of a second sterol from yeast-fat. Biochem. J. 22, 22-26.

Smiles S. (1900) Contribution to the stereochemistry of sulphur: an optically active sulphine base. J. Chem. Soc. Trans. 77, 1174-1179.

Smith A. (1839) Notes on the undulatory theory of light. Cambr. Mathem. J. 1, 3-9, 77-86. See also Trans. Cambr. Philos. Soc. 6 (pt. 1), 85-89, 1836 and Phil. Mag. 12, 335-336, 1838.

Smith C.F. (1933) Polarizing louvres and their application. J. Sci. Instr. 10, 212-214. Also described by him in U.S. patent no. 1,966,769, applied for in 1933.

Smith F.H. (1955) Microscopic interferometry. Research 8, 385-395.

Smith G. (1926) A Contribution to the Mineralogy of New South Wales. Mineral Resources Publication 34, 96 p. See also p. 227 of the book “Forgotten Country” by Isabel Wilkinson, 1980.

Smith L.E. (1926) The luminescence of pure barium bromide under the action of alpha-, beta-, and gamma-rays. Phys. Rev. 28, 431-437.

Smoluchowski M. (1907) Théorie cinétique de l’opalescence des gaz à l’état critique et de certains phénomènes corrélatifs. Bull. Internat. Acad. Sci. Crac. 1907, 1057-1075.

Smoluchowski M. (1916) Experimentelle Bestätigung der Rayleigh’schen Theorie des Himmelsblaus. Bull. Internat. Acad. Sci. Crac. 1916, 218-220.

Smyth F.H. and L.H. Adams (1923) The system, calcium oxide-carbon dioxide. J. Am. Chem. Soc. 45, 1167-1184.

Société Centrale de Produits Chimiques (1891) Catalogue Géneral Illustré. Paris, 1153 p.

Société Genevoise pour la Construction d’Instruments (1912) Nouveaux spectromètres et spectrographes de précision. Catalog, 8 p.

Sohncke L. (1876) Zur Theorie des optischen Drehvermögens von Krystallen. Mathem. Ann. 9, 504-526.

Sohncke L. (1879) Entwicklung einer Theorie der Kristallstruktur. Teubner, Leipzig, with additions e.g. in Zeitschr. Krystallogr. 14, 426-446, 1888.

Sohncke L. (1886) Electromagnetische Drehung natürlichen Lichts. Ann. Phys. 27, 203-219. For additional experiments on the character of the Faraday effect, see e.g. D.B. Brace in Phil. Mag. 1, 464-475, 1901 and J. Mills in Ann. Phys. 13, 848-855, 1904.

Sohncke L. (1897) Polarisirte Fluorescenz. Sitzungsber. Bayer. Akad. Wiss. München 26, 75-117.

Sokolow W. (1898) Lagerstätte von Calcit am Baidarthor in der Krym. N. Jahrb. Mineral. 1901(2), 178-179 and Zeitschr. Kristallogr. 32, 304, 1900.

Soleil H. (1855a) Note sur un nouveau télemètre décimal biréfringent. Comptes Rendus Acad. Sci. Fr. 40, 434-436.

Soleil H. (1855b) Note sur quelques phénomènes offert par la lumière polarisée circulairement. Comptes Rendus Acad. Sci. Fr. 40, 1058-1060.

Soleil H. (1866) Sur la direction de l’axe optique dans le cristal de roche. Les Mondes 10, 191-199.

Soleil H. (1867) Catalogue des appareils d’optique construits dans les ateliers de H. Soleil. Paris, 13 p. Includes Iceland spar and many other crystals, Nicol prisms etc.

Soleil J.B. (1845) Note sur un moyen de faciliter les expériences de polarisation rotatoire. Comptes Rendus Acad. Sci. Fr. 20, 1805-1808. More in 21, 426-430.

Soleil J.B. (1847) Note sur un perfectionnement apporté au pointage du saccharimètre. Comptes Rendus Acad. Sci. Fr. 24, 973-975. See also an evaluation in 26, 162-168, 1848, and a paper by Duboscq and Soleil 1850.

Soleil J.B. (1849) Note sur l’horloge polaire de M. Wheatstone, construite et perfectionnée par M. Soleil. Comptes Rendus Acad. Sci. Fr. 28, 511-513.

Sommerfeld A. (1896) Mathematische Theorie der Diffraction. Mathem. Ann. 47, 317-374.

Sommerfeldt E. (1904) Ein für mineralogische Untersuchungen bei hoher Temperatur geeignetes Mikroskop. Zeitschr. Wissensch. Mikrosk. 21, 181-185.

Sommerfeldt E. (1905) Die mikroskopische Achsenwinkelbestimmung bei sehr kleinen Kristallpräparaten. Zeitschr. Wissensch. Mikrosk. 22, 356-362.

Sorby H.C. (1853) On the origin of slaty cleavage. Edinb. New Philos. J. 55, 137-148.

Sorby H.C. (1858) On the microscopical structure of crystals, indicating the origin of minerals and rocks. Quart. J. Geol. Soc. 14, 453-500. See also his Sur l´application du microscope à l´étude de la géologie physique, Bull. Soc. Géol. Fr. 17, 571-573, 1859-60.

Sorby H.C. (1867) On a definite method of qualitative analysis of animal and vegetable colouring-matters by means of the spectrum microscope. Proc. Royal Soc. 15, 433-455. A further illustrated description appeared in J. Royal Microsc. Soc. 1, 822-824, 1881.

Sorby H.C. (1875) On a new and improved microscope spectrum apparatus, and on its application to various branches of research. Monthly Microsc. J. 13, 198-208. On a new method of measuring the position of the bands in spectra. 14, 269-273.

Sorby H.C. (1885) Sorby's dichroiscope. J. Royal Microsc. Soc. 5, 121-122.

Soret C. (1893) Éléments de Cristallographique Physique. H. Georg, Geneva, 654 p.

Soret J.L. (1869) Sur l'illumination des corps transparents. Comptes Rendus Acad. Sci. Fr. 69, 1192-1196. Discussion on scattered light, continued in 79, 35-39, 1874.

Soret J.-L. (1874) Sur le pouvoir réfléchissant des flammes. Comptes Rendus Acad. Sci. Fr. 78, 1299-1301. See also a note by G.G. Stokes in Proc. Royal Soc. Edinb. 18, 1892.

Soret J.-L. (1878) Recherches sur l´absorption des rayons ultra-violets par diverses substances. Arch. Sci. Phys. Nat. 61, 322-359. Extracts in Comptes Rendus Acad. Sci. Fr. 86, 708-711 and 1062-1064.

Soret J.-L. (1883) Recherches sur l'absorption des rayons ultra-violets par diverses substances, V. Arch. Sci. Phys. Nat. 10, 429-494. Extracts in Comptes Rendus Acad. Sci. Fr. 97, 314-316, 572-575, 642-644, 1069-1070, and on eyes in 88, 1012-1015, 1879.

Soret J.-L. and E. Sarasin (1875, 1882) Sur la polarisation rotatoire du quartz. Comptes Rendus Acad. Sci. Fr. 81, 610-613. Continued in 83, 818-821, 1876 and 84, 1362-1365, 1877. Detailed results down to 215 nm were presented in Arch. Sci. Phys. Nat. 8, 5-59, 97-132, 201-229 with an abstract in C.R. 95, 635-638. See Tutton 1922.

Soubeiran E. (1842) Des changements moléculaires que le sucre éprouve sous l'influence de l'eau et de la chaleur. J. Pharm. 1, 1-14 and 89-104.

Soubeiran E. (1850) Des moyens de reconnaître le sirop de fécule dans les divers sirops de sucre du commerce. J. Pharm. 18, 328-337.

Soubeiran E. and H. Capitaine (1840) Sur les camphènes. J. Pharm. 26, 1-21, 65-93.

South African Geological Survey (1936) The Mineral Resources of the Union of South Africa. Compiled in the Office of the Geological Survey. (There is a chapter on Iceland spar on p. 371-373, reprinted verbatim on p. 425-427 of a 1940 edition of this work. See Coetzee 1976 for a later edition). Department of Mines, Pretoria, 454 p.

Spassky M. (1838) Note über das Nicol´sche Prisma. Ann. Phys. 44, 168-176.

Späth E. and R. Göhring (1920) Die Synthesen des Ephedrins, des Pseudoephedrins, ihrer optischen Antipoden und Razemkörper. Monatsh. Chemie 41, 319-338.

Spencer C.D. and S. Jones (1931) Design and construction of polariscopes for use in glass factories. J. Am. Ceramic Soc. 14, 512-517. See also Preston 1930.

Spencer L.J. (1908) On hopeite and other zinc phosphates and associated minerals from the Broken Hill mines, north-western Rhodesia. Mineral. Mag. 15, 1-38.

Spitta E.J. (1907) Microscopy. John Murray, London, 472 p.

Spohr J. (1886) Ueber den Einfluss der Neutralsalze und der Temperatur bei der Inversion des Rohrzuckers durch Säuren. J. Prakt. Chemie 33, 265-284. More in Zeitschr. Physikal. Chemie 2, 194-217, 1888.

Spottiswoode W. (1874a) On combinations of colour by means of polarised light. Proc. Royal Soc. 22, 354-358. Also in Proc. Royal Inst. 7 and Rev. Sci. 7.

Spottiswoode W. (1874b) Polarisation of light. Nature 9, 127-129, 167-169, 203-205, 282-285, 323-326, 383-386, 464-466, 507-508 and 10, 125-127. Also published as a book in 1874, 1886 and 1895.

Spring W. (1888, 1890) Sur la vitesse de réaction du spath d'Islande avec quelques acides. Bull. Soc. Chim. 49, 3-11. Sur la vitesse de dissolution du spath d´Islande dans l´acide chlorhydrique. 3, 177-184. See also papers in Bull. Acad. Royale Sci. Belgique 13 and 14, 1887.

Spring W. (1899) Sur l'origine de la couleur bleue du ciel. Arch. Sci. Phys. Nat. 7, 225-239. Sur l´unité d´origine du bleu de l´eau, 326-333.

Spurge C. (1887) On the effect of polish on the reflexion of light from Iceland spar. Proc. Royal Soc. 92, 242-267.

Stadthagen H. (1909) Über die Beschaffung von Kalkspat. Beiblatt Zeitschr. Instrumentenk. 1909, 218-219. Short description of a lecture, with discussion.

Stamm A.J. and T. Svedberg (1925) The use of scattered light in the determination of the distribution of size of particles in emulsions. J. Am. Chem. Soc. 47, 1582-1596.

Stammer K. (1887) Zwei neue Polarisationsinstrumente mit beschränkter Skala und für bestimmte Zwecke. Zeitschr. Verein Rübenzuckerind. 37, 474-477, see Dingler's Polyt. J. 266, 124-125 which also describes improvements in 280, 44-47, 1891.

Stanley F. (1919) Polariscopes and international saccharimetric scale. J. Ind. Eng. Chem. 11, 598-599.

Stark J. (1897) Untersuchungen über Russ. Ann. Phys. 62, 353-367.

Stark J. (1908) Weitere Bemerkungen über die thermische und chemische Absorption im Bandenspektrum. Phys. Zeitschr. 9, 889-894, more 894-900.

Stark J. (1911) Über das Schwärzungsgesetz der Normalbelichtung und über photographische Spektralphotometrie. Ann. Phys. 35, 461-485.

Stark J. (1913) Beobachtungen über den Effekt des elektrischen Feldes auf Spektrallinien. Sitzungsber. Akad. Wiss. Berlin 1913, 932-946. See also four papers by Stark and co-workers in Ann. Phys. 43, 1914.

Stark J. and W. Steubing (1908) Über die Intensitätsverteilung der Kanalstrahlen in Wasserstoff. Ann. Phys. 26, 918-926.

Stark J. and H. Lunelund (1915) Polarisation der Lichtemission der Kanalstrahlen. Ann. Phys. 46, 68-84.

Starke H. (1897) Ueber eine Methode zur Bestimmung der Dielectricitätsconstanten fester Körper. Ann. Phys. 60, 629-641.

Stas J.-S. (1892) Recherches chimiques et études spectroscopiques sur différents corps simples. Mém. Acad. Royale Bruxelles 49(8), 246 p.

Stauffer L.H. (1930) Electro-optical modification of light waves. Phys. Rev. 36, 1352-1361.

Steadman L.T. (1930) Wave-length measurements of gamma-rays from radium and its products. Phys. Rev. 36, 460-471.

Steeg W. (1857) Verzeichniss optischer Gegenstände. Ann. Phys. 101, 642-643. Advertisement offering various prisms etc. from Iceland spar and other materials.

Steeg & Reuter (1888) Polarimeter für cirkular polarisirende Flüssigkeiten. Zeitschr. Instrumentenk. 8, 427-428.

Dr. Steeg & Reuter (1914) Preisliste Nr. 6. Homburg v.d. Höhe, 166 p.

Stefan J. (1864a) Ueber die Dispersion des Lichtes durch Drehung der Polarisationsebene im Quarz. Sitzungsber. Akad. Wiss. Wien 50(2), 88-124. Extract in Ann. Phys. 122, 631-634, 1864. Superseded by Soret and Sarasin 1875.

Stefan J. (1864b) Ein Versuch über die Natur des unpolarisirten Lichtes und die Doppelbrechung des Quarzes in der Richtung seiner optischen Axe. Sitzungsber. Akad. Wiss. Wien 50(2), 380-393. Über Interferenz des weissen Lichtes bei grossen Gangunterschieden, 481-496.

Stefan J. (1864c) Theorie der doppelten Brechung. Sitzungsber. Akad. Wiss. Wien 50(2), 505-523.

Steiger E. and E. Schulze (1890) Ueber den Furfurol gebenden Bestandtheil der Weizen- und Roggenkleie. Ber. Deutsch. Chem. Gesellsch. 23, 3110-3113.

Stein G. (1907) Über die Darstellung einiger Silicate. Zeitschr. Anorg. Chemie 55, 159-174. Uses Wanner pyrometer and inspection of thin sections in polarized light.

Steiner K. (1929) Die Polarisation des Elektronenstossleuchtens bei Edelgasen. Zeitschr. Phys. 52, 516-530.

Steinriede F. (1921) Anleitung zur Mineralogischen Bodenanalyse, 2nd ed. W. Engelmann, Leipzig, 238 p.

Stenger F. (1883) Ueber das Verhalten des Kalkspaths im homogenem magnetischen Felde. Ann. Phys. 20, 304-326. His methods were improved by W. König 1887.

Stenger F. (1888) Ueber die Gesetze des Krystallmagnetismus. Ann. Phys. 35, 331-353.

Stepp W. (1919) Beiträge zur Kenntnis der reduzierenden Substanzen des Blutes. Zeitschr. Physiol. Chemie 107, 29-44.

Sterken C. and K.B. Staubermann (eds., 2000) Karl Friedrich Zöllner and the Historical Dimension of Astronomical Photometry. VUB Press, Brussels, 186 p.

Steubing W. (1908) Über die optischen Eigenschaften kolloidaler Goldlösungen. Ann. Phys. 26, 329-371.

Stewart A.W. (1919) Stereochemistry, 2nd ed. Longmans, Green & Co., London, 277 p.

Stewart B. (1860) On the nature of the light emitted by heated tourmaline. Proc. Royal Soc. 10, 503-505. Confirming preliminary results obtained by Kirchhoff 1860.

Stewart M.J. (1920) On the use of polarized light in the detection and investigation of suture meterials embedded in the tissues. British Medical J. 1920(1), 663-665.

Stewart O.M. (1897) On the absorption of the extraordinary ray in uniaxial crystals. Phys. Rev. 4, 433-456.

Stöber F. (1898) Ueber ein einfaches Theodolitgoniometer und seine Verwendung zu stauroskopischen Bestimmungen. Zeitschr. Kristallogr. 29, 25-32. See also Leiss 1899b.

Stöber F. (1924) Über einen neuen Polarisator. Zeitschr. Kristallogr. 61, 315-317. Preceded by a paper on the growing of large sodium nitrate crystals, 299-314.

Stokes G.G. (1846) On a formula for determining the optical constants of doubly refracting crystals. Cambr. and Dublin Mathem. J. 1, 183-187.

Stokes G.G. (1851a) [A note describing two lectures given to the Cambridge Philosophical Society] On the colours of thick plates, and On a new elliptic analyser. Phil. Mag. 2, 419-421.

Stokes G.G. (1851b) On the conduction of heat in crystals. Cambr. and Dublin Mathem. J. 6, 215-238.

Stokes G.G. (1852a) On the composition and resolution of streams of polarized light from different sources. Trans. Cambr. Philos. Soc. 9, 399-416. Extract in Phil. Mag. 3, 316-317.

Stokes G.G. (1852b) On the change of refrangibility of light. Proc. Royal Soc. 6, 195-201, 333-335. On fluorescence. Much more in Phil. Trans. R.S. 142 and 143.

Stokes G.G. (1859) On the bearing of the phenomena of diffraction on the direction of the vibrations in polarized light. Phil. Mag. 18, 426-427. See also his On the dynamical theory of diffraction, in Trans. Cambr. Philos. Soc. 9, 1-62, 1856.

Stokes G.G. (1862) Report on double refraction. British Assoc. Report 32, 253-282.

Stokes G.G. (1872) On the law of extraordinary refraction in Iceland spar. Proc. Royal Soc. 20, 443-445, and Phil. Mag. 44, 316. See also: Sur l´emploi du prisme dans la vérification de la loi de la double réfraction. Comptes Rendus Acad. Sci. Fr. 77, 1150-1152, 1873.

Stoll W.C. and F.C. Armstrong (1958) Optical calcite deposits in Park and Sweet Grass Counties, Montana. Bull. U.S. Geol. Survey 1042-M, 431-477.

Stone W.E. (1894) A comparison of methods for the determination of starch. J. Am. Chem. Soc. 16, 726-733.

Strasser B. (1907) Der Fizeausche Versuch über die Änderung des Polarisationsazimuths eines gebrochenen Strahles durch die Bewegung der Erde. Ann. Phys. 24, 137-144.

Stromeyer F. (1813) Ueber den Arragonit, und worin er von dem rhomboidalen Kalkspath chemisch verschieden ist. Ann. Phys. 45, 217-225. Entdeckung der wahren Natur des Arragonits und seiner chemischen Verschiedenheit von dem Kalkspathe. Ann. Phys. 43, 229-235. F.S. claimed that the cause of aragonite crystallizing in a different class from calcite was due to chemical causes, e.g. strontium content of the former.

Stromeyer F. (1814) De la différence chimique entre l´arragonite et le spath calcaire rhomboidal. Ann. Chim. 92, 254-299, extract in Bull. Soc. Philom. 1815, 25-26. Cf. papers on aragonite etc. by L.N. Vauquelin in Ann. Chim. 92, 311-318, 1814 and by A. Laugier in J. Mines 36, 313-316, 1814.

H. Struers Chemiske Laboratorium (1925) Hovedprisliste over Instrumenter og Apparater. Catalog of laboratory equipment, including polarimeters. Copenhagen, 448 p.

Strutt J.W. (1871a; later Lord Rayleigh) On the light from the sky, its polarization and colour. Phil. Mag. 41, 107-120, 274-279.

Strutt J.W. (1871b) On the scattering of light by small particles. Phil. Mag. 41, 447-454. Explanation of J. Tyndall´s observations on smoke etc.

Strutt J.W. (1871c) On double refraction. Phil. Mag. 41, 519-528.

Stuart H.A. (1931) Kerr-Effekt, Lichtzerstreuung und Molekülbau. Ergebn. Exakten Naturwissensch. 10, 159-206. Abstract in Zentralbl. Mathematik.

Stuart H.A. (1936) Lichtzerstreuung im Gebiete des sichtbaren Spektrums. Chapter in Hand- und Jahrb. Chem. Physik 8-II (eds. A. Eucken and K.E. Wolf), 1-104.

Stubbs C.M. and E.B.R. Prideaux (1912) A spectro-photometric comparison of the emissivity of solid and liquid gold at high temperatures with that of a full radiator. Proc. Royal Soc. A87, 451-465.

Stuchtey K. and A. Wegener (1911) Die Albedo der Wolken und der Erde. Nachr. Gesellsch. Wiss. Göttingen 1911, 209-235.

Stumpf F. (1912) Optische Beobachtungen an einer flüssig-kristallinischen aktiven Substanz. Ann. Phys. 37, 351-379.

Sun S.F. (2004) Physical Chemistry of Macromolecules, 2nd ed. Wiley, New York.

Sutherland J. (1841) On the polarisation of the chemical rays of light. Phil. Mag. 19, 52-58, extract in Ann. Phys. 54, 434-436. See also a paper on similar observations by É. Wartmann in Arch. Sci. Phys. Nat. 15, 214-216, 1850.

Sutton H. (1890) Le problème de télephanie. Lum. Électr. 38, 538-541 (from Telegr. J. 27).

Svirbely J.L. and A. Szent-Györgyi (1933) The chemical nature of Vitamin C. Biochem. J. 27, 279-285.

Swan W. (1849) Experiments on the ordinary refraction of Iceland spar. Trans. Royal Soc. Edinb. 16, 375-378.

Sylvester J.J. (1837) Analytical development of Fresnel´s optical theory of crystals. Phil. Mag. 11, 461-469, 537-541. Continued in 12, 73-83, 341-345, 1838.

Syndicat des Constructeurs en Instruments d'Optique & de Précision (1901-02) L'Industrie Française des Instruments de Précision. Paris, 271 p.

Szivessy G. (1921) Neukonstruktion des Braceschen Halbschattenkompensators. Zeitschr. Phys. 6, 311-318. For theory, see C. Bergholm in Ann. Phys. 44, 1914.

Szivessy G. (1924) Über den elektrooptischen Kerreffekt bei Gasen. Zeitschr. Phys. 26, 323-342.

Tait P.G. (1880) On some applications of rotatory polarization. Proc. Royal Soc. Edinb. 10, 473-474. A rotatory polarisation spectroscope of great dispersion. Nature 22, 360-361.

Takahashi W.N. and T.E. Rawlins (1933) Rod-shaped particles in tobacco mosaic virus demonstrated by stream double refraction. Science 77, 26-27. More in 81 and 85.

Talbot H. Fox (1834a,b) Facts relating to optical science, no. II: On Mr. Nicol's polarizing eye-

piece. Phil. Mag. 4, 289-290. Experiments on light. 5, 321-334. More in 9, 288-291, 1836. Includes a description of a polarized-light microscope, see also D. Brewster: On an improvement in the polarizing microscope, British Assoc. Report 10, 10, 1840. Brewster had in fact made simple devices of this kind already in 1818-19.
Talbot H. Fox (1837) On the optical phenomena of certain crystals. Phil. Trans. Royal Soc. 127, 25-28. Further observations on the optical phenomena of crystals, 29-36. Reprinted in the book by Pritchard 1845. See also Talbot's paper On analytic crystals, Phil. Mag. 14, 19-21, 1839.
Talbot H. Fox (1872) On some optical experiments. Proc. Royal Soc. Edinb. 7, 466-470.
Tanford C. (1961) Physical Chemistry of Macromolecules. J. Wiley & Sons, New York, 710 p.
Tanret C. (1879) De l'ergotinine. Ann. Chim. 17, 493-512.
Tanret C. (1890) Sur un nouveau principe immédiat de l'ergot de seigle. Ann. Chim. 20, 289-297.
Tanret C. (1893) Sur l'inuline, la pseudo-inuline et l'inulénine. Bull. Soc. Chim. 9, 200-207. More 227-234 and 622-629.
Tanret C. (1895) Sur les modifications moléculaires du glucose. Bull. Soc. Chim. 13, 728-735. Extract in C.R. 120, 1060-1062, and discussion by M. Berthelot 1019-1023.
Tanret C. (1896) Sur les modifications moléculaires et la multirotation des sucres. Bull. Soc. Chim. 15, 195-205, 349-361.
Tanret C. (1903) Sur le stachyose. Bull. Soc. Chim. 29, 888-896.
Tanret C. (1908) Sur l'ergostérine et la fongistérine. Ann. Chim. 15, 313-330.
Tanret G. (1906) Sur le mélézitose et le turanose. Bull. Soc. Chim. 35, 816-825.
Tardy L.H. (1928) Le remplacement de l´oeil par la cellule photoélectrique sur les spectrophotomètres visuels. Revue d´Optique 7, 189-195.
Tardy H.-L. (1929) Méthode pratique d´examen et de mesure de la biréfringence des verres d´optique. Revue d´Optique 8, 59-69.
Tauern O.D. (1910) Über das Auftreten des Kerrphänomens in Gläsern und über eine Bestimmung der Kerr-konstanten für Schwefelkohlenstoff. Ann. Phys. 32, 1064-1084.
Taylor T. (1885) To distinguish one fat from another by means of the microscope. Proc. Am. Soc. Microscopists 7, 128-138. See also: A new pocket polariscope. Oleomargariscope. 10, 159-160, 1888.
Teall J.J.H. (1888) British Petrography. Dulau & Co., London, 469 p.
Thaysen A.C., W.E. Bakes and B.M. Green (1929) On the nature of the carbohydrates found in the Jerusalem artichoke. Biochem. J. 23, 444-455.
Thenard L.J. and J.B. Biot (1809) Mémoire sur l´analyse comparée de l´arragonite et du carbonate de chaux rhomboïdal.....Mém. Soc. Arcueil 2, 176-206. Extract in Bull. Soc. Philom. 1, 32-35, 1807. Translation in Ann. Phys. 31, 297-304, 1809.
Thiele H. and R. Richter (1900) Zur Titerstellung der Normalsäuren. Zeitschr. Angew. Chemie 13, 486-489.
Thierfelder H. (1890) Ueber die Identität des Gehirnzuckers mit Galactose. Zeitschr. Physiol. Chemie 14, 209-216.
Arthur H. Thomas Co. (1914) Laboratory Apparatus and Reagents. Philadelphia, 579 p.
Thompson M. de K. and R.H. Lombard (1910) On the equilibrium of the system consisting of calcium carbide, calcium cyanamide, carbon, and nitrogen. Proc. Am. Acad. 46, 246-270.
Thompson S.P. (1886) Notes on some new polarizing prisms. Phil. Mag. 21, 476-481, see also 12, 349-351, 1881 and on twin prisms in 24, 397-401, 1887.
Thompson S.P. (1889) Optical torque. Proc. Royal Inst. 12, 474-497.
Thompson S.P. (1905) On the Nicol prism and its modern varieties. Proc. Optical Convention, 1905, 216-235. Williams and Norgate, London.
Thomson J.J. (1880) On Maxwell´s theory of light. Phil. Mag. 9, 284-291.
Thomson W., later Lord Kelvin (1847) On a mechanical representation of electric, magnetic and galvanic forces. Cambr. and Dublin Mathem. J. 2, 61-65.

Thomson W. (1851) On the theory of magnetic induction in crystalline and non-crystalline substances. Phil. Mag. 1, 177-186.

Thomson W. (1856) Dynamical illustrations of the magnetic and the helicoidal rotatory effects of transparent bodies on polarized light. Proc. Royal Soc. 8, 150-158.

Thomson W. (1887-88) On Cauchy´s and Green´s doctrine of extraneous force to explain dynamically Fresnel´s kinematics of double refraction. Proc. Royal Soc. Edinb. 15, 21-33.

Thomson W. (1888) On the reflexion and refraction of light. Phil. Mag. 26, 414-425, 500-501.

Thomson W. (1888-89) On molecular tactics of crystals and of the artificial twinning of Iceland Spar. Proc. Royal Soc. Edinb. 16, 707-720. Part translated in C.R. 109, 333-337.

Thomson W. (1890) On a mechanism for the constitution of the ether. Proc. Royal Soc. Edinb. 17, 127-133. Also e.g. in C.R. 109, 453-455, 1889.

Thorarensen T. (1966) I Fotspor Fedranna (Following in their Fathers' Footsteps). Fjölvi, Reykjavik, 391 p. On political history in Iceland, including events around 1910.

Thordarson S. (1945) Saga silfurbergsins. Náttúrufræðingurinn 15, 96-107. History of Iceland spar and its uses, in Icelandic. No references are quoted.

Thoroddsen T. (1889) Die Fundstätte des isländischen Kalkspathes. Zeitschr. Instrumentenk. 9, 391-393, also in Himmel und Erde 1, 471-474.

Thoroddsen T. (1890) Nogle Bemærkninger om de islandske Findesteder for Dobbelspath. Geol. Fören. Förh. 12, 247-254. Translated in Himmel und Erde 3, 182-187, 1891.

Thoroddsen T. (1892-1904) Landfræðissaga Íslands I-IV. Hið íslenska bókmenntafélag, Copenhagen, 259+368+334+410 p. An extensive review of geological and geographical research in Iceland up to that time, including several items relevant to the Helgustadir quarry. A new illustrated edition was published in Reykjavík 2003-09.

Thoroddsen T. (1958-60) Ferðabók I-IV, 2nd ed. Snæbjörn Jónsson & Co., Reykjavík, 391+314+367+391 p. Accounts of his travels and geological research in Iceland in 1882-98.

Tiemann F. (1885) Ueber Glucovanillin und Glucovanillylalkohol. Ber. Deutsch. Chem. Gesellsch. 18, 1595-1600.

Tiemann F. (1895) Ueber Campher. Ber. Deutsch. Chem. Gesellsch. 28, 1079-1093.

Tiemann F. and W. Haarmann (1874) Ueber das Coniferin und seine Umwandlung in das aromatische Princip der Vanille. Ber. Deutsch. Chem. Gesellsch. 7, 608-623.

Timoshenko S. (1953) History of Strength of Materials. McGraw-Hill, New York, 452 p. Reissued by Dover Publications, New York, in 1983.

Tingle A. and A.A. Ferguson (1916) Factors connecting the concentration and the optical rotatory power of aqueous solutions of nicotine. Trans. Royal Soc. Canada 10, 19-25. A new method for the determination of nicotine in tobacco, 27-31.

Tippmann F.F. (1931) Kurze Betrachtungen über das Kalkhydrat und seine Rolle beim Erhärtungsvorgang des Portlandzementes. Kolloid-Zeitschr. 55, 85-107.

Toennies G. and T.F. Lavine (1930) On the optical rotation of l-cystine. J. Biol. Chem. 89, 153-166.

Tollens B. (1877) Ueber die specifische Drehung des Rohrzuckers. Ber. Deutsch. Chem. Gesellsch. 10, 1404-1414. More in 11, 1800-1810, 1878 and 17, 1751-1758, 1884.

Tollens B. (1886) Untersuchung von Melitose oder Raffinose aus Melasse, Baumwollsamen und Eucalyptus-Manna, I-III. Liebig's Ann. Chemie 232, 169-204.

Tollens B. (1898) Kurzes Handbuch der Kohlenhydrate. Erster Band, 2nd ed. E. Trewedt, Breslau, 374 p.

Tolman L.M. (1902) The polarization of fruits, jellies, jams, and honies. J. Am. Chem. Soc. 24, 515-524.

Tool A.Q. and J. Valasek (1920) Concerning the annealing and characteristics of glass. Sci. Pap. Bur. Std. 15, 537-571.

Tomaschek R. (1934) Grimsehl's Lehrbuch der Physik, 6th ed., vol. II(2): Materie und Äther. Teubner, Leipzig, 426 p.

Tonn E. (1894) Über die Gültigkeit von Newtons Farbenmischungsgesetz. Zeitschr. Psychol. Physiol. Sinnesorg. 7, 279-304.

Tony-Garcin -. (1887) Recherche, dans les vins, des sucres de canne, glucoses et dextrines frauduleusement ajoutés. Comptes Rendus Acad. Sci. Fr. 104, 1002-1003.

Tool A.Q. (1910) A method for measuring ellipticity, and the determination of optical constants of metals. Phys. Rev. 31, 1-25.

Torelli de Narci P. (1803) Lettre…sur la double réfraction du cristal de roche, appliquée à la construction des milieux doublement réfringens, instruments inventés par Alexis Rochon, pour mesurer les petits angles. J. Mines 14, 251-260. See also a paper on double refraction in quartz, in 11, 521-524, 1801-02.

Trannin H. (1876) Mesures photométriques dans les différentes regions du spectre. J. Phys. 5, 297-304. Includes a short description of a polarization photometer.

Trannin H. (1878) Mesure des intensités relatives des diverses radiations constitutives des sources lumineuses. Mém. Soc. Sci. Agric. Arts Lille 5, 1-73.

Trannin H. (1884) [Description of a new vertical-tube polarimeter] Bull. Soc. Industr. Nord de Fr. 1884, 107- . Extract in Dingler's Polyt. J. 255, 293-294, 1885.

Traubenberg H.R.v. and S. Levy (1926) Über den Einfluss schwacher Magnetfelder auf den Polarisationszustand des von Wasserstoff-Kanalstrahlen ausgesandten Lichtes. Zeitschr. Phys. 14, 549-564.

Trendelenburg W. (1905) Quantitative Untersuchungen über die Bleichung des Sehpurpurs in monochromatischem Licht. Zeitschr. Psychol. Physiol. Sinnesorg. 37, 1-55.

Trépied C. (1876) Sur la photométrie des étoiles et la transparence de l'air. Comptes Rendus Acad. Sci. Fr. 82, 557-559.

Trey H. (1903) Ein Beitrag zu den Rotationserscheinungen der Laktose. Zeitschr. Physikal. Chemie 46, 620-719.

Tronstad L. (1929) Optische Untersuchungen an elektrochemisch aktivierten und passivierten Metallspiegeln. Zeitschr. Physikal. Chemie 142, 241-281.

Tronstad L. (1932) Optische Untersuchungen zur Frage der Passivität der Metalle. I. Eisen und Stahl. Zeitschr. Physikal. Chemie 158, 369-397.

Tronstad L. (1933) The investigation of thin surface films of metals by means of reflected polarized light. Trans. Faraday Soc. 29, 502-514.

Tschermak G. (1869a) Bemerkungen über die chemische Constitution der plagioclastischen Feldspathe. Ann. Phys. 138, 162-171. The plagioclases were studied in detail later e.g. by A. Michel-Lévy and F. Becke.

Tschermak G. (1869b) Mikroskopische Unterscheidung der Mineralien aus der Augit-, Amphibol- und Biotitgruppe. Sitzungsber. Akad. Wiss. Wien 60(1), 5-16.

Tschermak G. (1881) Ueber die Isomorphie der rhomboëdrischen Carbonate und des Natriumsalpeters. Mineral. Petrogr. Mitth. 4, 99-121.

Tschermak G. (1894) Lehrbuch der Mineralogie, 4th ed. A. Hölder, Wien, 607 p.

Tschermak-Becke (1915) Lehrbuch der Mineralogie, 7th ed. A. Hölder, Wien/Leipzig, 738 p.

Tschernorutzky H. (1912) Das Verhalten einiger Nucleinsäuren zu glukosidspaltenden Fermenten. Zeitschr. Physiol. Chemie 80, 298-306.

Tschirwinsky P.N. (1910) Eine neue Doppelspatlagerstätte auf dem Kara-Dag in der Krim. Zeitschr. Kristallogr. 47, 289 (extracted from a Russian mining yearbook, 1907).

Tschugaeff L. (1911) Über einen neuen Typus der anomalen Rotationsdispersion. Ein Beitrag zur Kenntnis der optischen Superposition. Ber. Deutsch. Chem. Gesellsch. 44, 2023-2030.

Tu Y. (1932) A precision comparison of calculated and observed grating constants of crystals. Phys. Rev. 40, 662-675.

Tuchschmid A. (1883) Das innere Wärmeleitungsvermögen von Quartz, Kalkspath und Steinsalz. Thesis, Zürich, 48 p. Extract in Ann. Phys. Beibl. 7, 490-492, 1884. Tuchschmid was A. Einstein's physics teacher in Kantonsschule Aarau.

Tucker J.H. (1881) A Manual of Sugar Analysis. D. van Nostrand, New York, 353 p.

Turnbull F.B. (1912) Iceland spar and the polariscope. Trans. Edinb. Field Naturalists' and Microsc. Soc. 6, 439-447.

Turner E. and W. Gregory (1846) Elements of Chemistry and Outlines of Organic Chemistry, 7th edition. Thomas, Cowperthwait & Co., Philadelphia, 848 p.

Turner G. L'E. (1989) The Great Age of the Microscope. Adam Hilger, Bristol, 379 p.

Tutton A.E.H. (1908) The crystallization of water. The Times, 23 Dec., p. 4.

Tutton A.E.H. (1922) Crystallography and Practical Crystal Measurement I-II, 2nd ed. Macmillan and Co. London, 1446 p. Reprinted in New Delhi 1964.

Twyman F. (1906) Improvements in the Hüfner type of spectrophotometer. Proc. Phys. Soc. 20, 467-475.

Tyndall E.P.T. (1923) Optical properties of some metallic sulfides. Phys. Rev. 21, 162-180.

Tyndall J. (1851) Ueber Diamagnetismus und magnekrystallinische Wirkung. Ann. Phys. 83, 384-416.

Tyndall J. (1853) On some of the eruptive phenomena in Iceland. Proc. Royal Inst. 1, 329-335, 1851-54.

Tyndall J. (1855, 1856) On the nature of the force by which bodies are repelled from the poles of a magnet…Phil. Trans. Royal Soc. 145, 1-51. Further researches on the polarity of the diamagnetic force. 146, 237-256.

Tyndall J. (1869a,b) On chemical rays, and the light from the sky. Proc. Royal Inst. 5, 429-450. On the blue colour of the sky, the polarization of skylight, and the polarization of light by cloudy matter generally. Phil. Mag. 37, 384-394 and Proc. Royal Soc. 17, 223-233. J.-L. Soret, A. Lallemand and E. Hagenbach were writing on similar matters in French journals at this time.

Tyndall J. (1870a) On the action of rays of high refrangibility upon gaseous matter. Phil. Trans. Royal Soc. 160, 333-365. See also his paper in Nature 2, 489-490.

Tyndall J. (1870b) Researches on Diamagnetism and Magnecrystallic Action. Longmans, Green & Co., London, 361 p. An abbreviated second edition appeared in 1888, 288 p.

Tyndall J. (1894) Faraday as a Discoverer, 5th ed. Longmans, Green & Co., London, 199 p.

Tyndall J. and H. Knoblauch (1850) On the deportment of crystalline bodies between the poles of a magnet. Phil. Mag. 36, 178-183. Second memoir on the magneto-optic properties of crystals, and the relation of magnetism and diamagnetism to molecular arrangement. 37, 1-33. More in Ann. Phys. 79, 233-241 and 81, 481-499. See also J.T.´s paper: Further researches on the polarity of the diamagnetic force, Phil. Trans. Royal Soc. 146, 237-259, 1856.

Uljanin W. v. (1897) Über das Lambert'sche Gesetz und die Polarisation der schief emittirten Strahlung. Ann. Phys. 62, 528-542.

[Ultzmann R.] (1886) Saccharometer. J. Royal Microsc. Soc. 6, 687-688. This inexpensive device was manufactured by Reichert in Wien, maybe for up to 40 years.

Umlauf K. (1892) Ueber Doppelbrechung in rotierenden Flüssigkeiten. Ann. Phys. 45, 304-315.

Umow N. (1912) Eine spektropolariskopische Methode zur Erforschung der Lichtabsorption und der Natur der Farbstoffe. Phys. Zeitschr. 13, 962-971.

Underhill F.P. and M.S. Fine (1911) Studies in carbohydrate metabolism II. The prevention and inhibition of pancreatic diabetes, J. Biol. Chem. 10, 271-285.

Urech F. (1880) Strobometrische Beobachtung der Intervertirungs-geschwindigkeit von

Rohrzucker durch concentrierte Salzsäure bei gewöhnlicher Temperatur. Ber. Deutsch. Chem. Gesellsch. 13, 1696-1697, and many other papers in that journal 1882-88.

Urey H.C. (1934) Significance of the hydrogen isotopes. Ind. Eng. Chem. 26, 803-806.

Ussing N.V. (1902) Mineralproduktionen i Danmark ved Aaret 1900. Danmarks Geol. Undersögelse, II. Række nr. 12. A statement on activities at the Helgustadir quarry is on p. 102-104.

Vahlen E. (1895-96) Die specifische Rotation der Cholalsäure, Choleïnsäure und Desoxycholsäure. Zeitschr. Physiol. Chemie 21, 253-273.

Vaillant P. (1903) Étude spectrophotométrique de quelques électrolytes en solution. Ann. Chim. 28, 213-282.

Valasek J. (1922) Properties of Rochelle salt related to the piezo-electric effect. Phys. Rev. 20, 639-664.

Valenta E. (1906) Essence de résine, essence de pin et essence de térébenthine. Translation in Moniteur Scient. 65, 523-527 from Chemiker-Zeitung no. 60, 1905.

Valentin G. (1858) Neue Untersuchungen über die Polarisations-Erscheinungen der Krystalllinsen des Menschen und der Thiere. Graefe's Arch. Ophthalmol. 4, 227-268.

Valentin G. (1861) Die Untersuchung der Pflanzen- und Thiergewebe in Polarisirtem Lichte. W. Engelmann, Leipzig, 312 p.

Vallery-Radot R. (1900) La Vie de Pasteur. An English translation by R.L. Devonshire was published in 1906 by Constable & Co., London, 484 p.

Van Nostrand's Scientific Encyclopedia (1989) 7th edition in two volumes, ed. D.M. Considine. Van Nostrand Reinhold, New York, 3180 p. Various articles.

Vater H. (1886) Der Apparat von Warburg und Koch zur Bestimmung der Elasticitätscoefficienten, sowie Anwendung desselben auf zur Axe senkrechte Platten von Kalkspath und Apatit. Zeitschr. Kristallogr. 11, 549-586.

Vater H. (1893,1899) Ueber den Einfluss der Lösungsgenossen auf die Krystallisation des Calciumkarbonats. Zeitschr. Kristallogr. 21, 433-490 and 30, 485-508.

Ventzke K. (1842,1843) Ueber die verschiedenen Zuckerarten und verwandte Verbindungen, in Beziehung auf ihr optisches Verhalten und dessen praktische Anwendung. J. Prakt. Chem. 25, 65-84 and 28, 101-116. Includes description of a polarimeter with two Nicol prisms.

Verdet É. (1854) Recherches sur les propriétés optiques développées dans tous les corps par l´action du magnétisme. Ann. Chim. 41, 370-412 and 43, 37-44.

Verdet É. (1856 and later) Note sur les propriétés optiques des corps transparents soumis à l´action du magnétisme. Comptes Rendus Acad. Sci. Fr. 43, 529-532. More in 44, 1209-1213, 1857. Also Ann. Chim. 52, 129-163, 1858 and 69, 415-491, 1863, the latter being extracted in C.R. 56, 630-632, 1863 and 57, 670-674, 1863.

Verdet É. (1865) Étude sur la constitution de la lumière non polarisée et de la lumière partiellement polarisée. Ann. École Normale 2, 291-316.

Verdet É. (1869) Leçons d´Optique Physique I. Masson et Fils, Paris, 584 p.

Verdet-Exner (1887) Vorlesungen über die Wellentheorie des Lichtes, II. This is K. Exner´s translation of Leçons d´Optique Physique II (publ. 1870) with additional material by Exner. F. Vieweg und Sohn, Braunschweig, 528 p.

Vernois M. and A. Becquerel (1853) Recherches sur le lait. Deuxième partie. Ann. Hyg. Publ. Méd. Légale 50, 43-147.

Verschaffelt J. (1896) Trois cas particuliers de réfraction cristalline. Bull. Soc. Fr. Minéral. 19, 40-64.

Vèzes M. (1921) Sur la composition de l'essence de térébenthine française. Comptes Rendus Acad. Sci. Fr. 172, 977-980.

Vickers A.E.J. (1956) The polarizing microscope in organic chemistry and biology. Research 9, 67-78.

Vignon L. (1874) Recherches sur la mannite. Ann. Chim. 2, 433-473.

Viola C. (1897) Ueber ein Universalinstrument für Kristallographie. Zeitschr. Kristallogr. 28, 165-168.

Violle J. (1881) Intensités lumineuses des radiations émises par le platine incandescent. Comptes Rendus Acad. Sci. Fr. 92, 866-868, continued p. 1204-1206.

Violle J. (1884) Sur l'étalon absolu de la lumière. Ann. Chim. 3, 373-407.

Violle J. (1887) Polarisation par émission. Comptes Rendus Acad. Sci. Fr. 105, 111-114.

Vogel F. (1885) Aenderung der Lichtbrechung in Glas und Kalkspat mit der Temperatur. Ann. Phys. 25, 87-94.

Vogel H.C. (1877) Spectral-photometrische Untersuchungen insbesondere zur Bestimmung der Absorption der die Sonne umgebenden Gashülle. Monatsber. Akad. Wiss. Berlin 1877, 104-142.

Vogel H.C. (1880) Resultate spectralphotometrischer Untersuchungen. Monatsber. Akad. Wiss. Berlin 1880, 801-811.

Vogel H.W. (1879) Über die Spectra des Wasserstoffs, Quecksilbers und Stickstoffs. Monatsber. Akad. Wiss. Berlin 1879, 586-604.

Vogel H.W. (1880) Über die neuen Wasserstofflinien, die Spectra der weissen Fixsterne und die Dissociation des Calciums. Monatsber. Akad. Wiss. Berlin 1880, 192-198, see also Astron. Nachr. 96, 327-330.

Vogelsang H. (1867) Philosophie der Geologie und Mikroskopische Gesteinsstudien. Max Cohen & Sohn, Bonn, 229 p.

Voigt W. (1887) Theoretische Studien über die Elasticitätsverhältnisse der Krystalle. Abh. Gesellsch. Wiss. Göttingen 34, 100 p.

Voigt W. (1889a) Bestimmung der Elasticitäts-Constanten für Kalkspath. Nachr. Gesellsch. Wiss. Göttingen 1889, 483-511, with an appendix on slip planes 512-519.

Voigt W. (1889b) Ueber die Beziehung zwischen den beiden Elasticitätsconstanten isotroper Körper. Ann. Phys 38, 573-587.

Voigt W. (1891) Zur Theorie des Lichtes. Ann. Phys. 43, 410-437.

Voigt W. (1898) Ueber den Zusammenhang zwischen dem Zeeman'schen und dem Faraday'schen Phänomen. Nachr. Gesellsch. Wiss. Göttingen 1898, 329-344. Zur Theorie der von den Herren Macaluso und Corbino entdeckten Erscheinungen, 349-354. Doppelbrechung von im Magnetfelde befindlichem Natriumdampf in der Richtung normal zu den Kraftlinien, 355-359.

Voigt W. (1899) Bemerkung über die Grösse der Spannungen und Deformationen, bei denen Gleitschichten in Kalkspath entstehen. Ann. Phys. 67, 201-208. See also an earlier paper in 39, 432-439, 1890.

Voigt W. (1899-1900) Neuere Untersuchungen über die optischen Wirkungen eines Magnetfeldes. Phys. Zeitschr. 1, 116-120, 128-131, 138-143. Review on Zeeman effect.

Voigt W. (1901) Eine Methode zur Untersuchung des Polarisationszustandes von ultraviolettem Lichte. Phys. Zeitschr. 2, 303-306.

Voigt W. (1910) Lehrbuch der Kristallphysik (mit Ausschluss der Kristalloptik). Teubner, Leipzig. Reprinted with some additions in 1928 and 1966, 978 p.

Voigt W. and S. Kinoshita (1907) Bestimmung absoluter Werte von Magnetisierungs-zahlen, insbesondere für Kristalle. Nachr. Gesellsch. Wiss. Göttingen 1907, 123-144.

Voit E. (1867) Ueber die Diffusion von Flüssigkeiten. Ann. Phys. 130, 227-240, 393-423.

Volger O. (1856) Der Asterismus. Sitzungsber. Akad. Wiss. Wien 19, 103-116. Introduction by W. Haidinger p. 98-102.

Vorländer D. (1908) Über durchsichtig klare, krystallinische Flüssigkeiten. Ber. Deutsch. Chem. Gesellsch. 41, 2033-2052. On liquid crystals; see also Lehmann.

Vorländer D. and R. Walter (1925) Die mechanisch erzwungene Doppelbrechung der amorphen Flüssigkeiten im Zusammenhang mit der molecularen Gestalt. Zeitschr. Physikal. Chemie 118, 1-36.

Vorländer D., W. Selke and G. Kreiss (1925) Über den doppelbrechenden weissen Phosphor. Ber. Deutsch. Chem. Gesellsch. 58, 1802-1806. See also p. 2652-2656.

Voss V. (1918) The ratio of the intensities of the D lines of sodium. Phys. Rev. 11, 21-28.

Vranek J. (1917) Über die photochemische Zersetzung des Kaliumkobaltioxalats. Zeitschr. Elektrochemie 23, 336-351.

Vrba K. (1871) Ueber die Ergebnisse der mikroskopischen Forschungen auf dem Gebiete der Mineralogie und Petrographie. Lotos 21, 123-138.

Wadlund A.P.R. (1928) Absolute X-ray wave-length measurements. Phys. Rev. 32, 841-849.

Waesche H.H. (1960) Quartz crystals and optical calcite. In: Industrial Minerals and Rocks, 3rd ed. (ed. J.L. Gillson). A.I.M.E., New York, 687-698.

Waetzmann E. (editor, 1934) Technische Akustik. Wien-Harms Handbuch der Experimentalphysik vol. 17, Part 3. Akademische Verlagsgesellschaft, Leipzig.

Wagenmann C. (1842) Ueber die Benutzung der Polarisation des Lichtes zur Prüfung zuckerhaltiger Flüssigkeiten. Dingler's Polyt. J. 84, 271-283.

Wagner E. and H. Kulenkampff (1922) Die Intensität der Reflexion von Röntgenstrahlen verschiedener Wellenlänge an Kalkspat und Steinsalz. Ann. Phys. 68, 369-413.

Wagner P. (1870) Ueber quantitative Bestimmung der Kohlensäure. Zeitschr. Anal. Chemie 9, 445-450.

Wahl W. (1913) Physico-chemical determinations at high pressures by optical methods. Phil. Trans. Royal Soc. A212, 117-148.

Wahlstrom E.E. (1969) Optical Crystallography, 4th ed. J. Wiley, New York, 489 p.

Waidner C.W. and G.K. Burgess (1904) On the temperature of the arc. Phys. Rev. 19, 241-257.

Walden P. (1894) Über die optische Drehung einiger Derivaten des aktiven Amylalkohols. Zeitschr. Physikal. Chemie 15, 638-655.

Walden P. (1896) Ueber die gegenseitige Umwandlung optischer Antipoden. Ber. Deutsch. Chem. Gesellsch. 29, 133-138. Unexpected but useful reaction. Continuation in 30, 2795-2798 (with O. Lutz) and 3146-3151, 1897, also in 32, 1899.

Walden P. (1897) Ueber ein neues, die Drehungsgrösse steigerndes Mittel. Ber. Deutsch. Chem. Gesellsch. 30, 2889-2895.

Walden P. (1898) Ueber Autoracemisirung. Ber. Deutsch. Chem. Gesellsch. 31, 1416-1422.

Walden P. (1900) Fünfundzwanzig Jahre stereochemischer Forschung (Rückblicke und Ausblicke). Naturwiss. Rundschau 15, 145-148, 157-160, 169-173, 185-188, 197-199.

Walden P. (1919) Optische Umkehrserscheinungen (Waldensche Umkehrung). F. Vieweg und Sohn, Braunschweig, 214 p. Historical review.

Walden P. (1925a,b) Vergangenheit und Gegenwart der Stereochemie. Naturwissensch. 13, 301-312, 331-336, 352-360, 376-384. Fünfzig Jahre stereochemischer Lehre und Forschung. Ber. Deutsch. Chem. Gesellsch. 58, 237-265.

Walker G.P.L. (1959) Geology of the Reydarfjördur area, Eastern Iceland. Quart. J. Geol. Soc. London 114, 367-393.

Walker G.P.L. (1974) The structure of Eastern Iceland. In: Geodynamics of Iceland and the North Atlantic Area (ed. Leó Kristjánsson), 177-188. Reidel, Dordrecht.

Walker J. (1887) An account of Cauchy's theory of reflection and refraction of light. Proc. Phys. Soc. 7, 146-169.

Walker J.W. and V.K. Krieble (1909) The hydrolysis of amygdalin by acids. I. J. Chem. Soc. Trans. 95, 1369-1377.

Wallace R.J. (1907) Studies in sensitometry I. Astrophys. J. 25, 116-150.

Wallach O. (1885) Zur Kenntniss der Terpene und ätherischen Oele. Liebig's Ann. Chemie 227, 277-302. More on racemization in 239, 1-54, 1887.

Wallach O. (1888) Zur Kenntniss der Terpene und ätherischen Oele. 8. Liebig's Ann. Chemie 246, 221-239.

Wallach O. (1891) Ueber Terpene und Campher. Ber. Deutsch. Chem. Gesellsch. 24, 1525-1579, review lecture.

Wallach O. (1904) Zur Kenntniss der Terpene und der ätherischen Oele LXVII. Ueber einen neuen Fall von optischer Isomerie. Liebig's Ann. Chemie 332, 337-351.

Wallach O. (1908) Untersuchungen aus dem Universitätslaboratorium zu Göttingen XX. Nachr. Gesellsch. Wiss. Göttingen 1908, 253-267. Includes a new synthesis of camphor.

Wallach O. (1910) Untersuchungen aus dem Universitätslaboratorium zu Göttingen XXIV. Nachr. Gesellsch. Wiss. Göttingen 1910, 517-544.

Wallach O. (1914) Die Terpene und Campher, 2nd ed. Veit & Co., Leipzig, 580 p.

Wallach O. and E. Conrady (1889) Ueber das Rotationsvermögen einiger Terpenderivate. Liebig's Ann. Chemie 252, 141-157.

Wallerant F. (1897) Détermination des indices de réfraction des minéraux des roches. Bull. Soc. Fr. Minéral. 20, 234-257.

Wallerant F. (1904) Des macles secondaires et du polymorphisme. Bull. Soc. Fr. Minéral. 27, 169-189.

Wallerant F. (1909) Cristallographie. Librairie Polytechnique, Paris, 523 p.

Wallerius J.G. (1750) Mineralogie, oder Mineralreich. German translation by J.D. Denso. C.G. Nicolai, Berlin, 600 p. Originally published in Swedish in 1747.

Walsh J.W.T. (1958) Photometry, 3rd ed. Constable & Co., London, 544 p.

Walton C.F. (1921) The preparation of rhamnose. J. Am. Chem. Soc. 43, 127-131.

Wanner H. (1900) Photometrische Messungen der Strahlung schwarzer Körper. Ann. Phys. 2, 141-157. See also his paper in Phys. Zeitschr. 1, 226-227.

Wanner H. (1902) Über einen Apparat zur photometrischen Messung hoher Temperaturen. Phys. Zeitschr. 3, 112-114. Diagrams of this instruments may be found in Burgess and Le Chatelier 1912 and other publications, but a somewhat different construction appears in U.S. patent no. 793970 granted to H.W. in 1905.

Warburg O. (1906) Spaltung des Leucinesters durch Pankreasferment. Zeitschr. Physiol. Chemie 48, 205-213.

Ward R. (1980) The Development of the Polarimeter in Relation to Problems in Pure and Applied Chemistry. An Aspect of Nineteenth Century Scientific Instrumentation. D. Phil. thesis, University of London, 336 p.

Warner D.J. (2007) How sweet it is: sugar, science and the state. Ann. Sci. 64, 147-170.

Wartenberg H.v. (1910) Optische Konstanten einiger Elemente. Verh. Deutsch. Phys. Gesellsch. 12, 105-120.

Wartmann É. (1843) Mémoire sur le daltonisme. Mém. Soc. Phys. Hist. Nat. Genève 10, 273-326.

Wartmann É. (1846) Sur de nouveaux rapports entre la chaleur, l'électricité et le magnétisme. Arch. Sci. Phys. Nat. 1, 417-418.

Wartmann É. (1851) Sur la polarisation de la chaleur atmosphérique. Arch. Sci. Phys. Nat. 18, 89-95. Includes description of an instrument with a 7.5 cm long Nicol prism.

[Wasserlein S.] (1882) Saccharometer microscope. J. Royal Microsc. Soc. 2 (part 1), 399. Devices of this kind from Wasserlein and others appear also in price lists appended to editions of H. Frey‘s book: Das Mikroskop in the 1870s.

Watkins & Hill (c. 1838) List of apparatus for the polarisation of light. A 2-p. advertisement in various London journals.

Waugh W.A. and C.G. King (1932) Isolation and identification of Vitamin C. J. Biol. Chem. 97, 325-331.

Wawilow S.J. (1921) The dependence of the intensity of the fluorescence of dyes upon the wave-length of the exciting light. Phil. Mag. 43, 307-320.

Wawilow S.J. (1925) Über polarisiertes Fluorescenzlicht von Farbstofflösungen.V. Zeitschr. Phys. 32, 721-729.

Weber G. (1952) Polarization of the fluorescence of macromolecules 1.-2. Biochem. J. 51, 145-155, 155-167.

Weber L. (1891) Eine neue Montirung des Milchglasplattenphotometers. Zeitschr. Instrumentenk. 11, 6-13.

Websky M. (1858) Ueber die Krystall-Structur des Serpentins und einiger demselben zuzurechnenden Fossilien. Zeitschr. Deutsch. Geol. Gesellsch. 10, 277-293.

Webster D.L. (1916) Experiments on the emission quanta of characteristic X-rays. Phys. Rev. 7, 599-613.

Wedekind E. (1905) Beiträge zur Kenntniss des asymmetrischen Stickstoffs (XIX. Mittheilung). Ber. Deutsch. Chem. Gesellsch. 38, 1838-1844.

Wedgwood T. (1792) Experiments and observations on the production of light from different bodies, by heat and by attrition. Phil. Trans. Royal Soc. 82, 28-47.

Weigert F. (1920) Über die spezifische Wirkung der polarisierten Strahlung. Ann. Phys. 63, 681-725. See also his paper in Naturwiss. 9, 583-588, 1921.

Weigert F. (1921a) Zur Photochemie der Silberverbindungen. Sitzungsber. Akad. Wiss. Berlin 1921(II), 641-650.

Weigert F. (1921b) Ein photochemisches Modell der Retina. Pflüger's Arch. Physiol. 190, 177-197.

Weigert F. (1927) Optische Methoden der Chemie. Akad. Verlagsgesellschaft, Leipzig, 632 + XVI p.

Weigert F. and G. Käppler (1924) Polarisierte Fluorescenz in Farbstofflösungen. Zeitschr. Phys. 25, 99-117.

Weiler J. (1929) Die magnetooptische Bestimmung der Intensitäten der beiden ersten Glieder der Kaliumhauptserie und der Dampfdrucke des Kaliums. Ann. Phys. 1, 361-399.

Weinberg A.A. (1921) Zur Methodik der Nephelometrie. Ein Nephelometer mit konstantem Standard. Biochem. Zeitschr. 125, 292-310.

Weinland E. (1899) Ueber die Lactase des Pankreas. Zeitschr. Biol. 38, 607-617.

Weinschenk E. (1901) Anleitung zum Gebrauch des Polarisationsmikroskops. Herder, Freiburg, 123 p.

Weinschenk E. (1925) Das Polarisationsmikroskop. 5th and 6th ed., expanded by J. Stiny. Herder, Freiburg, 159 p.

Weiss C.S. (1804) Dynamische Ansicht der Krystallisation. Anhang, p. 365-389 in vol. 1 of Lehrbuch der Mineralogie (D.L.G. Karsten´s translation of Hauy's Traité de Minéralogie). Reclam, Paris and Leipzig.

Weiss C.S. (1811) Mémoire sur la détermination du caractère géométrique principal des formes cristallines. J. Mines 29, 349-391, 401-445 (translation of doctoral thesis).

Weiss C.S. (1815) Uebersichtliche Darstellung der verschiedenen natürlichen Abtheilungen der Krystallisationssysteme. Abh. Akad. Wiss. Berlin 1814-15 (Phys.), 289-336. Continued in 1816-17, 286-336.

Weiss C.S. (1836) Über rechts und links gewundene Bergkrystalle. Abh. Akad. Wiss. Berlin 1836, 187-205.

Weiss P. (1907) L'hypothèse du champ moléculaire et la propriété ferromagnétique. J. Phys. 6, 661-690.

Weiss P. and A. Cotton (1907) Mesure du phénomène de Zeeman pour les trois raies bleues du zinc. J. Phys. 6, 429-445.

Weld L.D. (1922) The crystelliptometer. J. Opt. Soc. Am. 6, 67-91.

Welker W.H. and C.S. Williamson (1920) Hemoglobin. I. Optical constants. J. Biol. Chem. 41, 75-79.

Wendell O.C. (1909) Photometric Observations made with the Fifteen Inch East Equatorial during the Years 1892 to 1902. Ann. Harvard Coll. Astron. Observ. 69(I), 97 p. Description of the photometer used is on p. 1-5.

Wernadsky V. (1899) Ueber die Erscheinung der Gleitung in kristallinischen Substanz. Zeitschr. Kristallogr. 31, 519-522, from a Russian publication.

Werner A. (1891) Beiträge zur Theorie der Affinität und Valenz. Vierteljahrsschr. Naturf. Gesellsch. Zürich 36, 129-169.

Werner A. (1893) Beitrag zur Konstitution anorganischer Verbindungen. Zeitschr. Anorg. Chemie 3, 267-330. English translation in Kauffman 1968.

Werner A. (1904) Lehrbuch der Stereochemie. Gustav Fischer, Jena, 474 p.

Werner A. (1906) Les phénomènes d´isomérie en chimie inorganique. Rev. Gén. Sci. 17, 538-546.

Werner A. (1911, 1914) Zur Kenntnis des asymmetrischen Kobaltatoms I. Ber. Deutsch. Chem. Gesellsch. 44, 1887-1898. XII. Über optische Aktivität bei kohlenstofffreien Verbindungen. 47, 3087-3094. Extract in C.R. 159, 426-429. Milestones in his work on metal complexes.

Werner A.G. (1774) Von den Äusserlichen Kennzeichen der Fossilien. S.L. Crusius, Leipzig, 302 p. On Iceland spar p. 235-241.

Wernicke W. (1885) Ueber die Phasenänderungen bei der Reflexion und über die Schwingungsebene des polarisirten Lichtes. Ann. Phys. 25, 203-232.

Wertheim G. (1851) Mémoire sur la polarisation chromatique produite par le verre comprimé. Comptes Rendus Acad. Sci. Fr. 32, 289-292. Note sur la double réfraction artificiellement produite dans les cristaux du système régulier. 33, 576-579. More in 35, 276-278, 1852.

Wertheim G. (1854) Sur la double réfraction temporairement produite dans les corps isotropes, et sur la relation entre l'élasticité mécanique et entre l'élasticité optique. Ann. Chim. 40, 156-221, translated for the most part in Phil. Mag. 8, 241-261 and 342-357. Photoelasticity, see also Bravais 1855.

West C.D. (1945) A method of growing oriented sections of certain optical crystals. J. Opt. Soc. Am. 35, 26-31. Presumably crystals for Polaroid Corp.´s Optical Ring Sight, see also U.S. patents no. 2,424,679 and 680.

West C.D. and R.C. Jones (1951) On the properties of polarization elements as used in optical instruments, I. J. Opt. Soc. Am. 41, 976-982.

Westfeld C.F.G. (1767) Mineralogische Abhandlungen, Stück I. Dieterich, Göttingen and Gotha, 72 p.

Weyl W.A. (1953) Synthetic minerals. Econ. Geol. 48, 288-305.

Wheatstone C. (1848) On a means of determining the apparent solar time by the diurnal changes of the plane of polarization at the north pole of the sky. British Assoc. Report 18, pt. ii, 10-12.

Wheatstone C. (1871) Experiments on the successive polarization of light, with the description of a new polarizing apparatus. Proc. Royal Soc. 19, 381-389.

Wheeler H.J. and B. Tollens (1889) Über die Xylose oder den Holzzucker, eine zweite penta-Glykose. Liebig's Ann. Chemie 254, 304-320. More 320-333, and by C. Schulze and B.T. in 271, 40-46, 1892.

Wherry E.T. and E. Yanovsky (1918) The identification of the cinchona alkaloids by optical-crystallographic measurements. J. Am. Chem. Soc. 40, 1063-1074.

White C.P. (1909) On the occurrence of crystals in tumours. J. Pathol. Bacteriol. 13, 3-10.

White M.C. (1858) Application of polarized light to the microscope. Am. J. Sci. 76, 391-392.

Whitlock H.P. (1915) A critical discussion of the crystal forms of calcite. Proc. Am. Acad. 50, 289-352.

Whittaker E.T. (1951) A History of the Theories of Aether and Electricity, revised and enlarged edition, I. Thomas Nelson, London, 434 p.

Wiechmann F.G. (1890, 1914) Sugar Analysis. J. Wiley & Sons, New York, 187 p. Third edition, 307 p.

Wiechmann F.G. (1892) Estimation of a mixture of saccharose, dextrose and levulose. School of Mines Quarterly (N.Y.) 13, 197-208.

Wiedeburg O. (1890) Ueber die Hydrodiffusion. Ann. Phys. 41, 675-711.

Wiedemann E. (1889) Zur Mechanik der Leuchtens. Ann. Phys. 37, 177-248.

Wiedemann G. (1849) Ueber das elektrische Verhalten krystallinischer Körper. Ann. Phys. 76, 404-412 and 77, 534-536. Includes Iceland spar, cf. C.R. 30, 110-112, 1850.

Wiedemann G. (1851) Ueber die Drehung der Polarisationsebene des Lichtes durch den galvanischen Strom. Ann. Phys. 82, 215-232. Research on the Faraday effect.

Wieland H. and H. Sorge (1916) Untersuchungen über die Gallensäuren. II. Zur Kenntnis der Choleinsäure. Zeitschr. Physiol. Chemie 97, 1-27.

Wieland H. and P. Weyland (1920) Untersuchungen über die Gallensäuren. VIII. Zur Kenntnis der Lithocholsäure. Zeitschr. Physiol. Chemie 110, 123-142.

Wieland H. and M. Asano (1929) Zur Kenntnis der Sterine der Hefe. Liebig's Ann. Chemie 473, 300-313.

Wien W. (1898) Ueber die Fragen, welche die translatorische Bewegung des Lichtäthers betreffen. Verh. Deutsch. Naturf. Ärzte 1898, Th. 2, Hälfte 1, 49-56.

Wien-Harms (1928) Handbuch der Experimentalphysik, Band 18: Wellenoptik und Polarisation. Akademische Verlagsgesellsch., Leipzig, 674 p.

Wiener O. (1890) Stehende Lichtwellen und die Schwingungsrichtung polarisirten Lichtes. Ann. Phys. 40, 203-243, 744. Important experiment in electromagnetism.

Wiener O. (1904) Lamellare Doppelbrechung, Phys. Zeitschr. 5, 332-338. See also subsequent papers by him on the subject in the Leipzig Berichte and Abhandlungen.

Wierzuchowski M. (1926) Intermediary carbohydrate metabolism I. Influence of insulin on levulose and glucose intravenously administered. J. Biol. Chem. 68, 631-652.

Wiesner J. (1886) Untersuchungen über die Organisation der vegetabilischen Zellhaut. Sitzungsber. Akad. Wiss. Wien 93(1), 17-80.

Wigand A. (1913) Das ultraviolette Ende des Sonnenspektrums in verschiedenen Höhen bis 9000 m. Phys. Zeitschr. 14, 1144-1148.

Wightman E.P., A.P.H. Trivelli and S.E. Sheppard (1923) The size-frequency distribution of grains of silver halide in photographic emulsions and its relation to sensitometric characteristics, V. J. Phys. Chem. 27, 466-480.

Wild H. (1856) Ueber ein neues Photometer und Polarimeter nebst einigen damit angestellten Beobachtungen. Ann. Phys. 99, 235-274.

Wild H. (1863) Photometrische Untersuchungen. Ann. Phys. 118, 193-240.

Wild H. (1864) Ueber ein neues Saccharimeter. Ann. Phys. 122, 626-630.

Wild H. (1865) Ueber ein Neues Polaristrobometer (Saccharimeter, Diabetometer). Haller, Berne, 66 p.

Wild H. (1870) Über die neueste Gestalt meines Polaristrobometers (Saccharimeter, Diabetometer). Bull. Acad. Impér. Sci. St.-Pétersb. 14, 149-163.

Wild H. (1876) Photometrische Bestimmung des diffusen Himmelslichtes. Bull. Acad. Impér. Sci. St.-Pétersb. 21, 312-350, continued in 23, 290-305, 1877.

Wild H. (1883) Ueber die Umwandlung meines Photometers in ein Spectro-Photometer. Ann. Phys. 20, 452-468. See also a paper by W. Möller in 24, 446-454, 1885.

Wild H. (1888, 1890) Polarisations-Photometer für technische Zwecke und Untersuchung von Wenham-Gaslampen mit demselben. Bull. Acad. Impér. Sci. St.-Pétersb. 32, 193-218 and 33, 5-8.

Wild H. (1898) Verbesserung des Polaristrobometers. Vierteljahrsschr. Naturf. Gesellsch. Zürich 43, 57-80 óh. More in 44, 136-156, 1899.

Wilde E. (1853) Ueber die epoptischen Farben der einaxigen Crystalle in circular-polarisirten Lichte. Ann. Phys. 89, 99-114, 197-223.

Wiley H.W. (1880) The rotatory power of commercial glucose and grape sugar. A method of determining the amount of reducing substance present by the polariscope. Proc. Am. Assoc. Advancem. Sci. 1880, 308-323, also in J. Am. Chem. Soc. 2.

Wiley H.W. (1884) Determinations of lactose in milks by optical methods. Am. Chem. J. 6, 289-302.

Wiley H.W. (1891) Pine tree sugar. J. Am. Chem. Soc. 13, 228-237.

Wiley H.W. and E. Ewell (1896) Determination of lactose in milks by double dilution and polarization. J. Am. Chem. Soc. 18, 428-433, 1111-1112.

Wilhelmy L. (1850) Ueber das Gesetz, nach welchem die Einwirkung der Säuren auf den Rohrzucker stattfindet. Ann. Phys. 81, 413-428, 499-526, see also 527-532.

Wilke E. and H. Handovsky (1913) Untersuchungen am Tyndallphänomen. Ann. Phys. 42, 1145-1153.

Will W. (1885) Ueber das Naringin. Ber. Deutsch. Chem. Gesellsch. 18, 1311-1325. More in 20, 294-304, 1186-1190, 1887.

Will W. and G. Bredig (1888) Umwandlung von Hyoscyamin in Atropin durch Basen. Beitrag zur Kenntniss der Massenwirkung. Ber. Deutsch. Chem. Gesellsch. 21, 2777-2797, see also p. 1717-1726.

Willaman J.J. (1918) An optical method for the determination of malic and tartaric acids in the same solutions. J. Am. Chem. Soc. 40, 693-704.

Willaman J.J. (1922) The preparation of inulin, with special reference to artichoke tubers as a source. J. Biol. Chem. 51, 275-283.

Willard H.H. and A.W. Boldyreff (1930) The determination of calcium by ignition of calcium oxalate to carbonate in air. J. Am. Chem. Soc. 52, 1888-1892.

Williams G.H. (1886) Modern Petrography. D.C. Heath & Co., Boston, 35 p.

Williams G.H. (1888) On a new petrographical microscope of American manufacture. Am. J. Sci. 35, 114-117.

Williams J. (1863) A few words more on Benjamin Martin. Trans. Microsc. Soc. London 11, 1-4.

Williams J.H. (1931) An experimental study of the natural widths of the X-ray lines in the L-series spectrum of uranium. Phys. Rev. 37, 1431-1442.

Williamson C.S. (1916) Influence on age and sex on hemoglobin. Arch. Internal Medicine 18, 505-528.

Willigen V.S.M. van der (1869) Sur la réfraction du quartz et du spath d´Islande. Arch. Mus. Teyler 2, 153-182, abstract in Arch. Néerl. 4, 451-460. More on the refractive indices of quartz and calcite is in Arch. Mus. Teyler 3, 34-54, 1874.

Willstätter R. (1914) Über die Farbstoffe der Blüten und Früchte. Sitzungsber. Akad. Wiss. Berlin 1914(I), 402-411.

Willstätter R. (1915) Untersuchungen über die Anthocyane. Liebig’s Ann. Chemie 408, 1-162. A series of ten papers on plant pigments, with various co-authors.

Willstätter R. and A. Bode (1902) Synthese von r-Cocaïn. Liebig’s Ann. Chemie 326, 42-78.

Willstätter R. and W. Marx (1904) Lupinidin und Spartein. Ber. Deutsch. Chem. Gesellsch. 37, 2351-2357.

Willstätter R. and L. Zechmeister (1913) Zur Kenntnis der Hydrolyse von Cellulose. I. Ber. Deutsch. Chem. Gesellsch. 46, 2401-2412.

Willstätter R. and R. Kuhn (1923) Über Masseinheiten der Enzyme. Ber. Deutsch. Chem. Gesellsch. 56, 509-512.

Willstätter R., T. Oppenheimer and W. Steibelt (1920) Über Maltaselösungen aus Hefe. Zeitschr. Physiol. Chemie 110, 232-240. More in 115, 1921.

Willstätter R., O. Wolfes and H. Mäder (1923) Synthese des natürlichen Cocains. Liebig’s Ann. Chemie 434, 111-139. Much preparatory work for this synthesis was carried out during World War I. See also German patent no. 389,359 1924 by E. Merck.

Wilsing J. and J. Scheiner (1909a) Temperaturbestimmung von 109 helleren Sternen aus spektralphotometrischen Beobachtungen. Publ. Astrophys. Observ. Potsdam 19(1) no. 56, 221 p. Extract in Astron. Nachr. 183, 97-108, see also C.G. Abbot in Astrophys. J. 31, 274-278. More results by them and W. Münch are presented in no. 74, 1919, 78 p.

Wilsing J. and J. Scheiner (1909b) Vergleichende photometrische Beobachtungen am Monde und an Gesteinen… Publ. Astrophys. Observ. Potsdam 20(4) no. 61, 68 p.

Wilsing J. and J. Scheiner (1921) Spektralphotometrische Messungen an Gesteinen, am Mond, Mars und Jupiter. Publ. Astrophys. Observ. Potsdam no. 77, 74 p.

Wilsing J., J. Scheiner and W. Münch (1919) Effektive Temperaturen von 199 helleren Sternen nach spektralphotometrischen Messungen. Publ. Astrophys. Observ. Potsdam 24(1) no. 74, 78 p. See also no. 76, 1920 and Handbuch der Physik 19, p. 185-187, 1928.

Wilson E.G. and W.R.G. Atkins (1916) Methods for the estimation of mixtures of four or more carbohydrates, involving oxidation with bromine. Biochem. J. 10, 504-521.

Wilson W.E. (1994) The History of Mineral Collecting 1530-1799. The Mineralogical Record 25(6), 264 p. Very interesting compilation.

Winchell N.H. (1889) American petrographical microscopes. Am. Geologist 3, 225-230. See Am. Monthly Microsc. J. 7, 10-11, 1886 on Bulloch's Lithological Microscope.

Windaus A. (1916) Überführung des Cholesterins in Koprosterin. Ber. Deutsch. Chem. Gesellsch. 49, 1724-1734.

Windaus A. and A. Hauth (1907) Notiz über Phytosterin. Ber. Deutsch. Chem. Gesellsch. 40, 3681-3686.

Windaus A. and E. Rahlén (1918) Beitrag zur Kenntnis des Sitosterins. Zeitschr. Physiol. Chemie 101, 223-235.

Windaus A. and O. Linsert (1928) Über die Ultraviolett-Bestrahlung des Dehydro-ergosterins. Liebig's Ann. Chemie 465, 148-166. See also A.W.'s Nobel lecture, 1928.

Winkelmann A. (editor, 1906) Handbuch der Physik, 2nd ed., vol. 6. Optik. J.A. Barth, Leipzig, 1404 p.

Winkler L.W. (1916) Water analysis. III. Zeitschr. Angew. Chemie 29(i), 218-220.

Winter L.B. and W. Smith (1923) On a possible mode of causation of diabetes mellitus. British Medical J. 1923(1), 12-13. Some problems of diabetes mellitus, 711-715.

Winterstein A. (1934) Carotinoide. In: Fortschritte der Physiologischen Chemie 1929-1934 (a collection of reprints from Angewandte Chemie 47), 91-100 and chart. Verlag Chemie, Berlin.

Winterstein E. (1893) Ueber das pflanzliche Amyloid. Zeitschr. Physiol. Chemie 17, 353-380.

Winterstein E. (1894a) Zur Kenntniss der Trehalose. Zeitschr. Physiol. Chemie 19, 70-83.

Winterstein E. (1894b) Ueber ein stickstoffhaltiges Spaltungsproduct der Pilzcellulose. Ber. Deutsch. Chem. Gesellsch. 27, 3113-3115. More in 28, 167-169, 1895.

Winther C. (1907) Bidrag til den optiske Drejnings Teori. Doctoral thesis, Copenhagen University. J. Gjellerup, Copenhagen, 142 p.

Winton A.L. (1899) A convenient micro-polariscope for food examination. J. Applied Microscopy 2, 550-551.

Wise L.E. and E.Q. Adams (1918) Photographic sensitizing dyes: their synthesis and absorption spectra. J. Ind. Eng. Chem. 10, 801-802. More in 11, 460-463, 1919.

Wislicenus J. (1873) Ueber die isomeren Milchsäuren. Liebig's Ann. Chemie 166, 3-64 and 167, 302-346.

Wislicenus J. (1888) Ueber die räumliche Anordnung der Atome in organischen Molekülen und ihre Bestimmung in geometrisch-isomeren ungesättigten Verbindungen. Abh. Math.-Phys. Kl. Kön. Sächs. Gesellsch. Wiss. 14, 1-78.

Wittig G. (1930) Stereochemie. Akademische Verlagsgesellschaft, Leipzig, 388 p.

Wohl A. (1893) Abbau des Traubenzuckers. Ber. Deutsch. Chem. Gesellsch. 26, 730-744.

Wohl A. (1899) Abbau der l-Arabinose. Ber. Deutsch. Chem. Gesellsch. 32, 3666-3672.

Wohl A. and K. Freudenberg (1923) Die Bezeichnung sterischer Reihen. Ber. Deutsch. Chem. Gesellsch. 56, 309-313.

Wohlgemuth J. (1902-03) Ueber das Nucleoproteid der Leber. I. Zeitschr. Physiol. Chemie 37, 475-483.

Wolff C.H. (1881) Zur Prüfung des Chinin.muriatic. Arch. Pharmazie 219, 1-12.

Wolffenstein R. (1894) Über Coniumalkaloide. Ber. Deutsch. Chem. Gesellsch. 27, 2611-2615, 2615-2621. More in 28, 302-305, 1895.

Wölffing E. (1902) Bericht über den gegenwärtigen Stand der Lehre von der Fresnelschen Wellenfläche. Biblioth. Mathem. 3, 361-382.

Wollaston W.H. (1802a,b) A method of examining refractive and dispersive powers, by prismatic reflexion, Phil. Trans. Royal Soc. 92, 365-380. On the oblique refraction of Iceland crystal, 381-386.

Wollaston W.H. (1809) Description of a reflective goniometer. Phil. Trans. Royal Soc. 99, 253-258.

Wollaston W.H. (1812) On the primitive crystals of carbonate of lime, bitter-spar and iron-spar. Phil. Trans. Royal Soc. 102, 159-162. See also his On the elementary particles of certain crystals, 103, 51-63, 1813.

Wollaston W.H. (1820) On the methods of cutting rock crystal for micrometers. Phil. Trans. Royal Soc. 110, 126-131. Wollaston´s double-image prism is described here.

Wood E.A. (1977) Crystals and Light, 2nd ed. Dover Publ., New York, 156 p.

Wood R.W. (1900) The problem of the daylight observation of the corona. Astrophys. J. 12, 281-286, continued in 13, 68-79, 1901. Cf. P. Joubin, C.R. 130, 1597-1599, 1900.

Wood R.W. (1905a) Physical Optics. Macmillan, New York, 546 p.

Wood R.W. (1905b) The magneto-optics of sodium vapour and the rotatory dispersion formula. Proc. Phys. Soc. 19, 742-763.

Wood R.W. (1906) Fluorescence and Lambert's Law. Phil. Mag. 11, 782-788.

Wood R.W. (1928) The Raman spectra of scattered radiation. Phil. Mag. 6, 729-743.

Wood R.W. and F.E. Hackett (1909) The resonance and magnetic rotation spectra of sodium vapor photographed with the concave grating. Astrophys. J. 30, 339-372.

Wood R.W. and L. Dunoyer (1914) The separate excitation of the centres of emission of the D lines of sodium. Phil. Mag. 27, 1018-1025, see also R.W.'s paper 524-530.

Wood R.W. and F.L. Mohler (1918) Resonance radiation of sodium vapor excited by one of the D lines. Phys. Rev. 11, 70-80.

Wood R.W. and A. Ellett (1923, 1924) On the influence of magnetic fields on the polarisation of resonance radiation. Proc. Royal Soc. A103, 396-403. Polarized resonance radiation in weak magnetic fields. Phys. Rev. 24, 243-254.

Woodward C. (1848) A Familiar Introduction to the Study of Polarized Light. J. van Voorst, London (for Smith & Beck), 40 p. New editions appeared in 1851 and 1861.

Wooster W.A. (1957) Experimental Crystal Physics. Oxford University Press, 115 p.

Worley F. P. (1912) Studies of the processes operative in solutions. XXI. The hydrolysis of cane sugar by dilute acids. Proc. Royal Soc. A87, 555-563. XXII, 563-581.

Worley F.P. and J.C. Andrews (1927, 1928) Mutarotation I-IV. J. Phys. Chem. 31, 742-746, 882-885, 1880-1883 and 32, 307-315.

Worm-Müller J. (1885) Die Bestimmung des Traubenzucker im Harne mittelst des Soleil-Ventzke'schen Polarimeters und die linksdrehenden Substanzen. Pflüger's Arch. Physiol. 35, 76-108. His tests on diabetic persons are described in 36, 172-208.

Woronkoff G.P. and G.J. Pokrowski (1923) Über die selektive Reflexion des Lichtes an diffus reflektierenden Körpern. Zeitschr. Phys. 20, 358-370.

Wright F.E. (1908a,b) On the measurement of extinction angles in the thin section. Am. J. Sci. 26, 349-390. The bi-quartz wedge applied to polarimeters and saccharimeters, 391-398. Refers to the polarimeter of F. Bates 1908.

Wright F.E. (1910, 1911a) A new petrographic microscope. Am. J. Sci. 29, 407-414. Neuere Verbesserungen am petrographischen Mikroskop. Centralbl. Mineral. 1911, 555-559, 581-588.

Wright F.E. (1911b) The Methods of Petrographic-Microscopic Research. Carnegie Institution of Washington Publication No. 158, 204 p.

Wright F.E. (1913a,b) A new thermal microscope for the measurement of the optical constants of minerals at high temperatures, J. Wash. Acad. Sci. 3, 232-6. An electrical goniometer furnace for the measurement of crystal angles and of refractive indices at high temperatures. 396-401.

Wright F.E. (1916) The petrographic microscope in analysis. J. Am. Chem. Soc. 38, 1647-1658.

Wright F.E. (1919a) Polarization photometer prisms. J. Opt. Soc. Am. 2-3, 93-96.

Wright F.E. (1919b) Polarized light in the study of ores and metals. Proc. Am. Philos. Soc. 58, 401-447. Abbreviated in Mining and Metallurgy no. 158, 1-12, 1920.

Wright F.E. (1921) The Manufacture of Optical Glass and of Optical Systems. Ordnance Department Document No. 2037. Government Printing Office, Washington, 309 p.

Wright F.E. (1927a,b) Polarization of light reflected from rough surfaces with special reference to light reflected by the Moon. Proc. Nat. Acad. Sci. 13, 535-540. A polarization photometer eyepiece. J. Opt. Soc. Am. 14, 339-341.

Wright F.E. (1934) An eyepiece for measuring the plane-polarization in a beam of light. J. Opt. Soc. Am. 24, 206-216.

Wright H. (1900) Die diffuse Reflexion des Lichtes an matten Oberflächen. Ann. Phys. 1, 17-41.

Wright L.A. (1950) Calcite (optical). In: Mineral Commodities of California, California Division of Mines Bulletin 156, 136-138. Revised in Bulletin 176, 99-100, 1957.

Wright W.D. (1932) Some principles governing the design of Kerr cells. Proc. Phys. Soc. 44, 325-335. Continued in 45, 469-475, 1933. On television applications.

Wroblewski S. v. (1881) Ueber die Anwendung der Photometrie auf das Studium der Diffusionserscheinungen bei den Flüssigkeiten. Ann. Phys. 13, 606-623. More in a paper by O. Wiedeburg in 41, 675-711, 1890.

Wulff L. (1895) Morphologie des Natronsalpeters. Sitzungsber. Akad. Wiss. Berlin 1895, 715-732. Continuation, describing various problems with crystal growing: 135-146 and 879-886, 1896.

Wulff L. (1897) Ueber die Verwendung doppeltbrechender Krystallsubstanz. Zeitschr. Instrumentenk. 17, 292-298.

Wülfing E.A. (1898) Die Theorie der Beobachtung im konvergenten Licht und Vorschläge zur Verbesserung der Achsenwinkelapparate. N. Jahrb. Mineral. Beilageb. 12, 405-446.

Wülfing E.A. (1911) Über Projektion mikroskopischer Objekte insbesondere im polarisierten Licht. Sitzungsber. Heidelb. Akad. Math.-Naturw. Klasse 36, 40 p.

Wülfing E.A. (1918) Ein neues Polarisationsmikroskop. Abh. Heidelb. Akad. Wiss., Math.-Nat. Kl. 6, 79 p.

Wurtz A. (1857) Note sur l'acide caproïque. Ann. Chim. 51, 358-361.

Wyckoff R.W.G. (1920) The crystal structure of some carbonates of the calcite group. Am. J. Sci. 50, 317-360. X-ray work.

Wyckoff R.W.G. (1922) The Analytical Expression of the Results of the Theory of Space-Groups. Carnegie Institution of Washington Publ. No. 318, 180 p.

Wyckoff R.W.G. (1924) The Structure of Crystals. Chemical Catalog Co., New York, 462 p.

Wyckoff R.W.G. (1926) X-Ray Diffraction Data from Crystals and Liquids. Carnegie Institution of Washington, Geophysical Laboratory Papers No. 603.

Wythe J.H. (1851) The Microscopist. Lindsay & Blakiston, Philadelphia, 191 p.

Yarwood J. (1963) Atomic Physics, 2nd ed. University Tutorial Press, London, 656 p.

Yoder P.A. (1911) A polariscopic method for the determination of malic acid and its application in cane and maple products. J. Ind. Eng. Chem. 3, 563-574.

Yoshikawa J. (1913) Über die quantitative Bestimmung der d-Milchsäure in den Körperflüssigkeiten und den Organen. Zeitschr. Physiol. Chemie 87, 382-417.

Young D.A. (2003) Mind over Magma. The Story of Igneous Petrology. Princeton University Press, Princeton, 686 p.

Young E.G. (1922) On the optical rotatory power of crystalline ovalbumin and serum albumin. Proc. Royal Soc. B93, 15-35.

Young T. (1802) The Bakerian lecture. On the theory of light and colours. Phil. Trans. Royal Soc. 92, 12-48. An account of some cases of the production of colours not hitherto described, 387-397. Continued in 94, 1-16, 1804.

Young T. (1807) A Course of Lectures on Natural Philosophy and the Mechanical Arts. I. J. Johnson, London, 796 p. and 43 plates.

Young T. (1810) Anonymous discussion of a paper by P. Laplace on the law of extraordinary refraction in diaphanous crystals. Quart. Rev. 2, 337-348.

Young T. (1810) Anonymous discussion of papers by P. S. de Laplace and E.L. Malus on the motion of light in diaphanous media. Edinb. Rev. 15, 422-430 and Quart. Rev. 3, 471-477.

Young T. (1814) Anonymous review of recent publications by Malus, Biot, Seebeck and Brewster. Quart. Rev. 11, 42-56. Here, Young explains the colors of thin crystalline films in parallel polarized light in terms of wave interference.

Young T. (1817) Chromatics. An entry in a Supplement volume to the 6th edition of Encyclopaedia Britannica. Reprinted in vol. I of Miscellaneous Works of the Late Thomas Young, M.D., F.R.S., ed. by G. Peacock, 279-342. J. Murray, London.

Young W.J. (1909) The hexosephosphate formed by yeast-juice from hexose and phosphate. Proc. Royal Soc. B81, 528-545.

Yvon G. and J. Duboscq (1880) Diabétomètre à pénombres. J. Pharm. 2, 98-100.

Zahn W.v. (1874, 1878) Über die photometrische Vergleichung verschiedenfarbiger Lichtquellen. Sitzungsber. Naturf. Gesellsch. Leipzig 1, 25-29. Über ein Spectro-Photometer, 5, 1-4.

Zakrzewski C. and C. Kraft (1905) Sur les directions principales dans les liquides biréfringents par l'effet du mouvement. Bull. Int. Acad. Sci. Crac. 1905, 506-520.

Zeeman P. (1897a) The effect of magnetisation on the nature of light emitted by a substance. Nature 55, 347 (translated from Verh. Phys. Gesellsch. Berlin 1896). First description of the Zeeman effect: includes observations of polarization. See also Phil. Mag. 43, 226-239.

Zeeman P. (1897b) Doublets and triplets in the spectrum produced by external magnetic forces. Phil. Mag. 44, 55-60 and 255-259. Abstract in Comptes Rendus Acad. Sci. Fr. 124, 1444-1445.

Zeeman P. (1909) The degree of completeness of the circular polarization of magnetically divided lines. Proc. Royal Acad. Amsterdam 12, 345-356.

Zeeman P. and T.L. de Bruin (1927) Magnetische Zerlegung der Spektrallinien. In: Handbuch der Physikalischen Optik II (ed. E. Gehrcke), 595-682.

Zehnder L. (1908a) Über ein neues Halbschattenpolarimeter. Ann. Phys. 26, 985-997.

Zehnder L. (1908b) Über die Polarisation des Lichtes bei der Glasreflexion. Ann. Phys. 26, 998-1018.

Firma Carl Zeiss (1927) Farbmesser. German patent no. 447,599, 4 p.

Zeitschr. Deutsch. Geol. Gesellsch. (1888) [Notes on a meeting discussing Iceland spar shortage. 40, 189; see also in Anhang, 191-193]. Reproduced in Zeitschr. Instrumentenk. 8, 63-65.

Zemiatcenskij P. (1902) Die Kalkspatlagerstätte am Berge Celebi-jaurn-beli in der Umgegend des Baidar-Tores. Zeitschr. Kristallogr. 36, 598-605. See N. Jahrb. Mineral. 1903(2), 174-175 regarding this paper and another one: Der Calcit vom Berge Foros und die ersten russischen Nicols, from 1901. Cf. however Sokolow 1898 on Russian Nicol prisms made a few years earlier.

Zemplén G. (1913) Beiträge zur partiellen Hydrolyse der Cellulose. Zeitschr. Physiol. Chemie 85, 180-191.
Zenger Ch.-V. (1889) La spectroscopie de l'invisible. C.R. Assoc. Fr. 18, 339-341. La spectrophotographie des parties invisibles du spectre solaire. Comptes Rendus Acad. Sci. Fr. 109, 434-436.
Zerner E. and R. Waltuch (1914) Zur Kenntnis der Pentosurie. Monatsh. Chemie 35, 1025-1036.
Zernike F. (1916) The clustering tendency of the molecules in the critical state and the extinction of light caused thereby. Proc. Kon. Akad. Wet. Amst. 18, 1520-1527.
Zeynek R. v. (1899) Neue Beobachtungen und Versuche über das Methämoglobin und seine Bildungsweise. Arch. Physiol. 1899, 460-490.
Zhaochang S. (1994) Gigantic and supergigantic clusters of Iceland-spar calcite. Mechanism of formation. Carsologica Sinica 13, 383-394. (T. Krassmann, pers. comm.)
Ziggelaar A. (1980) How did the wave theory of light take shape in the mind of Christiaan Huygens? Ann. Sci. 37, 179-187.
Zippe F.X.M. (1852) Uebersicht der Krystallgestalten des rhomboedrischen Kalk-haloides. Denkschr. Akad. Wiss. Wien 3, 109-190 and 7 plates.
Zirkel F. (1863) Mikroskopische Gesteinsstudien. Sitzungsber. Akad. Wiss. Wien 47(1), 226-270. Extract in Ann. Phys. 119, 288-297, 644.
Zirkel F. (1866) Lehrbuch der Petrographie I-II. A. Marcus, Bonn, 607 + 635 p.
Zirkel F. (1873) Die Mikroskopische Beschaffenheit der Mineralien und Gesteine. W. Engelmann, Leipzig, 502 p.
Zirkel F. (1876) Microscopical petrography. In C. King (ed.): Report of the Geological Exploration of the Fortieth Parallel, VI. Government Printing Office, Washington, 297 p.
Zirkl E. (1961) Übersicht der Entwicklung von Polarisatoren. Mineral. Petrogr. Mitt. 7, 484-487.
Zocher H. (1925) Die optischen Methoden zur Untersuchung der Anisotropie in Kolloiden. Kolloid-Zeitschr. 37, 336-351. Includes flow birefringence.
Zöllner F. (1860) Photometrische Untersuchungen. Ann. Phys. 109, 244-275.
Zöllner F. (1861, 1865) His astrophotometer and colorimeter is first described in his book: Grundzüge einer Allgemeinen Photometrie des Himmels. Mitscher & Röstell, Berlin, 102 p. An improved version appears in his Photometrische Untersuchungen mit Besonderer Rücksicht auf die Physische Beschaffenheit der Himmelskörper. Engelmann, Leipzig, 322 p.
Zöllner F. (1866) Resultate photometrischer Beobachtungen an Himmelskörpern. Ann. Phys. 128, 260-269. Here and in an anonymous article: Zöllner´s Astrophotometer, in Carl's Repertorium 1, 187-199, three photometers with Nicol prisms are described.
Zöllner F. (1868) Ueber Farbenbestimmung der Gestirne. Ann. Phys. 135, 59-74. Describes an artificial star device of variable color, using a quartz plate and Nicols.
Zschimmer E. and H. Schulz (1913) Die Doppelbrechung optischer Gläser in Abhängigkeit von ihrer chemischen Zusammensetzung und Form. Ann. Phys. 42, 345-396. Relates to use of Nicol prisms to detect strains in optical glasses.
Zsigmondy R. (1901) Ueber die Absorption des Lichtes in Farbgläsern. Ann. Phys. 4, 60-71. See also Siedentopf and Zsigmondy 1903.
Zsigmondy R. (1925) Kolloidchemie, Teil I, 5th ed. O. Spamer, Leipzig, 246 p.
Zurhellen W. (1914) Zur Frage der astronomischen Kriterien für die Konstanz der Lichtgeschwindigkeit. Astron. Nachr. 198, 1-10.
Zworykin V., L.B. Lynn and C.R. Hanna (1928) Kerr cell method of recording sound. Trans. Soc. Motion Pict. Eng. 12, 748-759.

Contents